查询2SD1795供应商 捷多邦，专业PCB打样工厂，24小时加急出货

Silicon NPN Power Transistors 2SD1795

DESCRIPTION

- With ITO-220 package
- Switching power transistor
- DARLINGTON

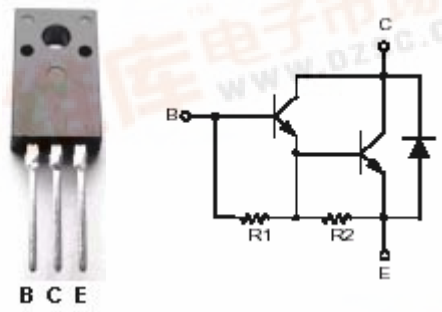

Fig.1 simplified outline (ITO-220) and symbol

PINNING

PIN	DESCRIPTION
1	Base
2	Collector
3	Emitter

Absolute maximum ratings(T_a=25℃)

SYMBOL	PARAMETER	CONDITIONS	VALUE	UNIT
V_{CBO}	Collector-base voltage	Open emitter	500	V
V_{CEO}	Collector-emitter voltage	Open base	400	V
V_{EBO}	Emitter-base voltage	Open collector	12	V
I_C	Collector current		10	A
I_{CM}	Collector current-Peak		15	A
I_B	Base current		0.5	A
I_{BM}	Base current-Peak		1.0	A
P_T	Total power dissipation	T_C=25℃	50	W
T_j	Junction temperature		150	℃
T_{stg}	Storage temperature		-55~150	℃

THERMAL CHARACTERISTICS

SYMBOL	PARAMETER	MAX	UNIT
$R_{th\ j\text{-}C}$	Thermal resistance junction to case	2.5	℃/W

找PDF 维库一下 pdf.dzsc.com

CHARACTERISTICS

Tj=25℃ unless otherwise specified

SYMBOL	PARAMETER	CONDITIONS	MIN	TYP.	MAX	UNIT
$V_{CEO(SUS)}$	Collector-emitter sustaining voltage	I_C=10mA; I_B=0	400			V
$V_{CE(sat)}$	Collector-emitter saturation voltage	I_C=7A; I_B=70mA			1.5	V
$V_{BE(sat)}$	Base-emitter saturation voltage	I_C=7A; I_B=70mA			2.0	V
I_{CBO}	Collector cut-off current	V_{CB}=500V; I_E=0			0.1	mA
I_{CEO}	Collector cut-off current	V_{CE}=400V; I_B=0			0.1	mA
I_{EBO}	Emitter cut-off current	V_{EB}=12V; I_C=0			100	mA
h_{FE}	DC current gain	I_C=7A ; V_{CE}=2V	150			
f_T	Transition frequency	I_C=1A ; V_{CE}=10V		10		MHz

Switching times

t_{on}	Turn-on time	I_C=7A;I_{B1}=I_{B2}=70mA, R_L=10Ω ;V_{BB2}=4V			2.0	μs
t_s	Storage time				15	μs
t_f	Fall time				15	μs

PACKAGE OUTLINE

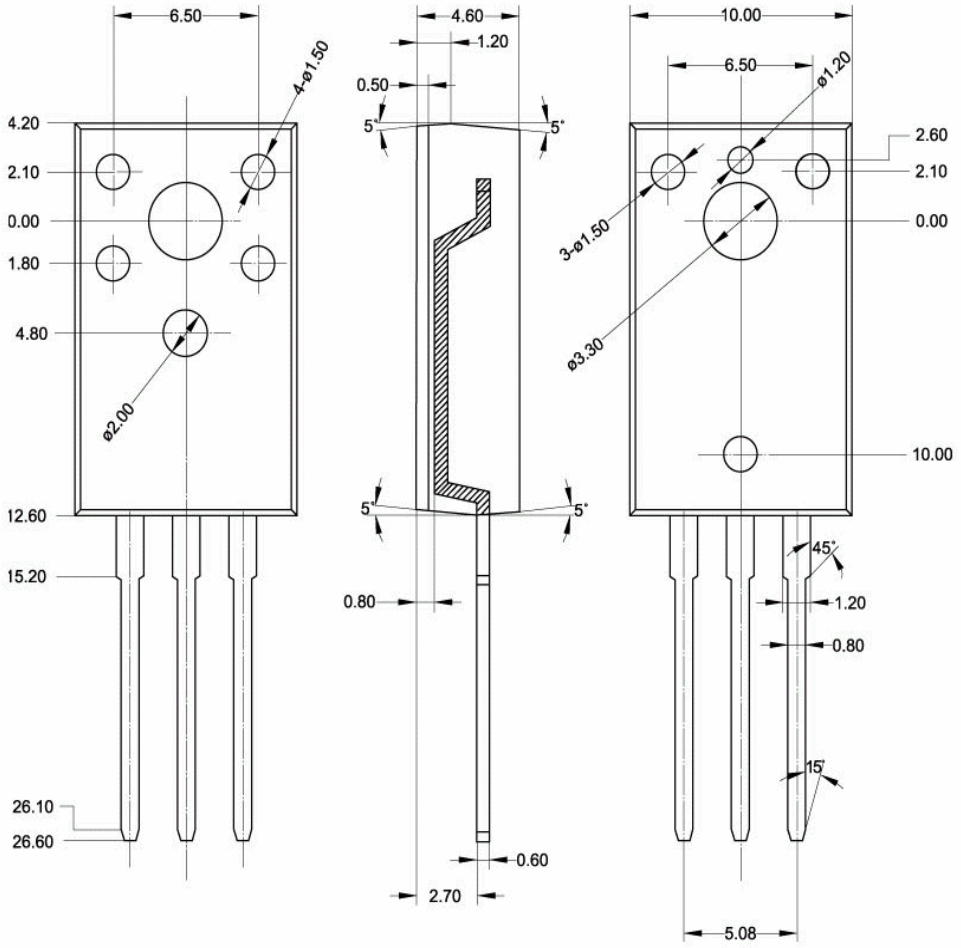

Fig.2 Outline dimensions (unindicated tolerance:±0.20 mm)