查询2SD2539供应商 捷多邦，专业PCB打样工厂，24小时加急出货

Silicon NPN Power Transistors 2SD2539

DESCRIPTION

- With TO-3P(H)IS package
- High voltage ;high speed
- Low saturation voltage
- Bult-in damper diode

APPLICATIONS

- Horizontal deflection output for color TV

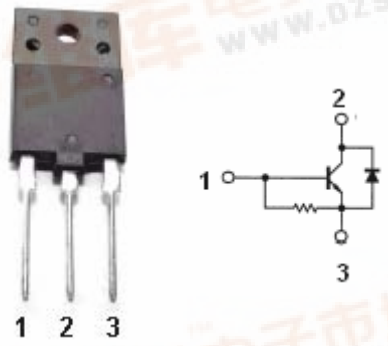

Fig.1 simplified outline (TO-3P(H)IS) and symbol

PINNING

PIN	DESCRIPTION
1	Base
2	Collector
3	Emitter

Absolute maximum ratings(Ta=25℃)

SYMBOL	PARAMETER	CONDITIONS	VALUE	UNIT
V_{CBO}	Collector-base voltage	Open emitter	1500	V
V_{CEO}	Collector-emitter voltage	Open base	600	V
V_{EBO}	Emitter-base voltage	Open collector	5	V
I_C	Collector current		7	A
I_{CM}	Collector current-peak		14	A
I_B	Base current		3.5	A
P_C	Total power dissipation	T_C=25℃	50	W
T_j	Junction temperature		150	℃
T_{stg}	Storage temperature		-55~150	℃

找PDF 维库一下 pdf.dzsc.com

CHARACTERISTICS

Tj=25℃ unless otherwise specified

SYMBOL	PARAMETER	CONDITIONS	MIN	TYP.	MAX	UNIT
$V_{(BR)EBO}$	Emitter-base breakdown voltage	I_C=400mA ;I_B=0	5			V
V_{CEsat}	Collector-emitter saturation voltage	I_C=5A; I_B=1.0A			5	V
V_{BEsat}	Base-emitter saturation voltage	I_C=5A; I_B=1.0A		1.0	1.3	V
I_{CBO}	Collector cut-off current	V_{CB}=1500V; I_E=0			1	mA
I_{EBO}	Emitter cut-off current	V_{EB}=5V; I_C=0	66		200	mA
h_{FE-1}	DC current gain	I_C=1A ; V_{CE}=5V	8		28	
h_{FE-2}	DC current gain	I_C=5A ; V_{CE}=5V	5		9	
V_F	Diode forward voltage	I_F=5A		1.6	2.0	V
C_{ob}	Collector output capacitance	I_E=0 ; V_{CB}=10V,f=1MHz		115		pF
f_T	Transition frequency	I_C=0.1A ; V_{CE}=10V		2		MHz

Switching times :

t_s	Storage time	I_{CP}=5A;I_{B1}=1.0A f_H =15.75kHz		6	9	μ s
t_f	Fall time			0.3	0.6	μ s

PACKAGE OUTLINE

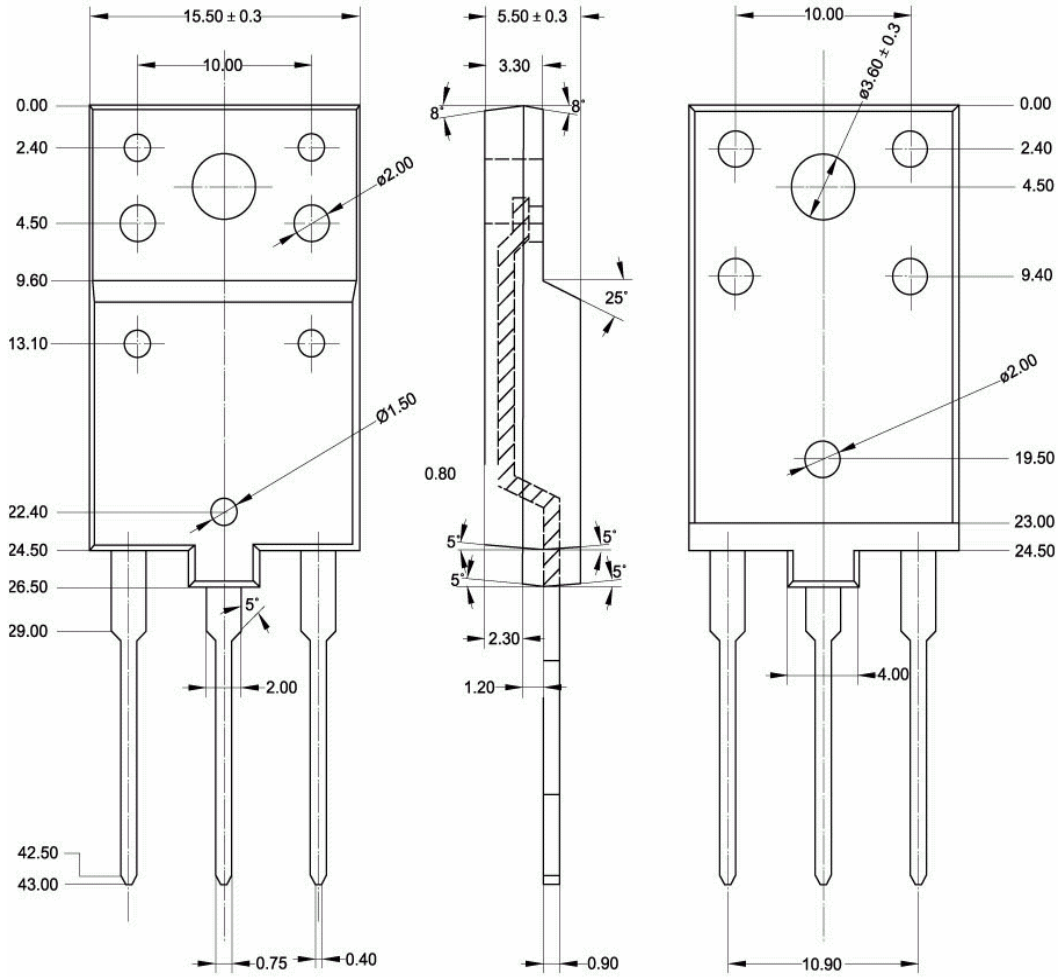

Fig.2 Outline dimensions (unindicated tolerance:±0.20 mm)

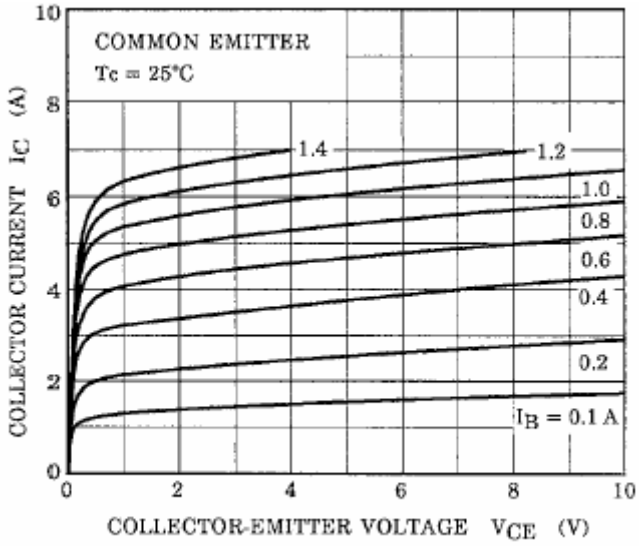

Fig.3 Static Characteristic

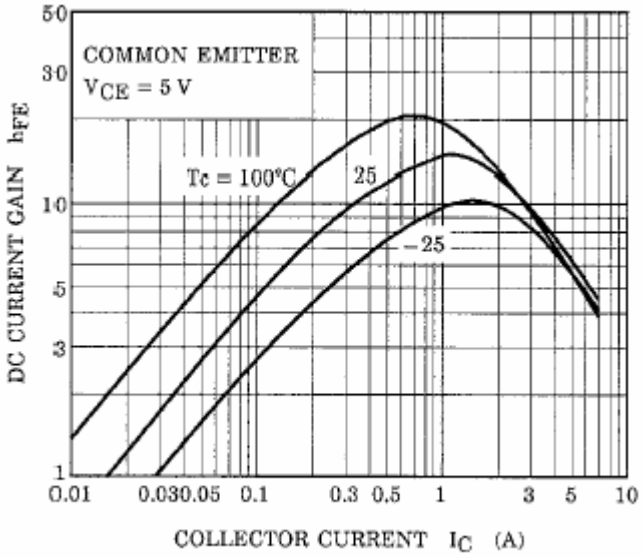

Fig.4 DC current Gain

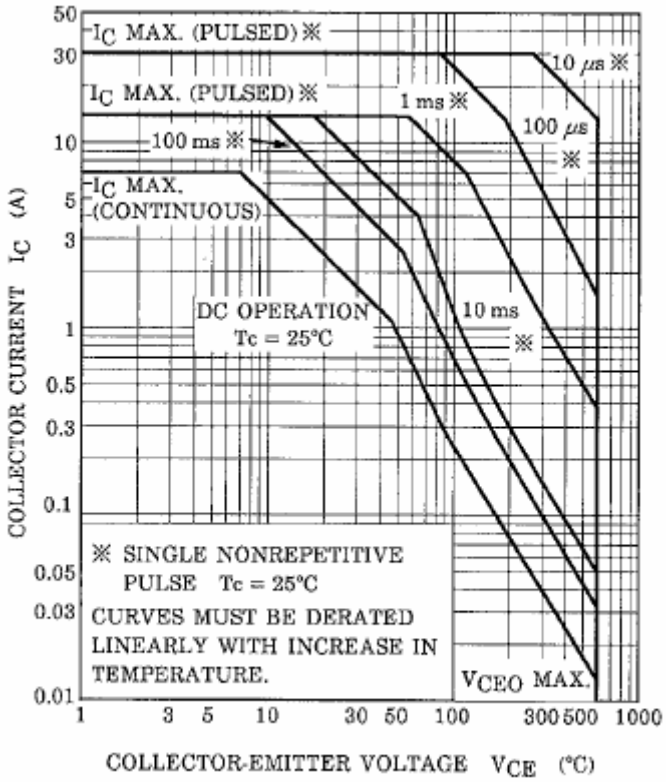

Fig.5 Safe Operating Area