查询BD744A供应商 捷多邦，专业PCB打样工厂，24小时加急出货

isc Silicon PNP Power Transistor BD744A

DESCRIPTION

- Collector-Emitter Breakdown Voltage-
  : $V_{(BR)CEO}$= -60V(Min)
- Collector Power Dissipation-
  : P_C= 90W@ I_C= 25℃
- 15A Continuous Collector Current
- Complement to Type BD743A

APPLICATIONS

- Designed for use in general purpose power amplifier and switching applications.

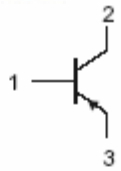

PIN 1. BASE
2. COLLECTOR
3. EMITTER
TO-220C package

ABSOLUTE MAXIMUM RATINGS(T_a=25℃)

SYMBOL	PARAMETER	VALUE	UNIT
V_{CBO}	Collector-Base Voltage	-70	V
V_{CEO}	Collector-Emitter Voltage	-60	V
V_{EBO}	Emitter-Base Voltage	-5	V
I_C	Collector Current-Continuous	-15	A
I_{CM}	Collector Current-Peak	-20	A
I_B	Base Current-Continuous	-5	A
P_C	Collector Power Dissipation @ T_a=25℃	2	W
	Collector Power Dissipation @ T_C=25℃	90	
T_J	Junction Temperature	150	℃
T_{stg}	Storage Temperature Range	-65~150	℃

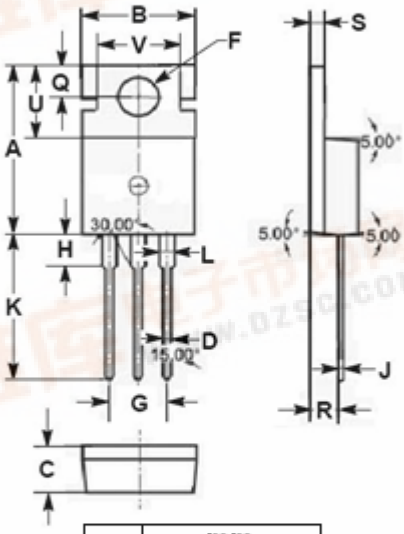

DIM	mm MIN	mm MAX
A	15.70	15.90
B	9.90	10.10
C	4.20	4.40
D	0.70	0.90
F	3.40	3.60
G	4.98	5.18
H	2.70	2.90
J	0.44	0.46
K	13.20	13.40
L	1.10	1.30
Q	2.70	2.90
R	2.50	2.70
S	1.29	1.31
U	6.45	6.65
V	8.66	8.86

THERMAL CHARACTERISTICS

SYMBOL	PARAMETER	MAX	UNIT
$R_{th\ j\text{-}c}$	Thermal Resistance, Junction to Case	1.4	℃/W
$R_{th\ j\text{-}a}$	Thermal Resistance, Junction to Ambient	62.5	℃/W

找PDF 维库一下 pdf.dzsc.com

isc Silicon PNP Power Transistor BD744A

ELECTRICAL CHARACTERISTICS

T_C=25℃ unless otherwise specified

SYMBOL	PARAMETER	CONDITIONS	MIN		MAX	UNIT
$V_{(BR)CEO}$	Collector-Emitter Breakdown Voltage	I_C= -30mA; I_B= 0	-60			V
$V_{CE(sat)-1}$	Collector-Emitter Saturation Voltage	I_C= -5A; I_B= -0.5A			-1.0	V
$V_{CE(sat)-2}$	Collector-Emitter Saturation Voltage	I_C= -15A; I_B= -5A			-3.0	V
$V_{BE(on)-1}$	Base-Emitter On Voltage	I_C= -5A ; V_{CE}= -4V			-1.0	V
$V_{BE(on)-2}$	Base-Emitter On Voltage	I_C= -15A ; V_{CE}= -4V			-3.0	V
I_{CBO}	Collector Cutoff Current	V_{CB}= -70V; I_E= 0			-0.1	mA
		V_{CB}= -70V; I_E= 0; T_C= 125℃			-5.0	
I_{CEO}	Collector Cutoff Current	V_{CE}= -30V; I_B= 0			-0.1	mA
I_{EBO}	Emitter Cutoff Current	V_{EB}= -5V; I_C= 0			-0.5	mA
h_{FE-1}	DC Current Gain	I_C= -1A ; V_{CE}= -4V	40			
h_{FE-2}	DC Current Gain	I_C= -5A ; V_{CE}= -4V	20		150	
h_{FE-3}	DC Current Gain	I_C= -15A ; V_{CE}= -4V	5			

Switching Times

t_d	Delay Time	I_C= -5A; I_{B1}= -I_{B2}= -5A; $V_{BE(off)}$= 4.2V; RL= 6Ω; t_p= 20μs,DutyCycle≤ 2%		20		ns
t_r	Rise Time			120		ns
t_s	Storage Time			600		ns
t_f	Fall time			300		ns