POWER MOS FIELD EFFECT TRANSISTORS

NTE Type Number	Description and Application	Case Style	Diag. Number	Drain to Source Breakdown Voltage (Volts) BV_{DSS}	Gate to Source Cutoff Voltage (Volts) $V_{GS}(Off)$	Gate to Source Breakdown Voltage (Volts) BV_{GSS}	Maximum Continuous Drain Current (Amps) I_D	Static Drain to on Source Resistance (Ohms) $r_{DS}(On)$	Input Capacitance (pf) C_{iss}	Forward Transconductance (mhos) gfs	Device Total Power Dissipation @T_C=25°C (Watts) P_D
2392	N–CHANNEL Enhancement Mode High Speed Switch	TO3	1f	100 Min	4 Max	±20 Max	33	0.08 Max	3000 Max	9 Min	150 Max
				$t_d(off)$ = 125ns, $t_d(on)$ = 35ns, t_f = 100ns, t_r = 100ns							
2393	N–CHANNEL Enhancement Mode High Speed Switch	TO3P	59e	500 Min	4 Max	±20 Max	9	0.7 Max	1900 Max	5 Min	150 Max
				$t_d(off)$ = 170ns, $t_d(on)$ = 40ns, t_f = 40ns, t_r = 60ns							
2394	N–CHANNEL Enhancement Mode High Speed Switch	TO3P	59e	500 Min	4 Max	±20 Max	14	0.4 Max	3000 Max	9.3 Min	180 Max
				$t_d(off)$ = 150ns, $t_d(on)$ = 35ns, t_f = 70ns, t_r = 50ns							
2395	N–CHANNEL Enhancement Mode High Speed Switch	TO220	11b	60 Min	4 Max	±20 Max	50	0.028 Max	1900 Max	15 Min	150 Max
				$t_d(off)$ = 45ns, $t_d(on)$ = 14ns, t_f = 92ns, t_r = 110ns							
2397	N–CHANNEL Enhancement Mode High Speed Switch	TO220	11b	400 Min	4 Max	±20 Max	10	0.55 Max	1400 Max	5.8 Min	125 Max
				$t_d(off)$ = 50ns, $t_d(on)$ = 14ns, t_f = 24ns, t_r = 27ns							
2398	N–CHANNEL Enhancement Mode High Speed Switch	TO220	11b	500 Min	4 Max	±20 Max	4.5	1.5 Max	610 Max	2.5 Min	74 Max
				$t_d(off)$ = 42ns, $t_d(on)$ = 8.2ns, t_f = 16ns, t_r = 16ns							

DIMENSIONAL OUTLINE DRAWINGS

Diagram 1

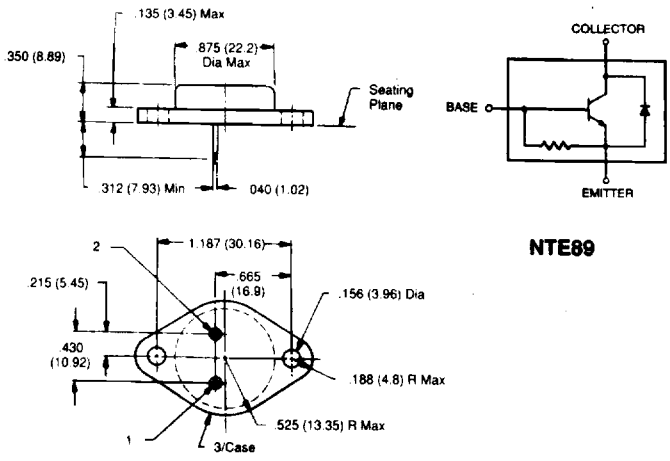

TO3

	1	2	Case
a	B	E	C
f	G	S	D

Diagram 2

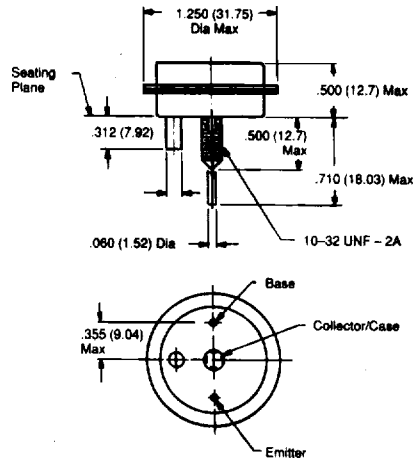

TO68

See Diagrams, beginning on Page 1–42

NTE Electronics, Inc. • Voice (800) 631–1250 (201) 748–5089 • FAX (201) 748–6224

DIMENSIONAL OUTLINE DRAWINGS

Diagram 3

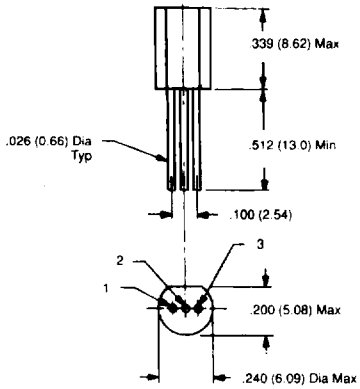

Giant TO92

	1	2	3
a	E	B	C
b	E	C	B

Diagram 4

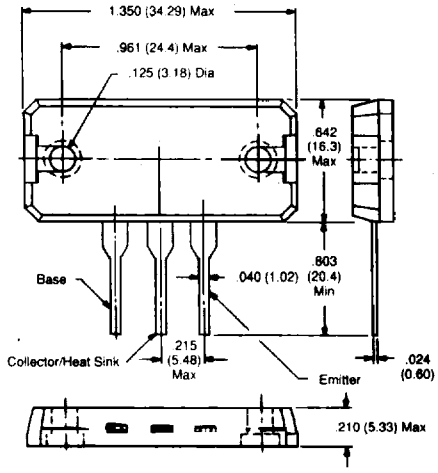

TB34

Diagram 6

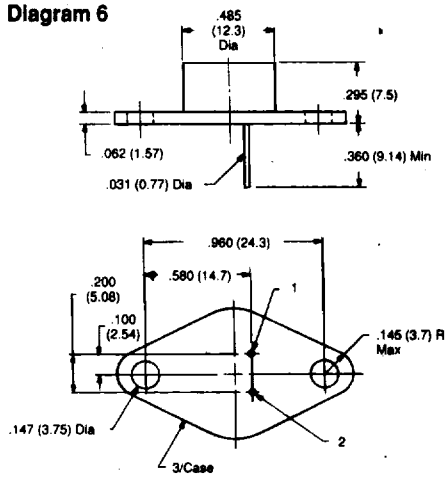

TO66

	1	2	Case
a	B	E	C

Diagram 7

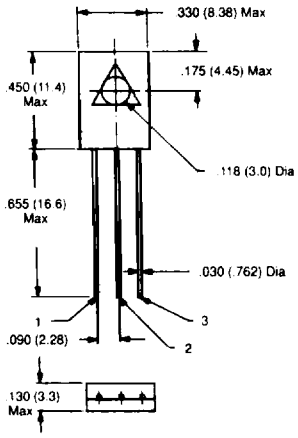

TO126

	1	2	3
a	E	C	B

Diagram 8

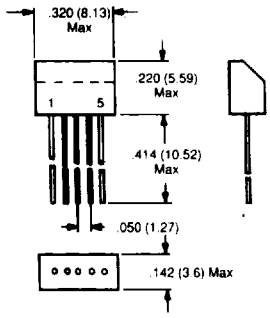

	1	2	3	4	5
a	B	C	E	C	B
b	E	C	B	C	E

Diagram 9

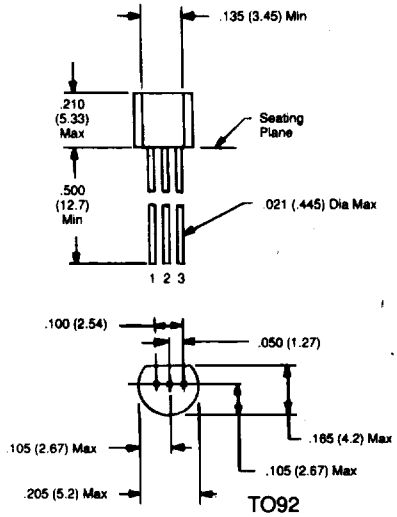

TO92

	1	2	3
a	E	B	C
b	B	E	C
c	E	C	B
d	G	S	D
e	D	S	G
f	D	G	S
o	S	D	G

Note: D & S are interchangeable on NTE312

Diagram 10

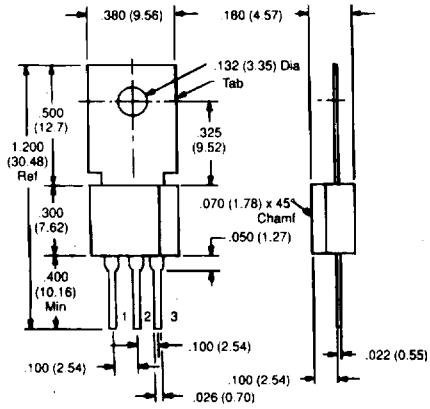

TO202

	1	2	3	Tab
a	E	B	C	C
b	B	C	E	C
c	C	B	E	C
e	B	E	C	E

Diagram 11

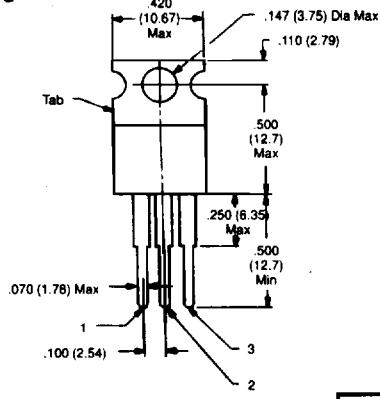

TO220

	1	2	3	Tab
a	B	C	E	C
b	G	D	S	D
l	B	C	E	Isol
m	B	E	C	E

DIMENSIONAL OUTLINE DRAWINGS

Diagram 12

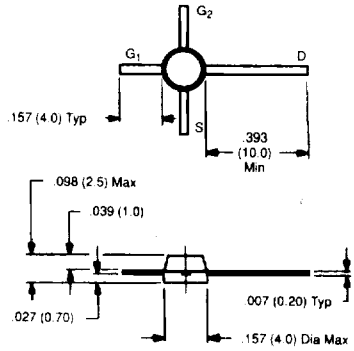

Diagram 13

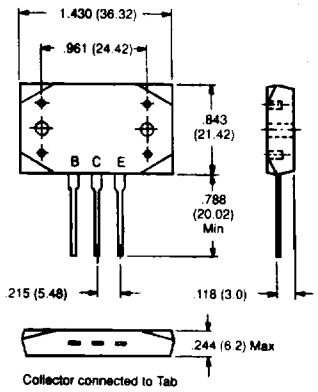

Diagram 14

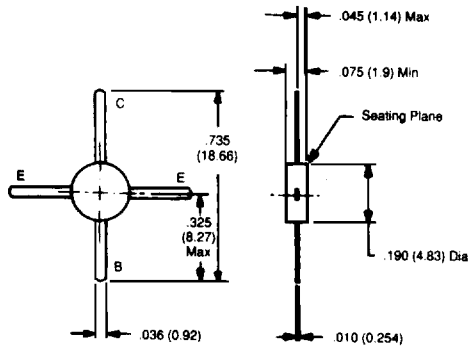

Diagram 15

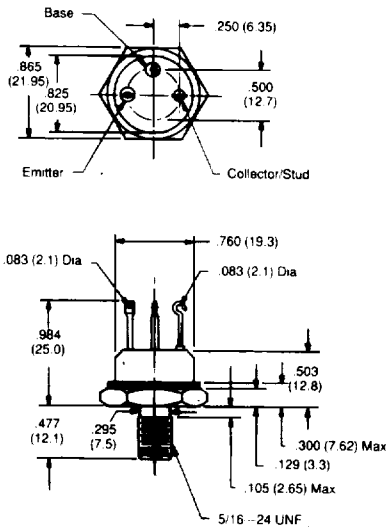

TO63

Diagram 16

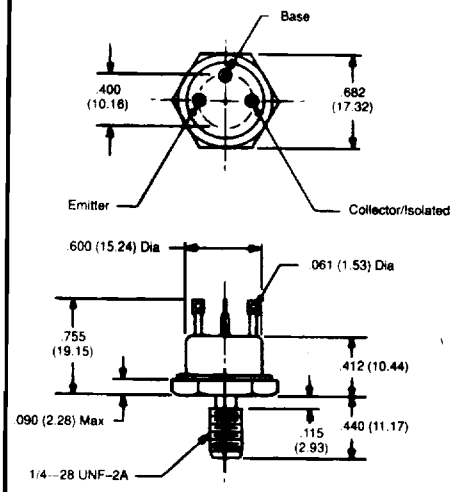

TO61

Diagram 17

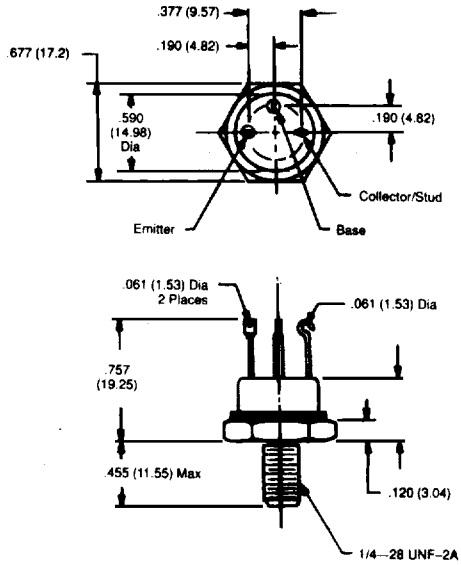

TO61

Diagram 18a

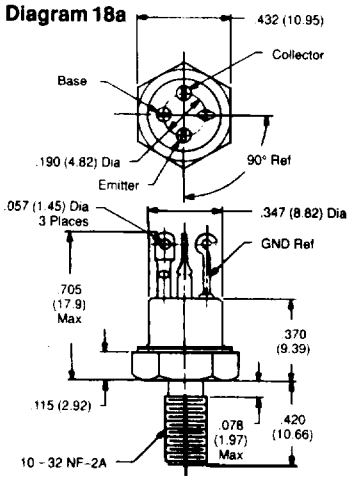

18a – Isolated Stud

TO111

Diagram 18b & c

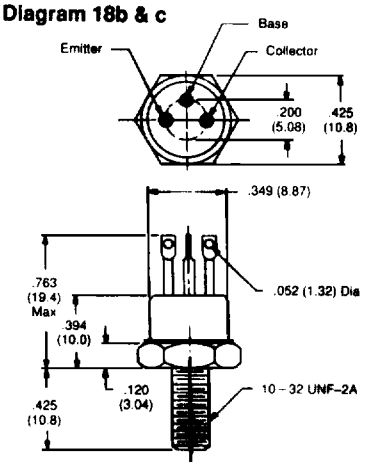

18b – Isolated Collector
18c – Collector to Stud

TO59

Diagram 19

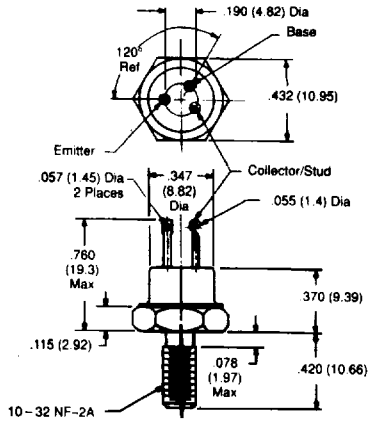

TO111

NTE Electronics, Inc. • Voice (800) 631–1250 (201) 748–5089 • FAX (201) 748–6224

DIMENSIONAL OUTLINE DRAWINGS

Diagram 20

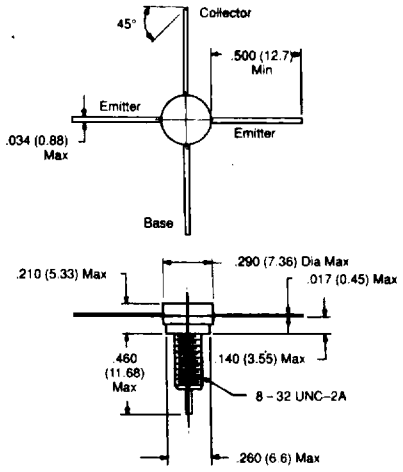

TO117

Diagram 21

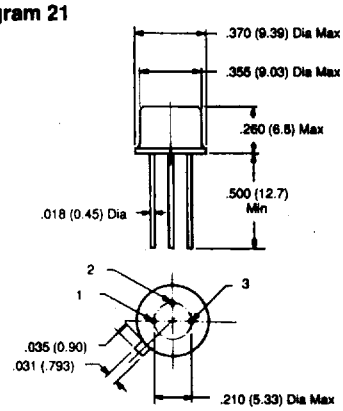

	1	2	3	Case
a	E	B	C	C
b	C	B	E	E
c	E	B	C	E

TO39

Diagram 22

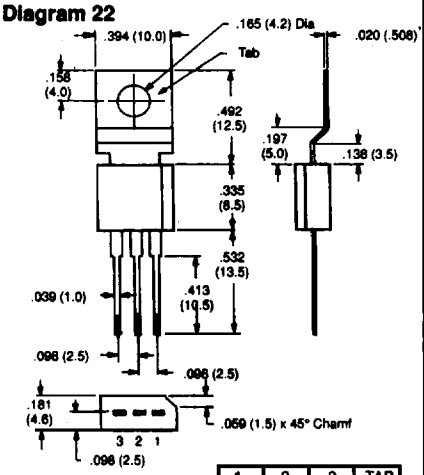

	1	2	3	TAB
a	E	C	B	C
b	C	B	E	C

TO202M

Diagram 23

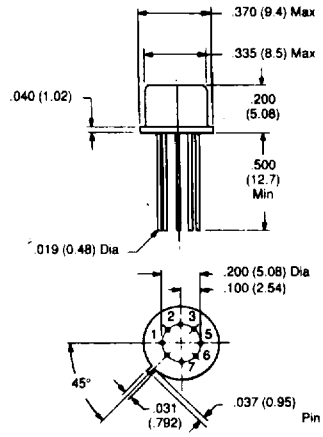

Pin4 and Pin8 Omitted

Pin 1. C1
2. B1
3. E1
5. E2
6. B2
7. C2

TO78

Diagram 25

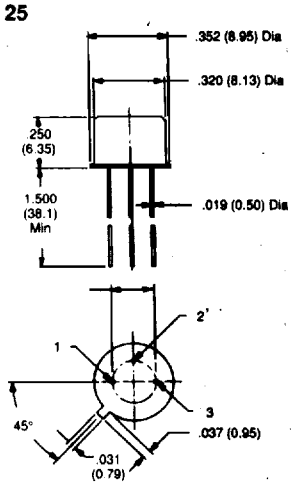

	1	2	3
a	E	B	C

TO5

Diagram 26

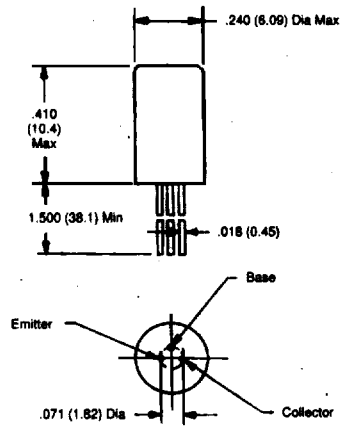

TO1

Diagram 27

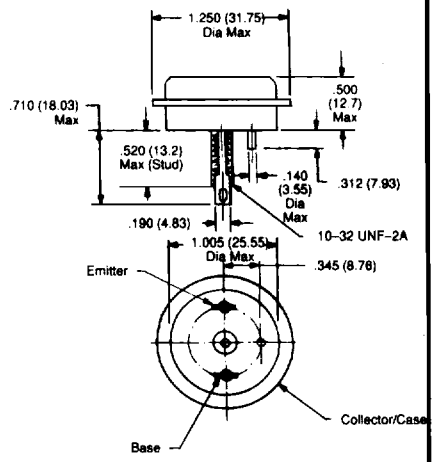

TO36

Diagram 28

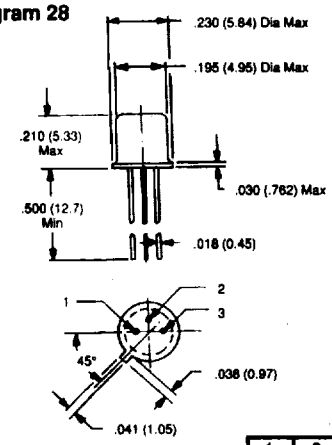

	1	2	3
a	E	B	C
b	S	G	D
c	S	D	G

TO18

Diagram 29

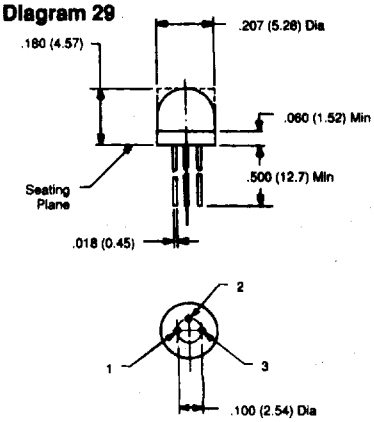

	1	2	3
a	E	B	C
b	S	D	G

TO106

DIMENSIONAL OUTLINE DRAWINGS

Diagram 30

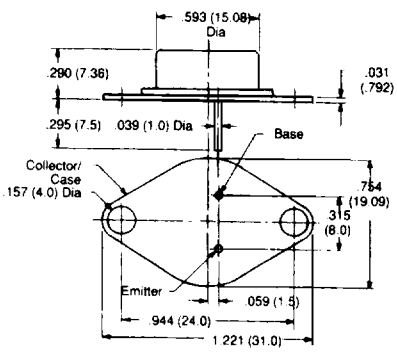

Japanese TO66

Diagram 31

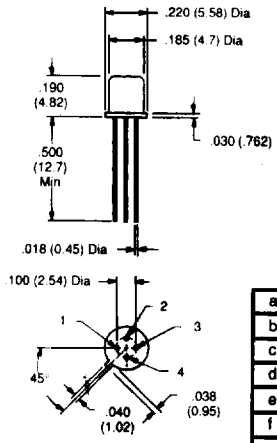

	1	2	3	4
a	E	B	C	CASE
b	B	E	C	CASE
c	D	S	G	S/CASE
d	D	G2	G1	S/CASE
e	S	D	G	CASE
f	S	G	D	CASE
g	S	G	D	S/CASE

TO72

Note: D & S interchangeable on NTE459

Diagram 33

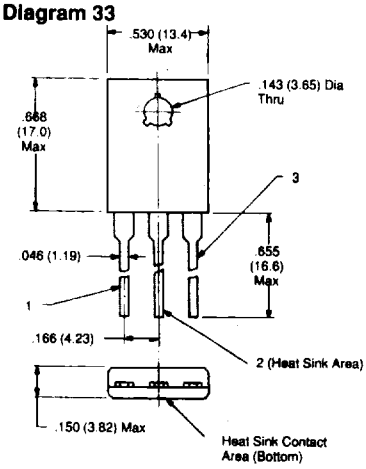

TO127

	1	2	3
a	E	C	B

Diagram 34

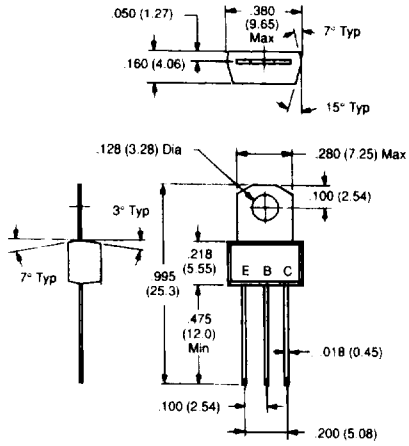

Collector Connected to Tab

TO202N

Diagram 35

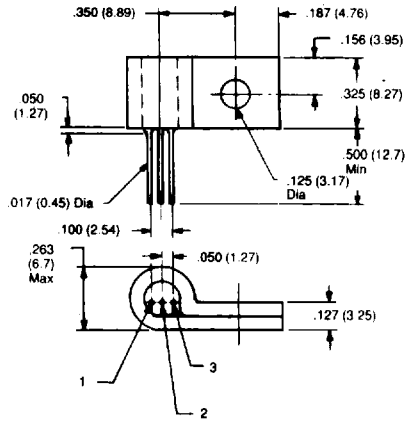

TO92HS

	1	2	3
a	C	B	E
b	B	C	E

Diagram 36

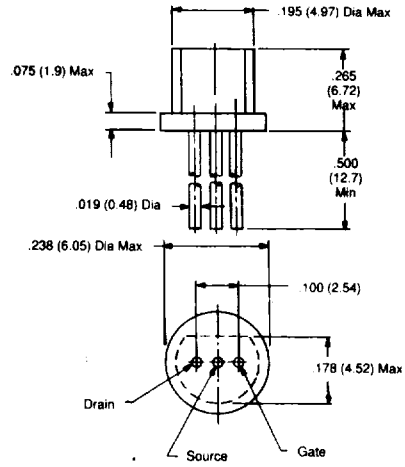

TO98M

Diagram 37

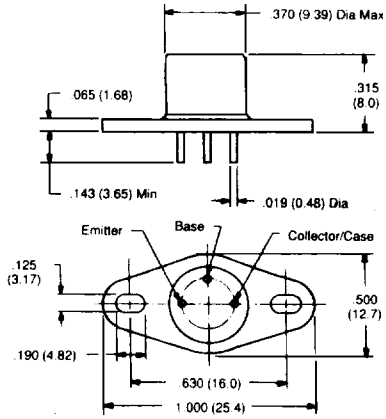

TO39F

Diagram 39

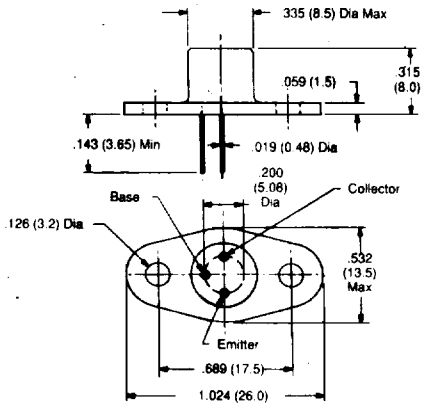

TO39HS

Diagram 40

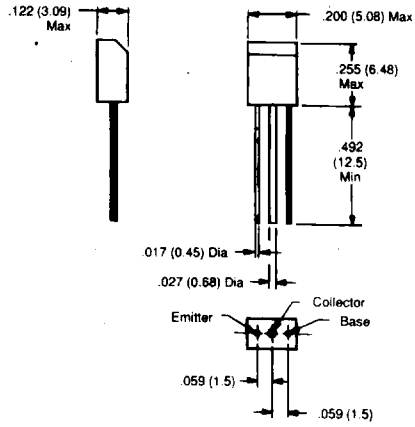

U83

NTE Electronics, Inc. • Voice (800) 631–1250 (201) 748–5089 • FAX (201) 748–6224

DIMENSIONAL OUTLINE DRAWINGS

Diagram 41

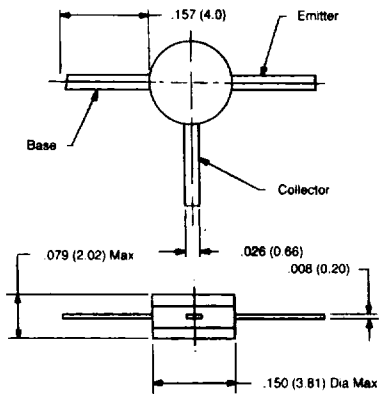

Diagram 42

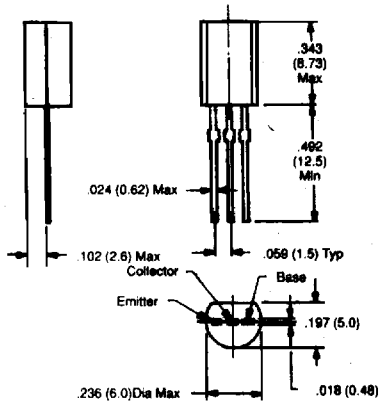

Diagram 43

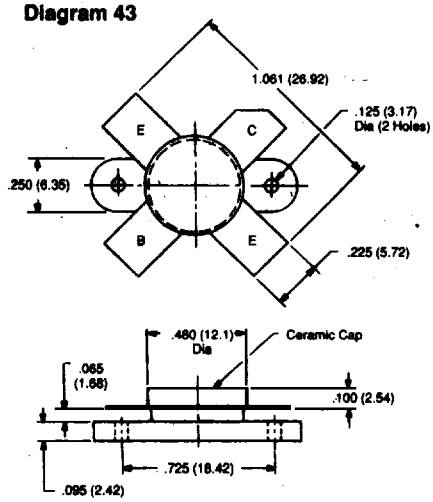

W52

Diagram 44

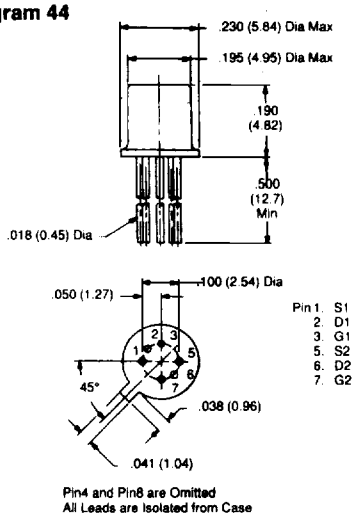

TO71

Diagram 45

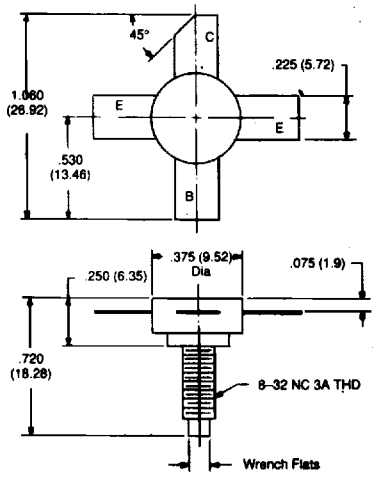

T72

Diagram 46

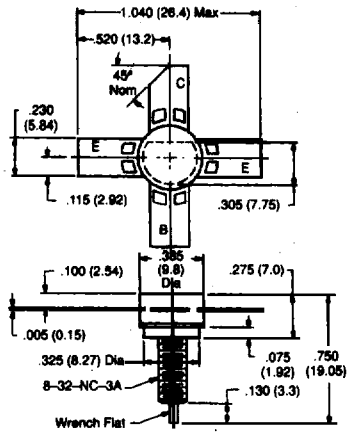

T72H

Diagram 47

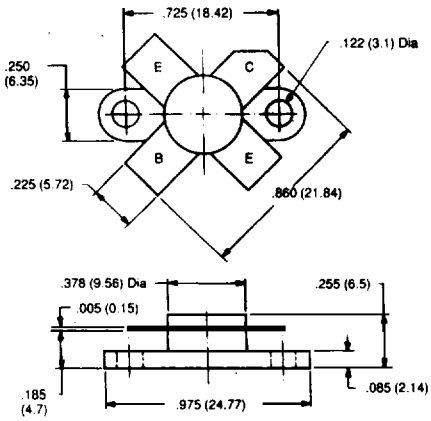

W52K

Diagram 48

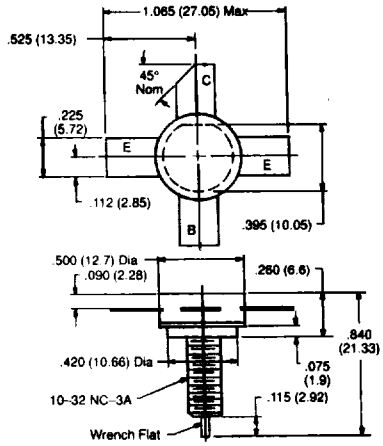

T93D

Diagram 50

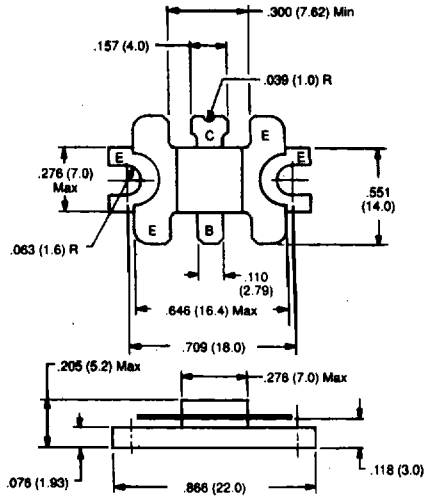

DIMENSIONAL OUTLINE DRAWINGS

Diagram 51

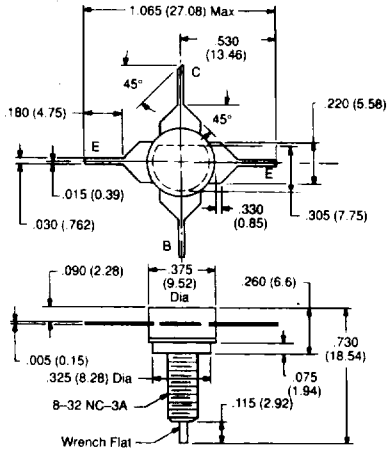

T71

Diagram 52

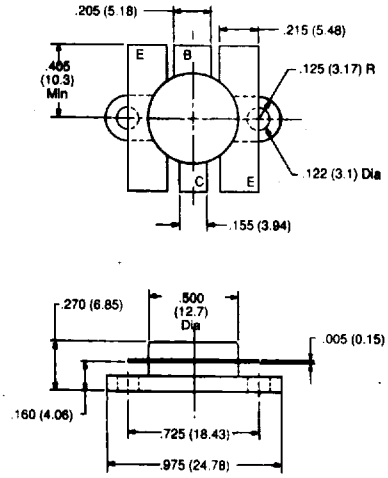

W65

Diagram 53

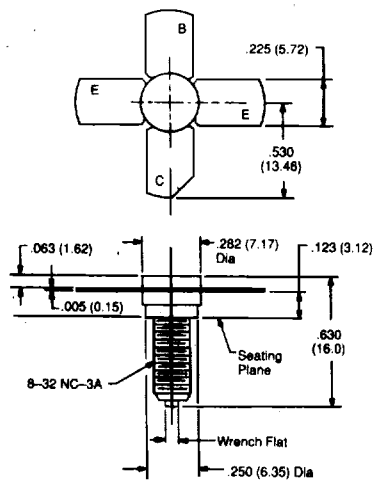

Diagram 55

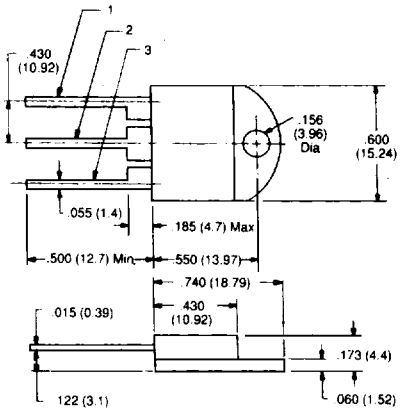

TO218

	1	2	3
a	B	C	E

Diagram 58

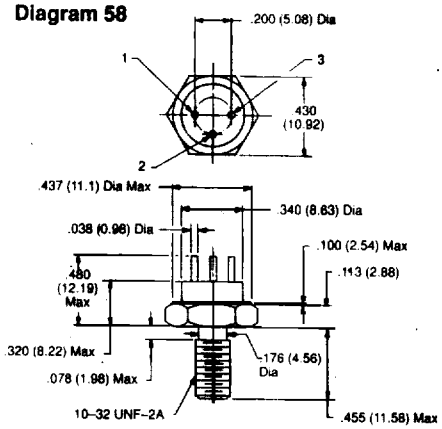

	1	2	3	STUD
a	C	B	E	E
b	C	B	E	Isol

Diagram 59

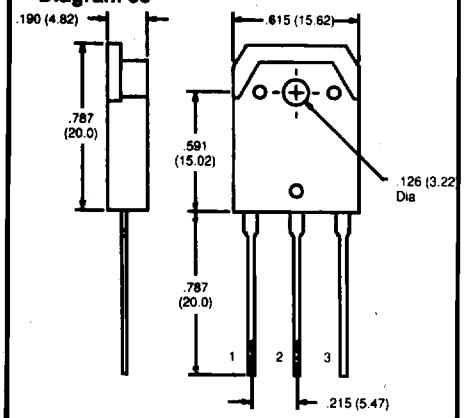

TO3P

	1	2	3	CASE
a	B	C	E	C
e	G	D	S	D

Diagram 59alt.

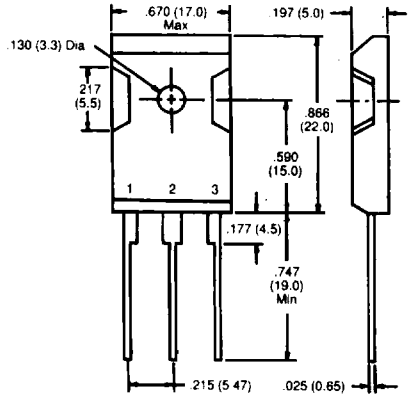

	1	2	3	CASE
a	B	C	E	C
e	G	D	S	D

Diagram 60

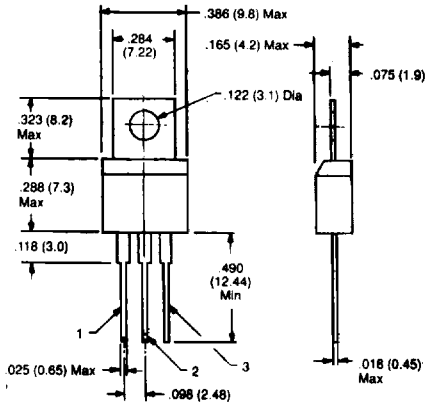

	1	2	3
a	B	C	E
b	E	B	C

Diagram 61

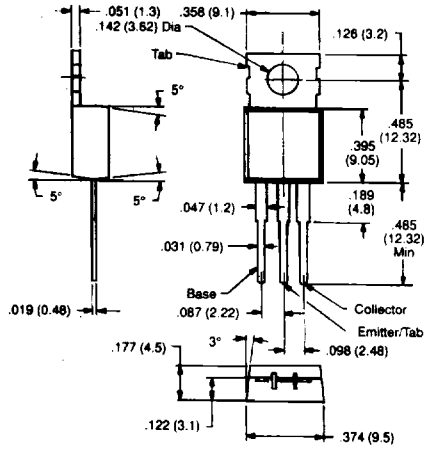

NTE Electronics, Inc. • Voice (800) 631–1250 (201) 748–5089 • FAX (201) 748–6224

DIMENSIONAL OUTLINE DRAWINGS

Diagram 63

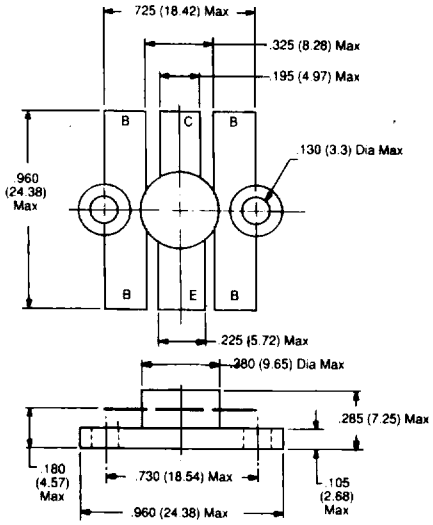

Diagram 170

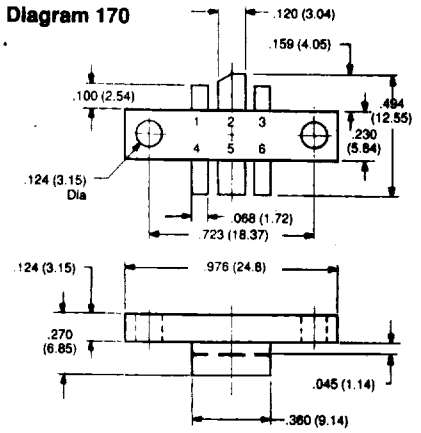

	1	2	3	4	5	6
a	E	C	E	E	B	E
b	B	C	B	B	E	B

Diagram 175

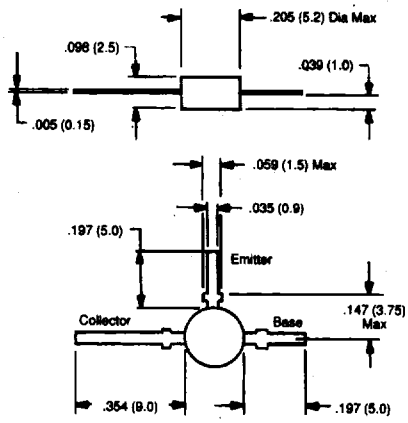

Diagram 247

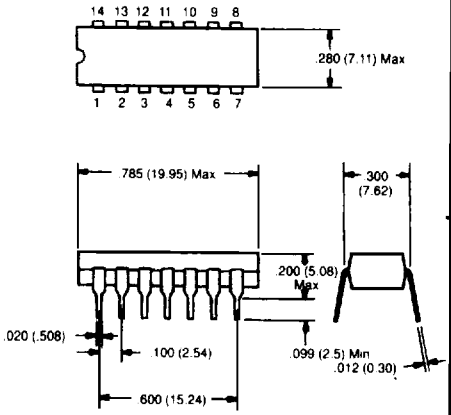

Diagram 411

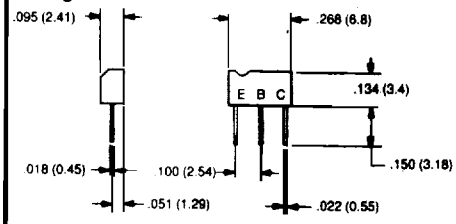

Diagram 412

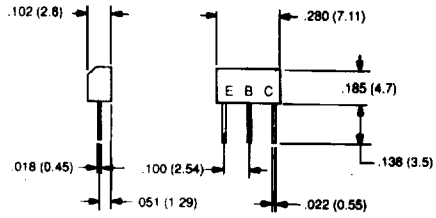

Diagram 413

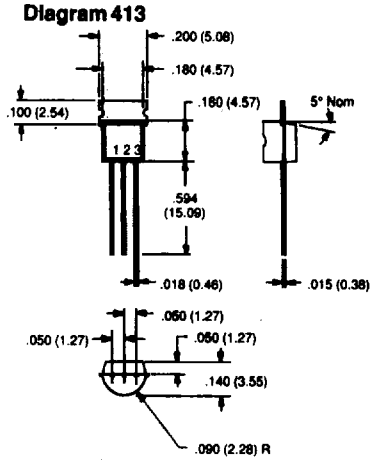

TO237

	1	2	3
a	E	B	C
b	E	C	B

Diagram 475

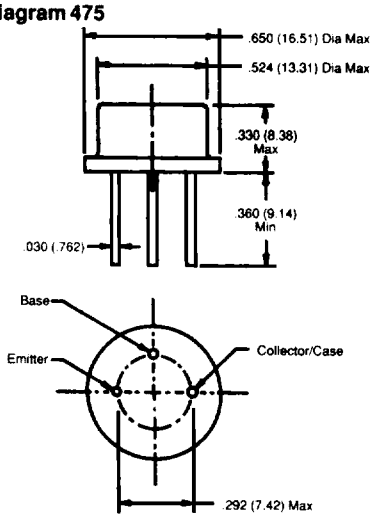

TO8

Diagram 477

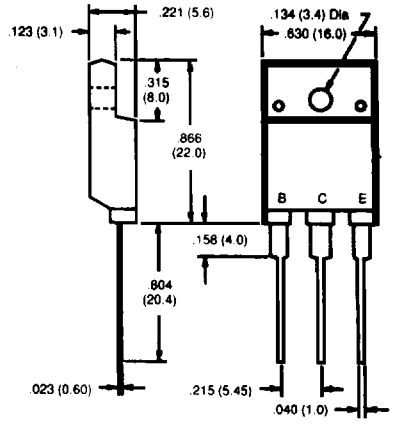

TO3PML

Diagram 508

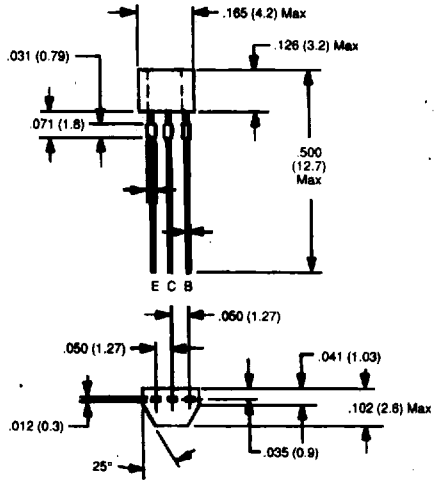

DIMENSIONAL OUTLINE DRAWINGS

Diagram 516

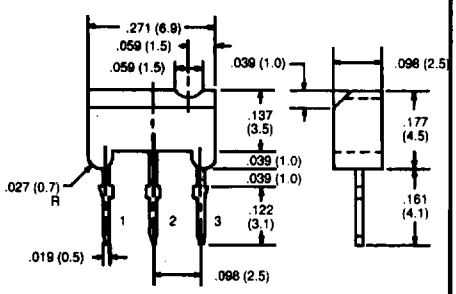

	1	2	3
a	B	C	E

Diagram 523

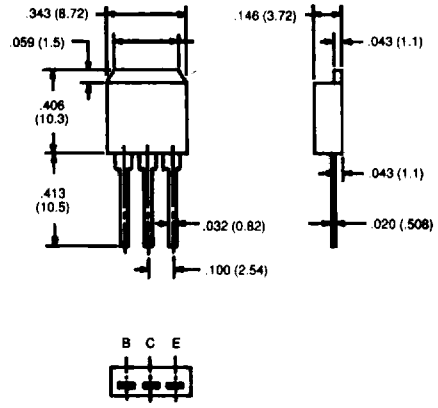

Diagram 547

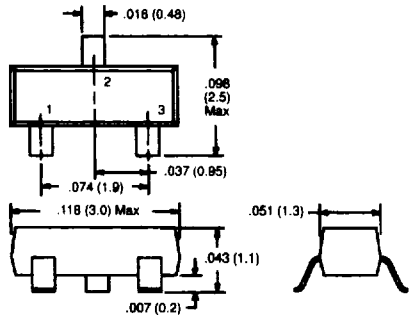

SOT–23

	1	2	3
a	B	C	E
b	B/IN	C/OUT	E/GND

Diagram 555

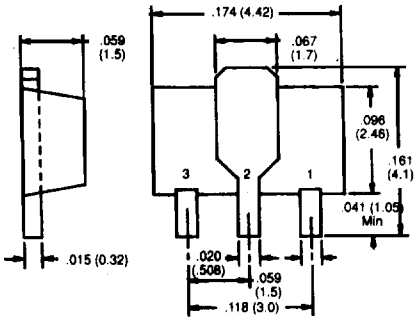

SOT–89

	1	2	3
a	B	C	E

Diagram 556

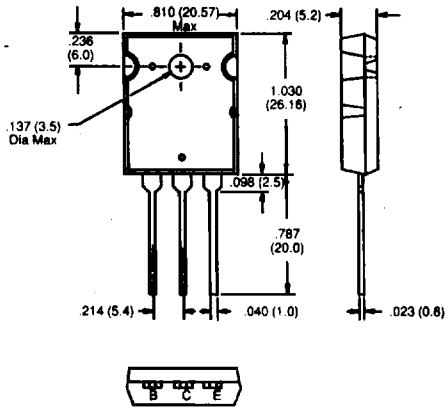

Collector Connected to Heat Sink

Diagram 560

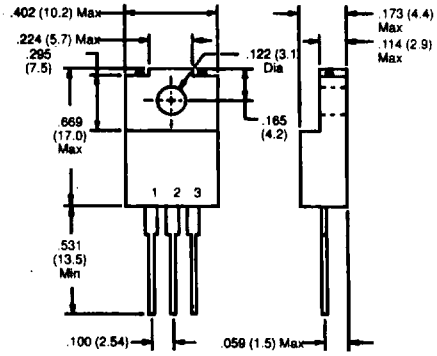

	1	2	3
a	B	C	E

Diagram 579

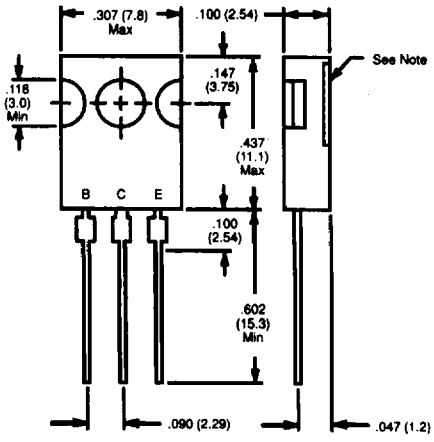

Note: Collector connected to metal part of mounting surface.

SOT–82

Diagram 582

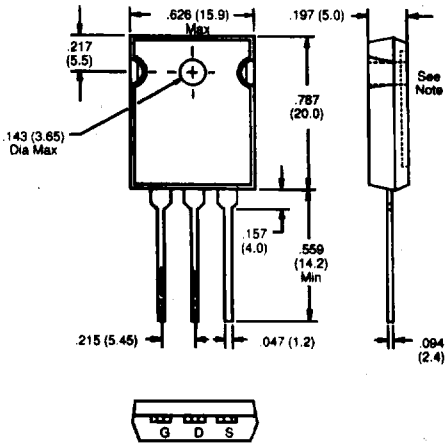

Note: Drain connected to metal part of mounting surface.

TO247

Diagram 585

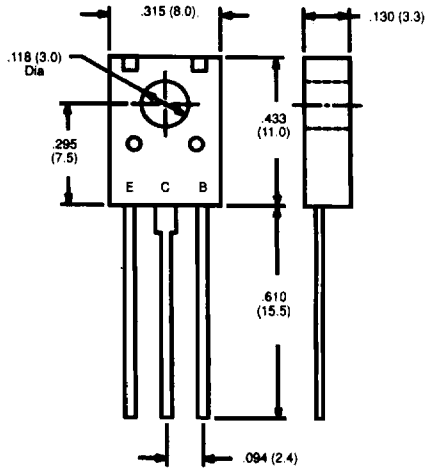

NTE Electronics, Inc. • Voice (800) 631–1250 (201) 748–5089 • FAX (201) 748–6224

DIMENSIONAL OUTLINE DRAWINGS
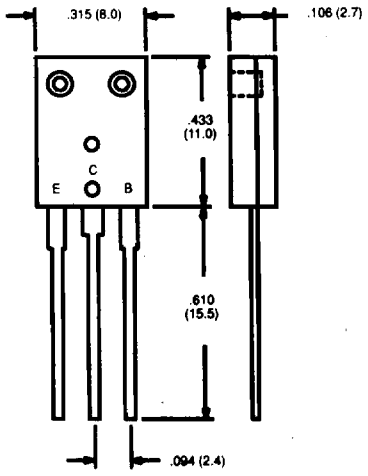
Diagram 586