# Type: CAS14D26

## ◆ Product Description

・15.0×4.8mm Max.(L×W),3.0mm Max. Height.

・Operating temperature: －40℃～＋85℃.

## ◆ Feature

・LF transponder receiver antenna.

・Ideally used in keyless smart entry system.

・RoHS Compliance.

## ◆ Dimensions (mm)

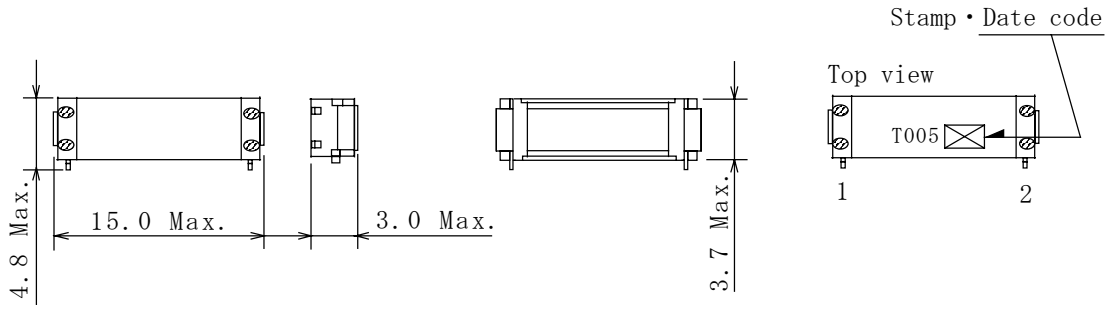


## ◆ Land Pattern (mm)

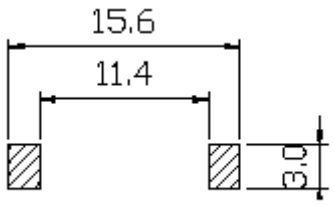


## ◆ Schematics(Bottom)

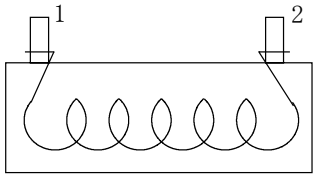


"S" is winding start.

## ◆ Specification

| | (2－1) | Measuring conditions |
|---|---|---|
| Inductance | 2.38mH±5% Within | 125kHz,1V |
| Unloaded Q | MIN. 30 | 125kHz,1V |
| D.C.R. | 27Ω(Ref.) | at 25℃ |