National Semiconductor

CD4024BM/CD4024BC 7-Stage Ripple Carry Binary Counter

General Description

The CD4024BM/CD4024BC is a 7-stage ripple-carry binary counter. Buffered outputs are externally available from stages 1 through 7. The counter is reset to its logical "0" stage by a logical "1" on the reset input. The counter is advanced one count on the negative transition of each clock pulse.

Features

- Wide supply voltage range — 3.0V to 15V
- High noise immunity — 0.45 V_{DD} (typ.)
- Low power TTL compatibility — Fan out of 2 driving 74L or 1 driving 74LS
- High speed — 12 MHz (typ.) input pulse rate $V_{DD} - V_{SS} = 10V$
- Fully static operation

Connection Diagram

Dual-In-Line Package

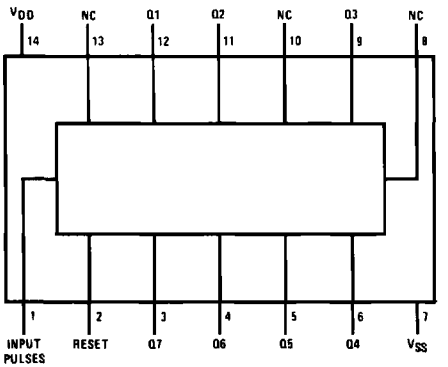

TL/F/5957-1

Top View

Order Number CD4024B*

*Please look into Section 8, Appendix D for availability of various package types.

Schematic Diagrams

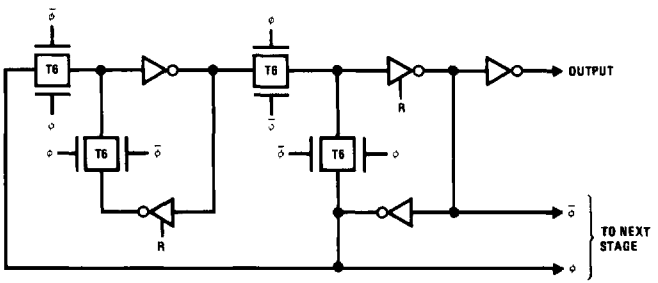

TL/F/5957-3

Input Logic

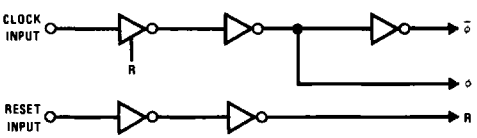

Flip-flop logic (1 of 7 identical stages).

TL/F/5957-4

Absolute Maximum Ratings (Notes 1 & 2)

If Military/Aerospace specified devices are required, contact the National Semiconductor Sales Office/ Distributors for availability and specifications.

DC Supply Voltage (V_{DD})	−0.5 to +18 V_{DC}
Input Voltage (V_{IN})	−0.5 to V_{DD} +0.5 V_{DC}
Storage Temperature Range (T_S)	−65°C to +150°C
Power Dissipation (P_D)	
Dual-In-Line	700 mW
Small Outline	500 mW
Lead Temp. (Soldering, 10 sec.) (T_L)	260°C

Recommended Operating Conditions (Note 2)

DC Supply Voltage (V_{DD})	+3 to +15 V_{DC}
Input Voltage (V_{IN})	0 to V_{DD} V_{DC}
Operating Temperature Range (T_A)	
CD4024BM	−55°C to +125°C
CD4024BC	−40°C to +85°C

DC Electrical Characteristics CD4024BM (Note 2)

Symbol	Parameter	Conditions	−55°C		+25°C			+125°C		Units
			Min	Max	Min	Typ	Max	Min	Max	
I_{DD}	Quiescent Device Current	V_{DD} = 5V		5		0.3	5		150	μA
		V_{DD} = 10V		10		0.5	10		300	μA
		V_{DD} = 15V		20		0.7	20		600	μA
V_{OL}	Low Level Output Voltage	$\|I_O\|$ < 1 μA								
		V_{DD} = 5V		0.05		0	0.05		0.05	V
		V_{DD} = 10V		0.05		0	0.05		0.05	V
		V_{DD} = 15V		0.05		0	0.05		0.05	V
V_{OH}	High Level Output Voltage	$\|I_O\|$ < 1 μA								
		V_{DD} = 5V	4.95		4.95	5		4.95		V
		V_{DD} = 10V	9.95		9.95	10		9.95		V
		V_{DD} = 15V	14.95		14.95	15		14.95		V
V_{IL}	Low Level Input Voltage	$\|I_O\|$ < 1 μA								
		V_{DD} = 5V, V_O = 0.5V or 4.5V		1.5		2	1.5		1.5	V
		V_{DD} = 10V, V_O = 1.0V or 9.0V		3.0		4	3.0		3.0	V
		V_{DD} = 15V, V_O = 1.5V or 13.5V		4.0		6	4.0		4.0	V
V_{IH}	High Level Input Voltage	$\|I_O\|$ < 1 μA								
		V_{DD} = 5V, V_O = 0.5V or 4.5V	3.5		3.5	3		3.5		V
		V_{DD} = 10V, V_O = 1.0V or 9.0V	7.0		7.0	6		7.0		V
		V_{DD} = 15V, V_O = 1.5V or 13.5V	11.0		11.0	9		11.0		V
I_{OL}	Low Level Output Current (Note 3)	V_{DD} = 5V, V_O = 0.4V	0.64		0.51	0.88		0.36		mA
		V_{DD} = 10V, V_O = 0.5V	1.6		1.3	2.25		0.9		mA
		V_{DD} = 15V, V_O = 1.5V	4.2		3.4	8.8		2.4		mA
I_{OH}	High Level Output Current (Note 3)	V_{DD} = 5V, V_O = 4.6V	−0.64		−0.51	−0.88		−0.36		mA
		V_{DD} = 10V, V_O = 9.5V	−1.6		−1.3	−2.25		−0.9		mA
		V_{DD} = 15V, V_O = 13.5V	−4.2		−3.4	−8.8		−2.4		mA
I_{IN}	Input Current	V_{DD} = 15V, V_{IN} = 0V		−0.10		-10^{-5}	−0.10		−1.0	μA
		V_{DD} = 15V, V_{IN} = 15V		0.10		10^{-5}	0.10		1.0	μA

DC Electrical Characteristics CD4024BC (Note 2)

Symbol	Parameter	Conditions	−40°C		+25°C			+85°C		Units
			Min	Max	Min	Typ	Max	Min	Max	
I_{DD}	Quiescent Device Current	V_{DD} = 5V		20		0.3	20		150	μA
		V_{DD} = 10V		40		0.5	40		300	μA
		V_{DD} = 15V		60		0.7	80		600	μA
V_{OL}	Low Level Output Voltage	$\|I_O\|$ < 1 μA								
		V_{DD} = 5V		0.05		0	0.05		0.05	V
		V_{DD} = 10V		0.05		0	0.05		0.05	V
		V_{DD} = 15V		0.05		0	0.05		0.05	V
V_{OH}	High Level Output Voltage	$\|I_O\|$ < 1 μA								
		V_{DD} = 5V	4.95		4.95	5		4.95		V
		V_{DD} = 10V	9.95		9.95	10		9.95		V
		V_{DD} = 15V	14.95		14.95	15		14.95		V

DC Electrical Characteristics CD4024BC (Note 2) (Continued)

Symbol	Parameter	Conditions	−40°C		+25°C			+85°C		Units
			Min	Max	Min	Typ	Max	Min	Max	
V_{IL}	Low Level Input Voltage	$\|I_O\| < 1\ \mu A$								
		$V_{DD} = 5V, V_O = 0.5V$ or $4.5V$		1.5		2	1.5		1.5	V
		$V_{DD} = 10V, V_O = 1.0V$ or $9.0V$		3.0		4	3.0		3.0	V
		$V_{DD} = 15V, V_O = 1.5V$ or $13.5V$		4.0		6	4.0		4.0	V
V_{IH}	High Level Input Voltage	$\|I_O\| < 1\ \mu A$								
		$V_{DD} = 5V, V_O = 0.5V$ or $4.5V$	3.5		3.5	3		3.5		V
		$V_{DD} = 10V, V_O = 1.0V$ or $9.0V$	7.0		7.0	6		7.0		V
		$V_{DD} = 15V, V_O = 1.5V$ or $13.5V$	11.0		11.0	9		11.0		V
I_{OL}	Low Level Output Current (Note 3)	$V_{DD} = 5V, V_O = 0.4V$	0.52		0.44	0.88		0.36		mA
		$V_{DD} = 10V, V_O = 0.5V$	1.3		1.1	2.25		0.9		mA
		$V_{DD} = 15V, V_O = 1.5V$	3.6		3.0	8.8		2.4		mA
I_{OH}	High Level Output Current (Note 3)	$V_{DD} = 5V, V_O = 4.6V$	−0.52		−0.44	−0.88		−0.36		mA
		$V_{DD} = 10V, V_O = 9.5V$	−1.3		−1.1	−2.25		−0.9		mA
		$V_{DD} = 15V, V_O = 13.5V$	−3.6		−3.0	−8.8		−2.4		mA
I_{IN}	Input Current	$V_{DD} = 15V, V_{IN} = 0V$		−0.30		-10^{-5}	−0.30		−1.0	μA
		$V_{DD} = 15V, V_{IN} = 15V$		0.30		10^{-5}	0.30		1.0	μA

AC Electrical Characteristics*

$T_A = 25°C$, $C_L = 50$ pF, $R_L = 200$ k, t_r and $t_f = 20$ ns unless otherwise specified

Symbol	Parameter	Conditions	Min	Typ	Max	Units
t_{PHL}, t_{PLH}	Propagation Delay Time to Q1 Output	$V_{DD} = 5V$		185	350	ns
		$V_{DD} = 10V$		85	125	ns
		$V_{DD} = 15V$		70	100	ns
t_{THL}, t_{TLH}	Transition Time	$V_{DD} = 5V$		100	200	ns
		$V_{DD} = 10V$		50	100	ns
		$V_{DD} = 15V$		40	80	ns
t_{WL}, t_{WH}	Minimum Input Pulse Width	$V_{DD} = 5V$		75	200	ns
		$V_{DD} = 10V$		40	110	ns
		$V_{DD} = 15V$		35	90	ns
t_{RCL}, t_{FCL}	Input Rise and Fall Time	$V_{DD} = 5V$			15	μs
		$V_{DD} = 10V$			10	μs
		$V_{DD} = 15V$			8	μs
f_{CL}	Maximum Input Pulse Frequency	$V_{DD} = 5V$	1.5	5		MHz
		$V_{DD} = 10V$	4	12		MHz
		$V_{DD} = 15V$	5	15		MHz
t_{PHL}	Reset Propagation Delay Time	$V_{DD} = 5V$		185	350	ns
		$V_{DD} = 10V$		85	125	ns
		$V_{DD} = 15V$		70	100	ns
t_{WH}	Reset Minimum Pulse Width	$V_{DD} = 5V$		185	350	ns
		$V_{DD} = 10V$		85	125	ns
		$V_{DD} = 15V$		70	100	ns
C_{IN}	Input Capacitance (Note 4)	Any Input		5	7.5	pF

*AC Parameters are guaranteed by DC correlated testing.

Note 1: "Absolute Maximum Ratings" are those values beyond which the safety of the device cannot be guaranteed, they are not meant to imply that the devices should be operated at these limits. The table of "Recommended Operating Conditions" and "Electrical Characteristics" provides conditions for actual device operation.

Note 2: $V_{SS} = 0V$ unless otherwise specified.

Note 3: I_{OH} and I_{OL} are tested one output at a time.

Note 4: Capacitance is guaranteed by periodic tesing.

Logic Diagram

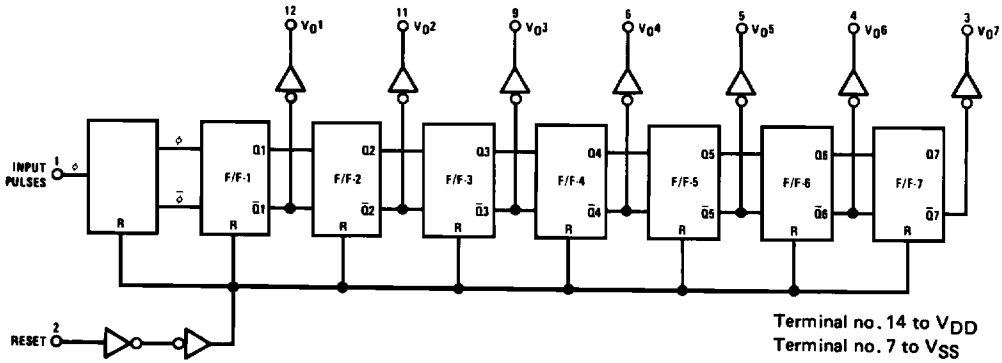

Terminal no. 14 to V_{DD}
Terminal no. 7 to V_{SS}

TL/F/5957-2