CY62148DV30

4-Mb (512K x 8) MoBL® Static RAM

Features

- **Very high speed: 55 ns**
  - **Wide voltage range: 2.20V – 3.60V**
- **Pin-compatible with CY62148CV25, CY62148CV30 and CY62148CV33**
- **Ultra low active power**
  - **Typical active current: 1.5 mA @ f = 1 MHz**
  - **Typical active current: 8 mA @ f = f_{max}(55-ns speed)**
- **Ultra low standby power**
- **Easy memory expansion with $\overline{CE}$, and $\overline{OE}$ features**
- **Automatic power-down when deselected**
- **CMOS for optimum speed/power**
- **Packages offered: 36-ball BGA, 32-pin TSOPII and 32-pin SOIC**

Functional Description[1]

The CY62148DV30 is a high-performance CMOS static RAMs organized as 512K words by 8 bits. This device features advanced circuit design to provide ultra-low active current. This is ideal for providing More Battery Life™ (MoBL®) in portable applications such as cellular telephones. The device also has an automatic power-down feature that significantly reduces power consumption. The device can be put into standby mode reducing power consumption when deselected ($\overline{CE}$ HIGH).

Writing to the device is accomplished by taking Chip Enable ($\overline{CE}$) and Write Enable ($\overline{WE}$) inputs LOW. Data on the eight I/O pins (I/O_0 through I/O_7) is then written into the location specified on the address pins (A_0 through A_{18}).

Reading from the device is accomplished by taking Chip Enable ($\overline{CE}$) and Output Enable ($\overline{OE}$) LOW while forcing Write Enable ($\overline{WE}$) HIGH. Under these conditions, the contents of the memory location specified by the address pins will appear on the I/O pins.

The eight input/output pins (I/O_0 through I/O_7) are placed in a high-impedance state when the device is deselected ($\overline{CE}$ HIGH), the outputs are disabled ($\overline{OE}$ HIGH), or during a write operation ($\overline{CE}$ LOW and $\overline{WE}$ LOW).

Logic Block Diagram

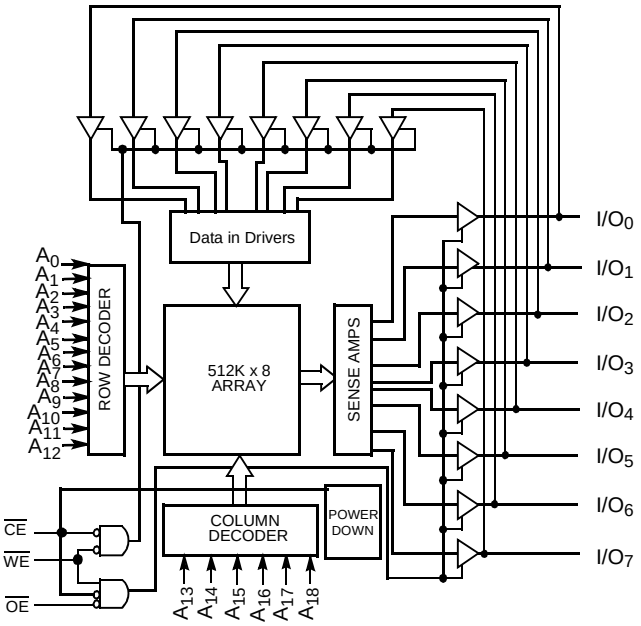

Note:

1. For best practice recommendations, please refer to the Cypress application note "System Design Guidelines" on http://www.cypress.com.

Pin Configuration[2,3]

FBGA
Top View

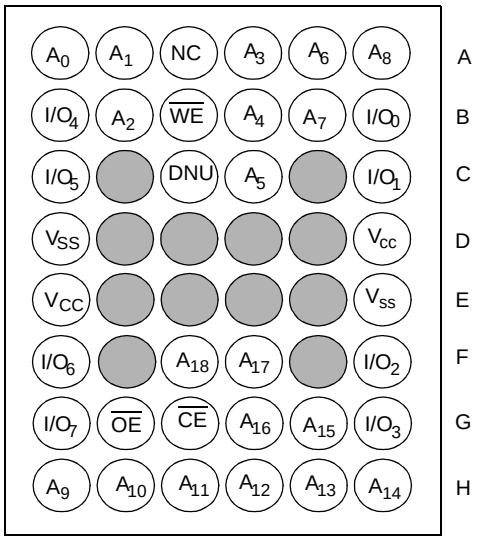

32 TSOPII
Top View

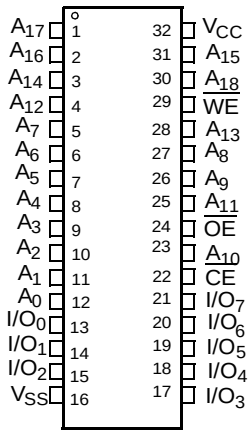

32 SOIC
Top View

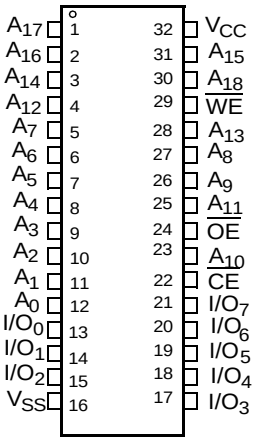

Notes:
2. NC pins are not connected on the die.
3. DNU pins have to be left floating or tied to Vss to ensure proper application.

Maximum Ratings

(Above which the useful life may be impaired. For user guidelines, not tested.)

Storage Temperature ..... –65°C to +150°C

Ambient Temperature with Power Applied ..... 55°C to +125°C

Supply Voltage to Ground Potential ..... –0.3V to $V_{CC(MAX)}$ + 0.3V

DC Voltage Applied to Outputs in High-Z State[4,5] ..... –0.3V to $V_{CC(MAX)}$ + 0.3V

DC Input Voltage[4,5] ..... –0.3V to $V_{CC(MAX)}$ + 0.3V

Output Current into Outputs (LOW) ..... 20 mA

Static Discharge Voltage ..... > 2001V (per MIL-STD-883, Method 3015)

Latch-up Current ..... > 200 mA

Operating Range

Product	Range	Ambient Temperature	V_{CC}[6]
CY62148DV30L	Industrial	–40°C to +85°C	2.2V to 3.6V
CY62148DV30LL			

Product Portfolio

Product	V_{CC} Range (V)			Speed (ns)	Power Dissipation					
					Operating I_{CC} (mA)				Standby I_{SB2} (uA)	
					f = 1 MHz		f = f_{max}			
	Min.	Typ.[7]	Max.		Typ.[7]	Max.	Typ.[7]	Max.	Typ.[7]	Max.
CY62148DV30L	2.2	3.0	3.6	55	1.5	3	8	15	2	12
CY62148DV30LL	2.2	3.0	3.6	55		3		10		8
CY62148DV30L	2.2	3.0	3.6	70	1.5	3	8	15	2	12
CY62148DV30LL	2.2	3.0	3.6	70		3		10		8

Electrical Characteristics Over the Operating Range

Parameter	Description	Test Conditions			CY62148DV30-55			CY62148DV30-70			Unit
					Min.	Typ.[7]	Max.	Min.	Typ.[7]	Max.	
V_{OH}	Output HIGH Voltage	I_{OH} = –0.1 mA	V_{CC} = 2.20V		2.0			2.0			V
		I_{OH} = –1.0 mA	V_{CC} = 2.70V		2.4			2.4			V
V_{OL}	Output LOW Voltage	I_{OL} = 0.1 mA	V_{CC} = 2.20V				0.4			0.4	V
		I_{OL} = 2.1 mA	V_{CC} = 2.70V				0.4			0.4	V
V_{IH}	Input HIGH Voltage	V_{CC} = 2.2V to 2.7V			1.8		V_{CC} + 0.3V	1.8		V_{CC} + 0.3V	V
		V_{CC}= 2.7V to 3.6V			2.2		V_{CC} + 0.3V	2.2		V_{CC} + 0.3V	V
V_{IL}	Input LOW Voltage	V_{CC} = 2.2V to 2.7V			–0.3		0.6	–0.3		0.6	V
		V_{CC}= 2.7V to 3.6V			–0.3		0.8	–0.3		0.8	V
I_{IX}	Input Leakage Current	GND ≤ V_I ≤ V_{CC}			–1		+1	–1		+1	µA
I_{OZ}	Output Leakage Current	GND ≤ V_O ≤ V_{CC}, Output Disabled			–1		+1	–1		+1	µA
I_{CC}	V_{CC} Operating Supply Current	f = f_{MAX} = 1/t_{RC}	V_{CC} = V_{CCmax} I_{OUT} = 0 mA CMOS levels	L		8	15		8	15	mA
				LL			10			10	mA
		f = 1 MHz		L		1.5	3		1.5	3	mA
				LL							mA
I_{SB1}	Automatic CE Power-down Current — CMOS Inputs	$\overline{CE}$ ≥ V_{CC}–0.2V, V_{IN}≥V_{CC}–0.2V, V_{IN}≤0.2V) f = f_{MAX} (Address and Data Only), f = 0 (OE, and WE), V_{CC}=3.60V		L		2	12		2	12	µA
				LL			8			8	
I_{SB2}	Automatic CE Power-down Current — CMOS Inputs	$\overline{CE}$ ≥ V_{CC} – 0.2V, V_{IN} ≥ V_{CC} – 0.2V or V_{IN} ≤ 0.2V, f = 0, V_{CC} = 3.60V		L		2	12		2	12	µA
				LL			8			8	

Notes:

4. $V_{IL(min.)}$ = –2.0V for pulse durations less than 20 ns.
5. $V_{IH(max)}$ = V_{CC}+0.75V for pulse durations less than 20 ns.
6. Full device AC operation assumes a 100 µs ramp time from 0 to V_{cc}(min) and 200 µs wait time after V_{cc} stabilization.
7. Typical values are included for reference only and are not guaranteed or tested. Typical values are measured at V_{CC} = $V_{CC(typ.)}$, T_A = 25°C.

Capacitance for all packages[8]

Parameter	Description	Test Conditions	Max.	Unit
C_{IN}	Input Capacitance	$T_A = 25°C$, f = 1 MHz, $V_{CC} = V_{CC(typ.)}$	10	pF
C_{OUT}	Output Capacitance		10	pF

Thermal Resistance

Parameter	Description	Test Conditions	BGA	TSOP II	SOIC	STSOP	Unit
Θ_{JA}	Thermal Resistance (Junction to Ambient)	Still Air, soldered on a 3 x 4.5 inch, four-layer printed circuit board	72	75.13	55	105	°C/W
Θ_{JC}	Thermal Resistance (Junction to Case)		8.86	8.95	22	13	°C/W

AC Test Loads and Waveforms

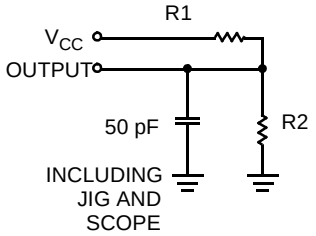

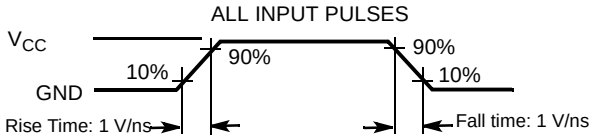

Equivalent to: THÉVENIN EQUIVALENT

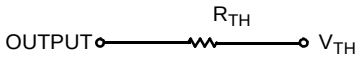

Parameters	2.50V	3.0V	Unit
R1	16667	1103	Ω
R2	15385	1554	Ω
R_{TH}	8000	645	Ω
V_{TH}	1.20	1.75	V

Data Retention Characteristics (Over the Operating Range)

Parameter	Description	Conditions		Min.	Typ.[7]	Max.	Unit
V_{DR}	V_{CC} for Data Retention			1.5			V
I_{CCDR}	Data Retention Current	$V_{CC} = 1.5V$, $\overline{CE} \geq V_{CC} - 0.2V$, $V_{IN} \geq V_{CC} - 0.2V$ or $V_{IN} \leq 0.2V$	L			9	µA
			LL			6	µA
t_{CDR}[8]	Chip Deselect to Data Retention Time			0			ns
t_R[9]	Operation Recovery Time			t_{RC}			ns

Data Retention Waveform

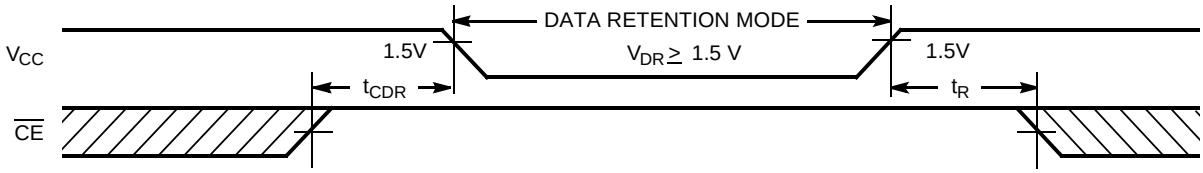

Notes:
8. Tested initially and after any design or process changes that may affect these parameters.
9. Full Device AC operation requires linear V_{CC} ramp from V_{DR} to $V_{CC(min.)} \geq 100$ µs or stable at $V_{CC(min.)} \geq 100$ µs.

Switching Characteristics (Over the Operating Range)[10]

Parameter	Description	55 ns		70 ns		Unit
		Min.	Max.	Min.	Max.	
Read Cycle						
t_{RC}	Read Cycle Time	55		70		ns
t_{AA}	Address to Data Valid		55		70	ns
t_{OHA}	Data Hold from Address Change	10		10		ns
t_{ACE}	$\overline{CE}$ LOW to Data Valid		55		70	ns
t_{DOE}	$\overline{OE}$ LOW to Data Valid		25		35	ns
t_{LZOE}	$\overline{OE}$ LOW to Low Z[11]	5		5		ns
t_{HZOE}	$\overline{OE}$ HIGH to High Z[11,12]		20		25	ns
t_{LZCE}	$\overline{CE}$ LOW to Low Z[11]	10		10		ns
t_{HZCE}	$\overline{CE}$ HIGH to High Z[11, 12]		20		25	ns
t_{PU}	$\overline{CE}$ LOW to Power-up	0		0		ns
t_{PD}	$\overline{CE}$ HIGH to Power-up		55		70	ns
Write Cycle[13]						
t_{WC}	Write Cycle Time	55		70		ns
t_{SCE}	$\overline{CE}$ LOW to Write End	40		45		ns
t_{AW}	Address Set-up to Write End	40		45		ns
t_{HA}	Address Hold from Write End	0		0		ns
t_{SA}	Address Set-up to Write Start	0		0		ns
t_{PWE}	$\overline{WE}$ Pulse Width	40		45		ns
t_{SD}	Data Set-up to Write End	25		30		ns
t_{HD}	Data Hold from Write End	0		0		ns
t_{HZWE}	$\overline{WE}$ LOW to High Z[11, 12]		20		25	ns
t_{LZWE}	$\overline{WE}$ HIGH to Low Z[11]	10		10		ns

Switching Waveforms

Read Cycle No. 1 (Address Transition Controlled)[14, 15]

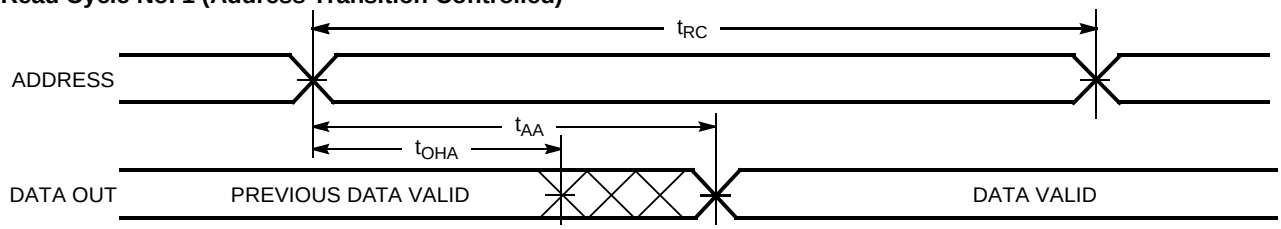

Notes:

10. Test Conditions for all parameters other than three-state parameters assume signal transition time of 3 ns or less (1 V/ns), timing reference levels of $V_{CC(typ)}/2$, input pulse levels of 0 to $V_{CC(typ)}$, and output loading of the specified I_{OL}/I_{OH} as shown in the "AC Test Loads and Waveforms" section.
11. At any given temperature and voltage condition, t_{HZCE} is less than t_{LZCE}, t_{HZOE} is less than t_{LZOE}, and t_{HZWE} is less than t_{LZWE} for any given device.
12. t_{HZOE}, t_{HZCE}, and t_{HZWE} transitions are measured when the output enter a high impedance state.
13. The internal write time of the memory is defined by the overlap of $\overline{WE}$, $\overline{CE} = V_{IL}$. All signals must be ACTIVE to initiate a write and any of these signals can terminate a write by going INACTIVE. The data input set-up and hold timing should be referenced to the edge of the signal that terminates the write.
14. Device is continuously selected. $\overline{OE}$, $\overline{CE} = V_{IL}$.
15. $\overline{WE}$ is HIGH for read cycle.

Switching Waveforms (continued)

Read Cycle No. 2 ($\overline{OE}$ Controlled) [15, 16]

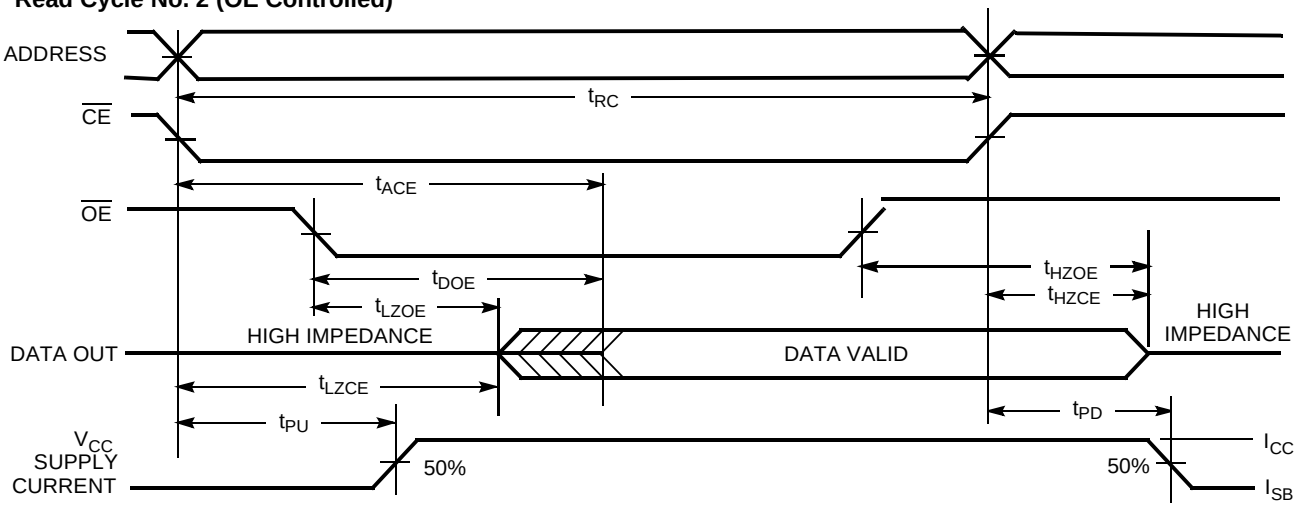

Write Cycle No. 1 ($\overline{WE}$ Controlled) [17, 19]

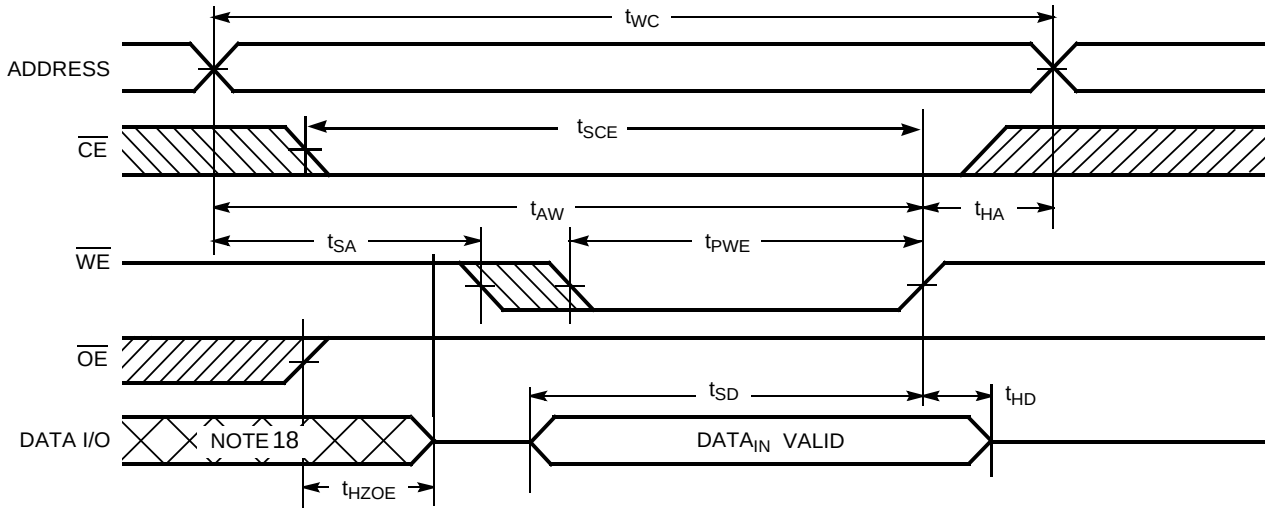

Notes:

16. Address valid prior to or coincident with $\overline{CE}$ transition LOW.
17. Data I/O is high impedance if OE = V_{IH}.
18. During this period, the I/Os are in output state and input signals should not be applied.
19. If CE goes HIGH simultaneously with WE HIGH, the output remains in high-impedance state.

Switching Waveforms (continued)

Write Cycle No. 2 ($\overline{CE}$ Controlled)[17, 19]

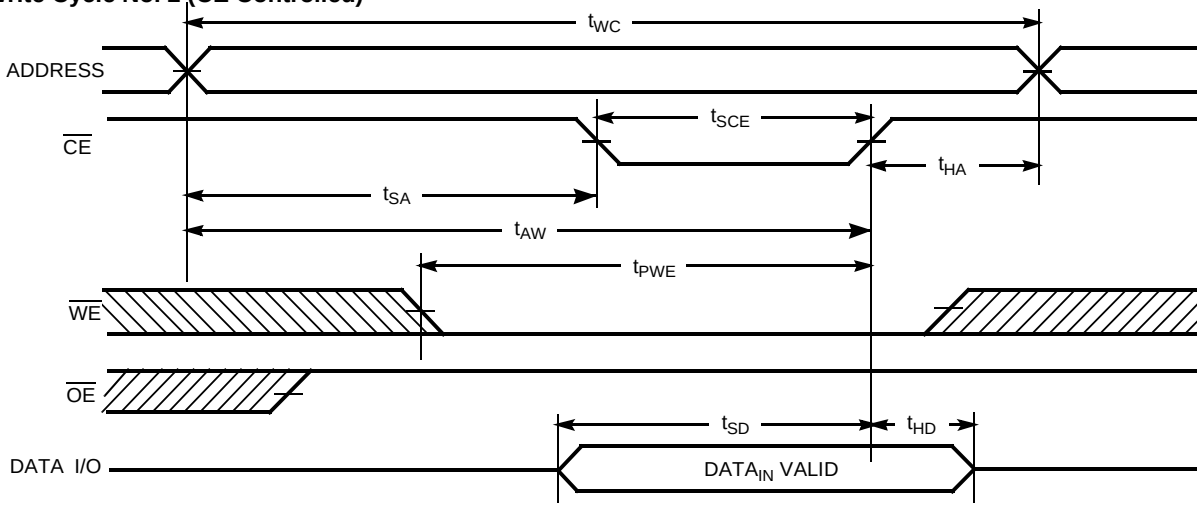

Write Cycle No. 3 ($\overline{WE}$ Controlled, $\overline{OE}$ LOW) [19]

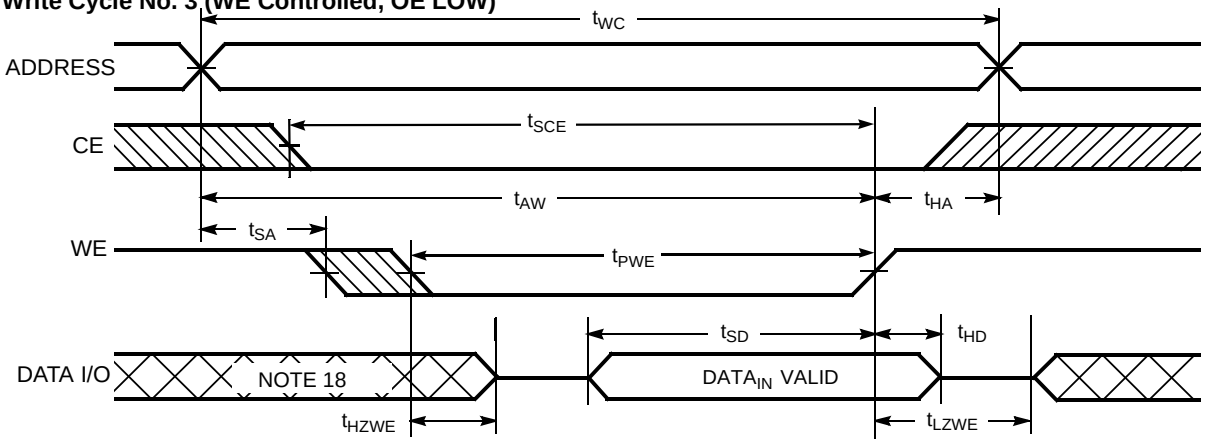

Truth Table

$\overline{CE}$	$\overline{WE}$	$\overline{OE}$	Inputs/Outputs	Mode	Power
H	X	X	High Z	Deselect/Power-down	Standby (I_{SB})
L	H	L	Data Out (I/O_0-I/O_7)	Read	Active (I_{CC})
L	H	H	High Z	Output Disabled	Active (Icc)
L	L	X	Data in (I/O_0-I/O_7)	Write	Active (Icc)

Ordering Information

Speed (ns)	Ordering Code	Package Name	Package Type	Operating Range
55	CY62148DV30L-55BVI	BV36A	36-ball Very Fine Pitch BGA (6 mm × 8 mm × 1 mm)	Industrial
	CY62148DV30LL-55BVI			
55	CY62148DV30L-55BVXI	BV36A	36-ball Very Fine Pitch BGA (6 mm × 8 mm × 1 mm) Pb-free	Industrial
	CY62148DV30LL-55BVXI			
55	CY62148DV30L-55ZSXI	ZS-32	32-pin TSOP II Pb-free	Industrial
	CY62148DV30LL-55ZSXI			
55	CY62148DV30L-55SXI	S-32	32-pin SOIC Pb-free	Industrial
	CY62148DV30LL-55SXI			

Ordering Information (continued)

Speed (ns)	Ordering Code	Package Name	Package Type	Operating Range
70	CY62148DV30L-70BVI	BV36A	36-ball Very Fine Pitch BGA (6 mm × 8 mm × 1 mm)	Industrial
	CY62148DV30LL-70BVI			
70	CY62148DV30L-70BVXI	BV36A	36-ball Very Fine Pitch BGA (6 mm × 8 mm × 1 mm) Pb-free	Industrial
	CY62148DV30LL-70BVXI			
70	CY62148DV30L-70ZSXI	ZS-32	32-pin TSOP II Pb-free	Industrial
	CY62148DV30LL-70ZSXI			
70	CY62148DV30L-70SXI	S-32	32-pin SOIC Pb-free	Industrial
	CY62148DV30LL-70SXI			

Package Diagrams

36-Lead FBGA (6 x 8 x 1 mm) BV36A

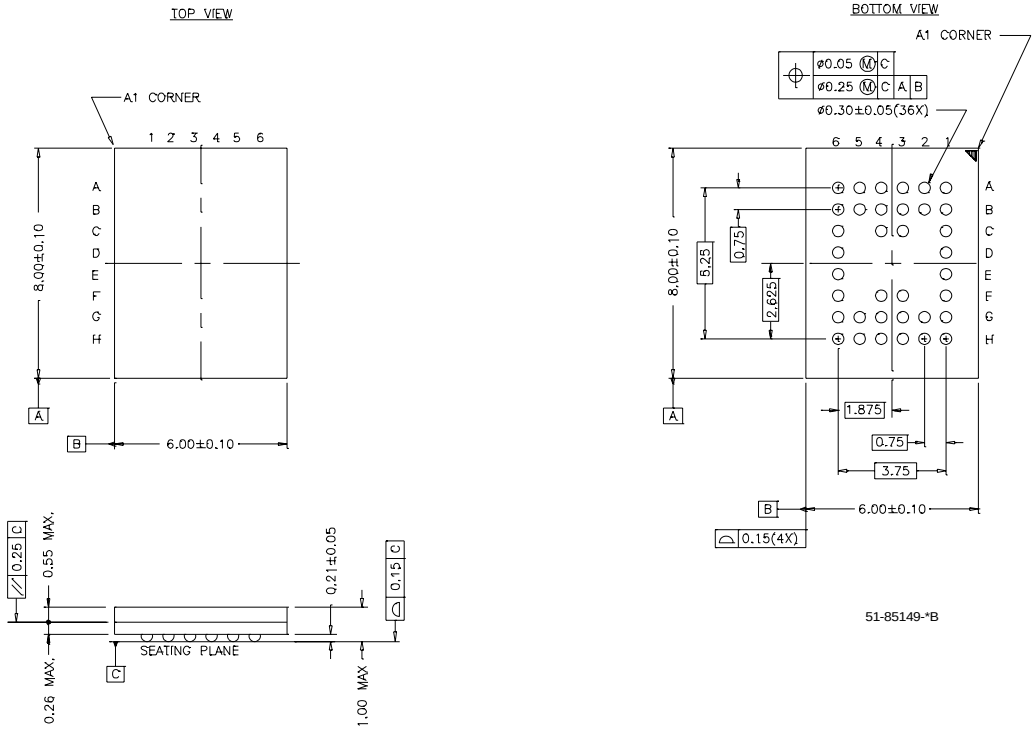

Package Diagrams (continued)

32-Lead TSOP II ZS32

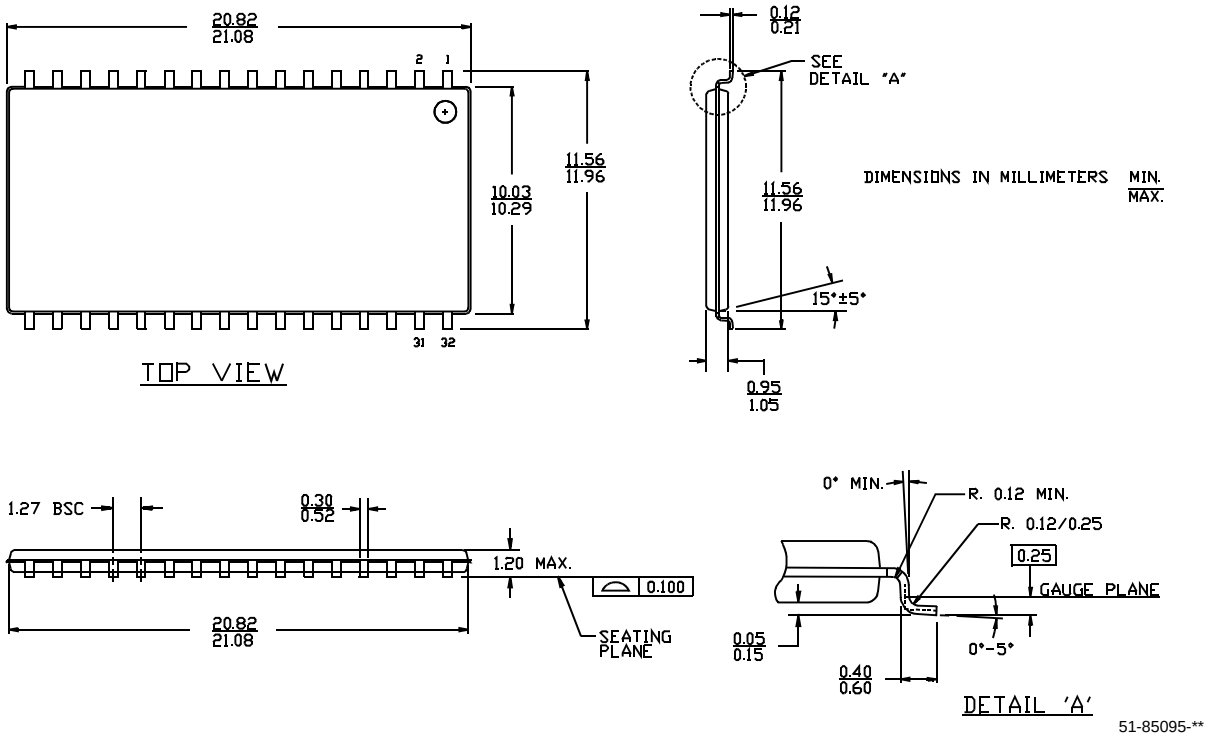

Package Diagrams (continued)

32-Lead (450 MIL) Molded SOIC S34

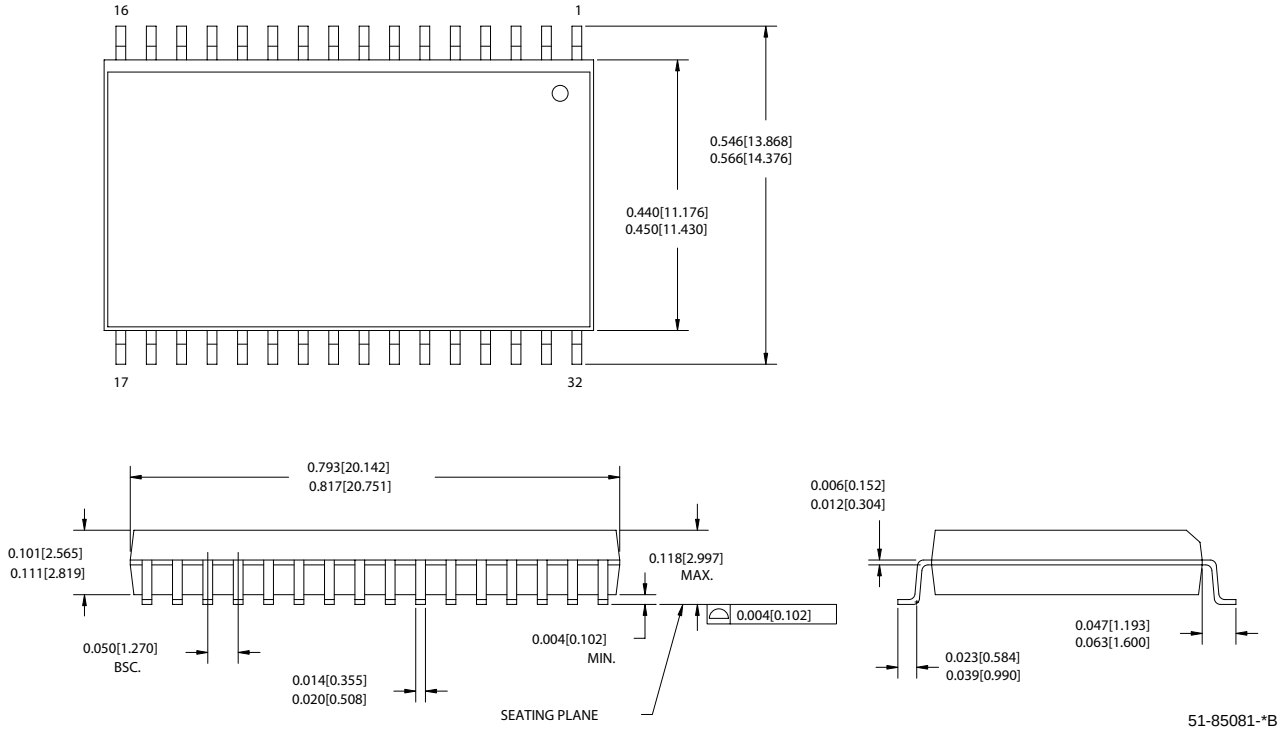

MoBL is a registered trademark, and More Battery Life is a trademark, of Cypress Semiconductor. All product and company names mentioned in this document may be the trademarks of their respective holders.

© Cypress Semiconductor Corporation, 2004. The information contained herein is subject to change without notice. Cypress Semiconductor Corporation assumes no responsibility for the use of any circuitry other than circuitry embodied in a Cypress Semiconductor product. Nor does it convey or imply any license under patent or other rights. Cypress Semiconductor does not authorize its products for use as critical components in life-support systems where a malfunction or failure may reasonably be expected to result in significant injury to the user. The inclusion of Cypress Semiconductor products in life-support systems application implies that the manufacturer assumes all risk of such use and in doing so indemnifies Cypress Semiconductor against all charges.

Document History Page

Document Title:CY62148DV30 4-Mb (512K x 8) MoBL® Static RAM Document Number: 38-05341				
REV.	**ECN NO.**	**Issue Date**	**Orig. of Change**	**Description of Change**
**	127480	06/17/03	HRT	Created new data sheet
*A	131041	01/23/04	CBD	Change from Advance to Preliminary
*B	222180	See ECN	AJU	Change from Preliminary to Final Added 70 ns speed bin Modified footnote #6 and #12 Removed MAX value for V_{DR} on “Data Retention Characteristics” table Modified input and output capacitance values Added Pb-free ordering information Removed 32-pin STSOP package