DN8650

7-circuit Darlington Driver Array

■ Overview

The DN8650, which is an NPN Darlington type buffer with PNP transistor for input, is a 7-circuit non-inverting type driver array.

■ Features

- 7-circuit buffer
- Low output breakdown voltage : $V_{CE(SUS)}$ =35V (min)
- Large output current : I_O=500mA (max)
- Low active input
- Directly connectable to MOS LSI and TTL in the 5V power supply system
- 16-pin plastic DIL package

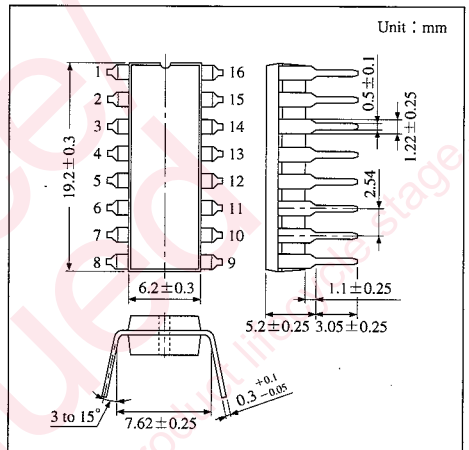

16-pin DIL Plastic Package (DIP016-P-0300D)

■ Block Diagram

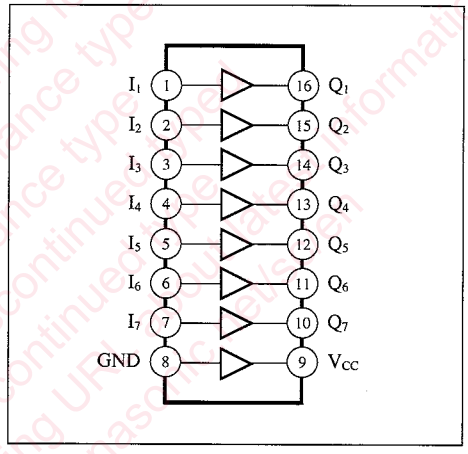

■ Schematic Diagram

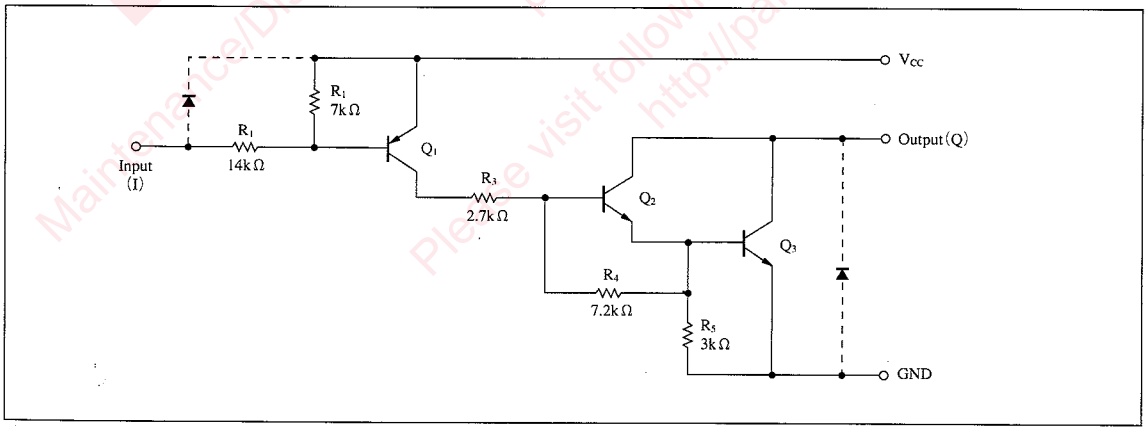

Maintenance/Discontinued
Maintenance/Discontinued includes following four types of planed maintenance type, planed discontinued type.
Please visit following URL for more information.
http://panasonic.net/semi/

■ Absolute Maximum Ratings (Ta=25℃)

Parameter	Symbol	Rating	Unit
Supply voltage	V_{CC}	−0.5 to +7.0	V
Input voltage	V_I	−22 to V_{CC}+0.5	V
Input current	I_I	10	mA
Output breakdown	$V_{CE(SUS)}$	−0.5 to+35	V
Output current	I_O	500	mA
GND pin current	I_{GND}	2.3	A
Power dissipation	P_D	1.0	W
Operating ambient temperature	T_{opr}	−20 to +75	℃
Storage temperature	T_{stg}	−55 to +150	℃

■ Recommended Operating Range (Ta=25℃)

Parameter	Symbol	min	typ	max	Unit
Supply voltage	V_{CC}	4.5	5.0	5.5	V
Output voltage	V_O	0	—	35	V
Output current	I_O	0	—	350 *1	mA
		0	—	300 *2	mA
Input voltage	V_I	−20	—	V_{CC}	V
Power consumption	P_O	—	—	0.44	W

*1 When one circuit operates at DC
*2 When all the seven circuits operate at t_{pw}=25ms and D_F=10%

■ Electrical Characteristics (Ta=25℃)

Parameter	Symbol	Condition	min	typ	max	Unit
Output leakage current	I_{OLK}	V_{CC}=5.5V, I_I=0, V_O=35V	—	—	100	μA
Output saturation voltage	$V_{CE(sat)}$	V_{CC}=4.5V, V_I=0.8V, I_O=350mA	—	1.4	2.2	V
Input current (output ON)	$I_{I(ON)}$	V_{CC}=5.5V, V_I=0.4V	—	−0.32	−0.45	mA
		V_{CC}=5.5V, V_I=−20V	—	—	−2.6	mA
Input current (output OFF)	$I_{I(OFF)}$		—	−100	−40	μA
Input voltage (output ON)	$V_{I(ON)}$		−20	—	V_{CC}−3.5	V
Current consumption (output ON)	$I_{CC(ON)}$	V_{CC}=5.5V, Total input	—	13.5	18.7	mA
Current consumption (output OFF)	$I_{CC(OFF)}$	V_{CC}=5.5V, Total input	—	—	100	μA
Turn-on time	t_{ON}	V_{CC}=5V, V_O=35V R_L=100Ω, C_L=15pF	—	0.1	—	μs
Turn-off time	t_{OFF}		—	3	—	μs

Others

Request for your special attention and precautions in using the technical information and semiconductors described in this book

(1) If any of the products or technical information described in this book is to be exported or provided to non-residents, the laws and regulations of the exporting country, especially, those with regard to security export control, must be observed.

(2) The technical information described in this book is intended only to show the main characteristics and application circuit examples of the products. No license is granted in and to any intellectual property right or other right owned by Panasonic Corporation or any other company. Therefore, no responsibility is assumed by our company as to the infringement upon any such right owned by any other company which may arise as a result of the use of technical information described in this book.

(3) The products described in this book are intended to be used for standard applications or general electronic equipment (such as office equipment, communications equipment, measuring instruments and household appliances).
Consult our sales staff in advance for information on the following applications:
- Special applications (such as for airplanes, aerospace, automobiles, traffic control equipment, combustion equipment, life support systems and safety devices) in which exceptional quality and reliability are required, or if the failure or malfunction of the products may directly jeopardize life or harm the human body.
- Any applications other than the standard applications intended.

(4) The products and product specifications described in this book are subject to change without notice for modification and/or improvement. At the final stage of your design, purchasing, or use of the products, therefore, ask for the most up-to-date Product Standards in advance to make sure that the latest specifications satisfy your requirements.

(5) When designing your equipment, comply with the range of absolute maximum rating and the guaranteed operating conditions (operating power supply voltage and operating environment etc.). Especially, please be careful not to exceed the range of absolute maximum rating on the transient state, such as power-on, power-off and mode-switching. Otherwise, we will not be liable for any defect which may arise later in your equipment.
 Even when the products are used within the guaranteed values, take into the consideration of incidence of break down and failure mode, possible to occur to semiconductor products. Measures on the systems such as redundant design, arresting the spread of fire or preventing glitch are recommended in order to prevent physical injury, fire, social damages, for example, by using the products.

(6) Comply with the instructions for use in order to prevent breakdown and characteristics change due to external factors (ESD, EOS, thermal stress and mechanical stress) at the time of handling, mounting or at customer's process. When using products for which damp-proof packing is required, satisfy the conditions, such as shelf life and the elapsed time since first opening the packages.

(7) This book may be not reprinted or reproduced whether wholly or partially, without the prior written permission of our company.

20080805