LOW DROPOUT VOLTAGE REGULATOR WITH ON/OFF CONTROL

■ GENERAL DESCRIPTION

The NJM2388 is low dropout voltage regulator with ON/OFF control. The output current is up to 1.0A and dropout voltage is 0.2V typ. at Io=0.5A.
The NJM2388 is suitable for power module, TV, Display, car stereo and low power applications.

■ PACKAGE OUTLINE

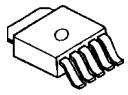

NJM2386DL2

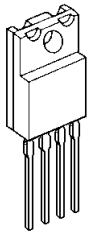

NJM2388F

■ FEATURE

- Low Dropout Voltage 0.2V typ. at Io=0.5A
- Output Current Io(max.)=1.0A
- ON/OFF Control (Active High)
- Internal Short Circuit Current Limit
- Internal Thermal Overload Protection
- Bipolar Technology
- Package Outline TO-252-5(NJM2386), TO-220F-4(NJM2388)

■ PIN CONFIGURATION

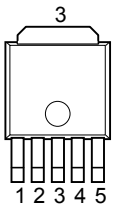

PIN FUNCTION
1. V_{IN}
2. ON/OFF CONTROL
3. V_{OUT}
4. N.C.
5. GND

NJM2386DL2

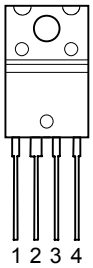

PIN FUNCTION
1. V_{IN}
2. V_{OUT}
3. GND
4. ON/OFF CONTROL

NJM2388F

■ EQUIVALENT CIRCUIT

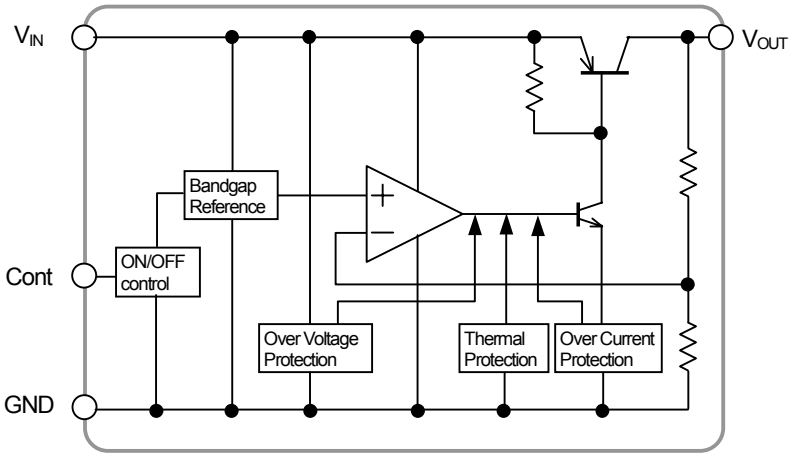

■ OUTPUT VOLTAGE RANK LIST

Device Name	V_{OUT}
NJM2386DL2-33	3.3V
NJM2386DL2-05	5.0V
NJM2386DL2-63	6.3V
NJM2386DL2-08	8.0V
NJM2386DL2-09	9.0V
NJM2386DL2-12	12.0V

Device Name	V_{OUT}
NJM2388F33	3.3V
NJM2388F05	5.0V
NJM2388F63	6.3V
NJM2388F08	8.0V
NJM2388F84	8.4V
NJM2388F09	9.0V
NJM2388F12	12.0V

■ ABSOLUTE MAXIMUM RATINGS (Ta=25°C)

PARAMETER	SYMBOL	RATINGS		UNIT
Input Voltage	V_{IN}	+35		V
Control Voltage	V_{CONT}	+35(*1)		V
Output Current	Io	1.0		A
Power Dissipation	P_D	NJM2386	10(Tc≤25°C) / 1(Ta≤25°C)	W
		NJM2388	18(Tc<50°C)	
Operating Junction Temperature Range	Tj	-40 ~ +150		°C
Operating Temperature Range	Topr	-40 ~ +85		°C
Storage Temperature Range	Tstg	-50 ~ +150		°C

(*1): When input voltage is less than +35V, the absolute maximum control voltage is equal to the input voltage.

■ ELECTRICAL CHARACTERISTICS (V_{IN}=V_O+1V, Io=0.5A, C_{IN}=0.33µF, Co=22µF, Ta=25°C)

Measurement is to be conducted is pulse testing.

PARAMETER		SYMBOL	CONDITIONS	MIN.	TYP.	MAX.	UNIT
Output Voltage		Vo	V_{IN}=V_O+1V	-2%	-	+2%	V
Line Regulation		ΔVo-V_{IN}	V_{IN}=V_O+1V ~ V_O+17V	-	0.04	0.16	%/V
Load Regulation		ΔVo-Io	V_{IN}=V_O+2V,Io=0A ~1.0A	-	0.2	1.4	%/A
Average Temperature Coefficient of Output Voltage		ΔVo/ΔT	Tj=0 ~ +125°C	-	±0.02	-	%/°C
Quiescent Current		I_Q	Io=0A	-	-	5	mA
Dropout Voltage		ΔV_{I-O}	Io=0.5A	-	0.2	0.5	V
Ripple Rejection	NJM238**33	RR	V_{IN}=V_O+2V, ein=0.5Vrms,f=120Hz	54	67	-	dB
	NJM238**05			54	67	-	
	NJM238**63			54	67	-	
	NJM238**08			52	65	-	
	NJM238**84			52	65	-	
	NJM238**09			52	65	-	
	NJM238**12			50	63	-	
ON Control Voltage		$V_{CONT(ON)}$		2.0(*2)	-	-	V
OFF Control Voltage		$V_{CONT(OFF)}$		-	-	0.4	V
ON Control Current		$I_{CONT(ON)}$	V_C=2.7V	-	-	20	µA
OFF Control Current		$I_{CONT(OFF)}$	V_C=0.4V	-	-	-20	µA

(*2): When ON/OFF CONTROL Terminal is open, Output Voltage is ON.

■ THERMAL CHARACTERISTICS

			NJM2386 (TO-252-5)	NJM2388 (TO-220F-4)	
Thermal Resistance	Junction-to-Ambient Temperature	θja	125	60	°C/W
	Junction to case	θjc	12.5	5	

■ POWER DISSIPATION vs. AMBIENT TEMPERATURE

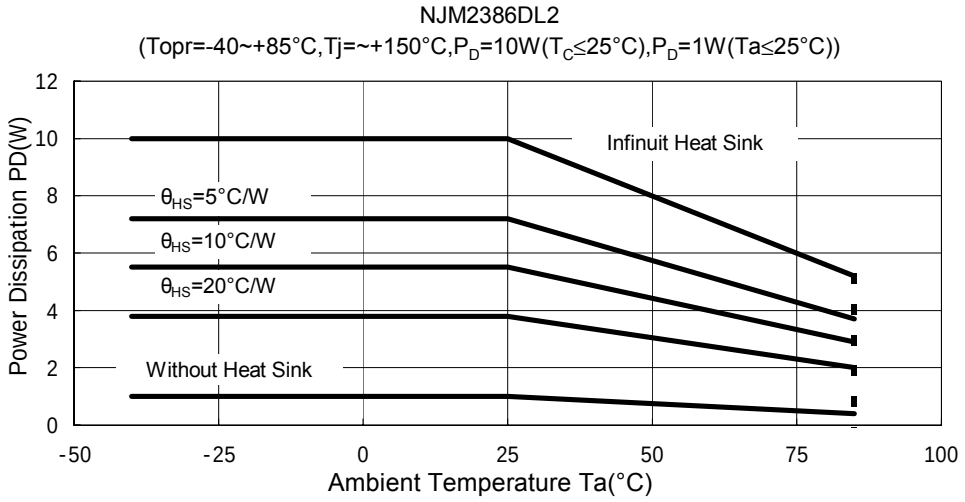

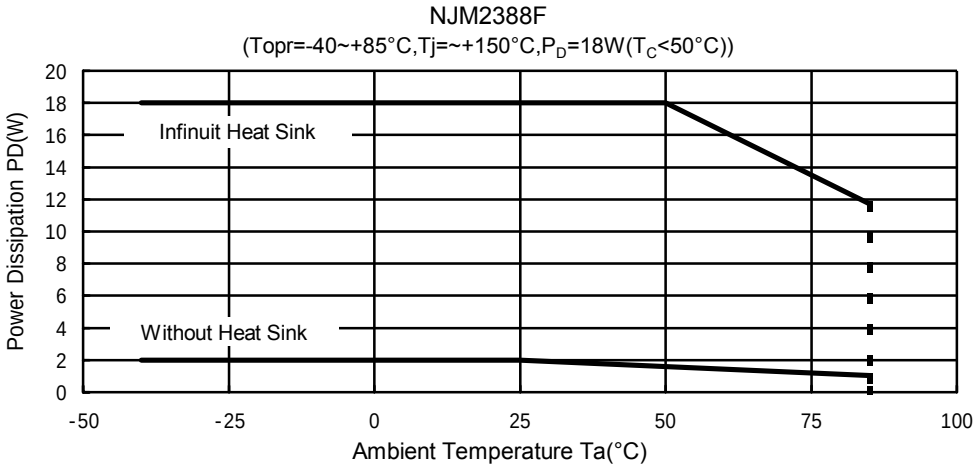

■ TEST CIRCUIT

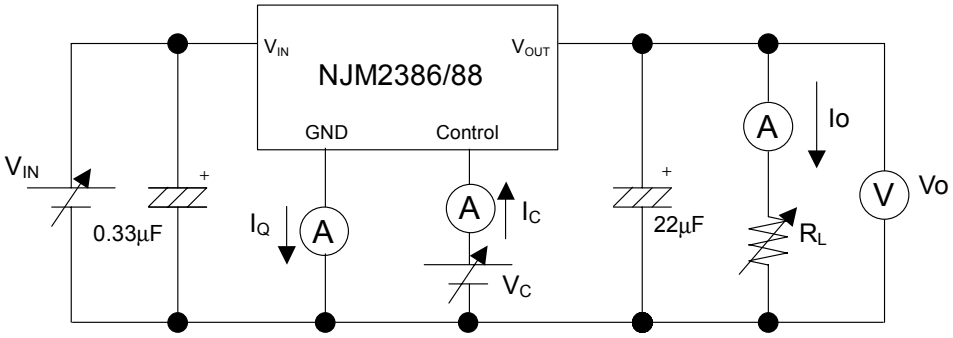

■ TYPICAL APPLICATION

① In the case where ON/OFF Control is not required:

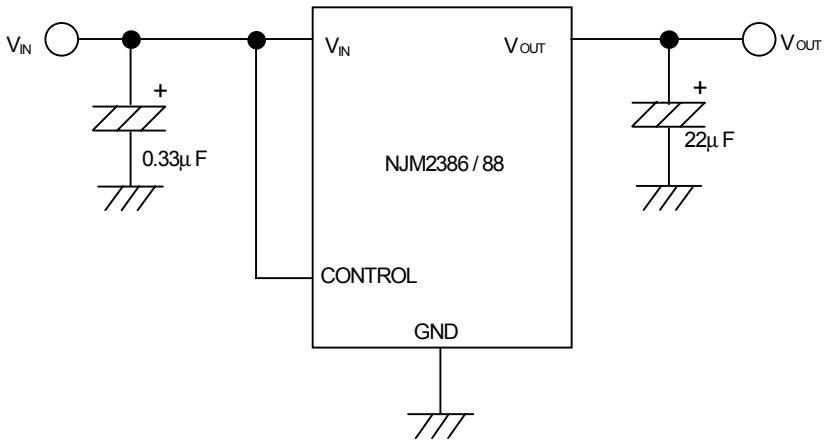

Connect control terminal to V_{IN} terminal or open.

② In use of ON/OFF CONTROL:

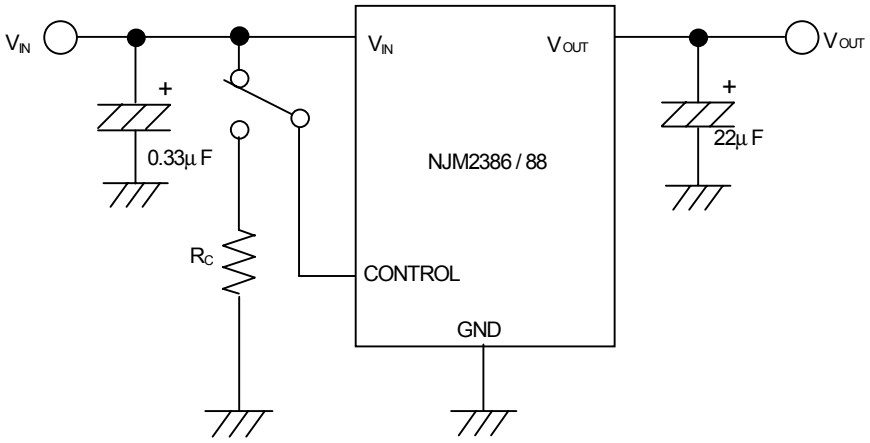

State of control terminal:

- "H" or "open" → output is enabled.
- "L" → output is disabled.

■ TYPICAL CHARACTERISTICS

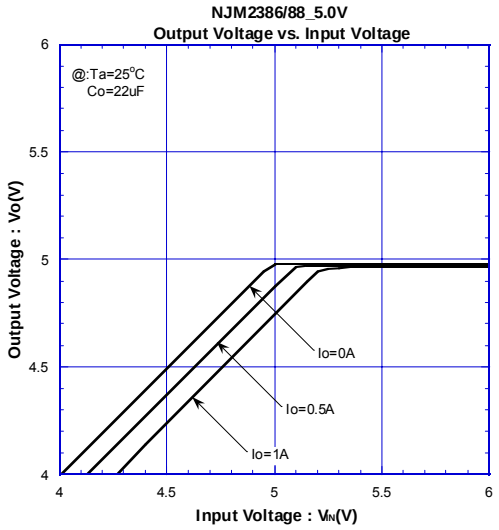

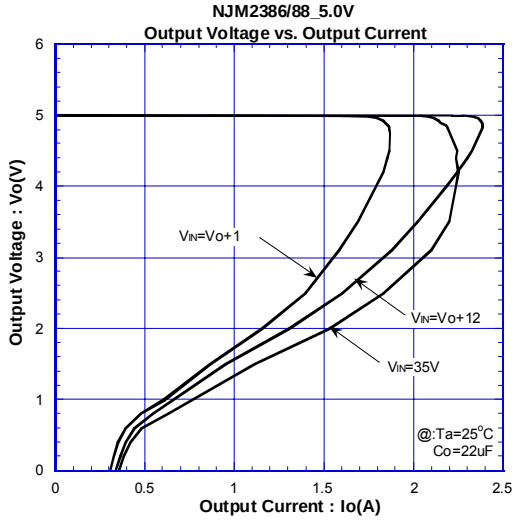

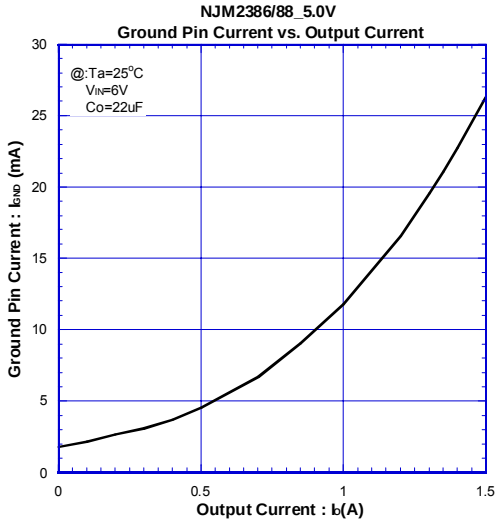

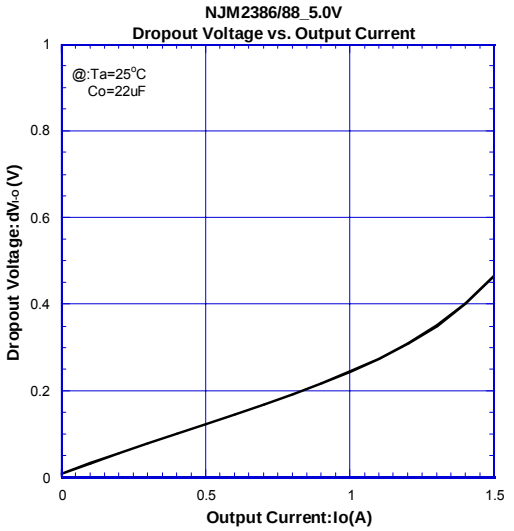

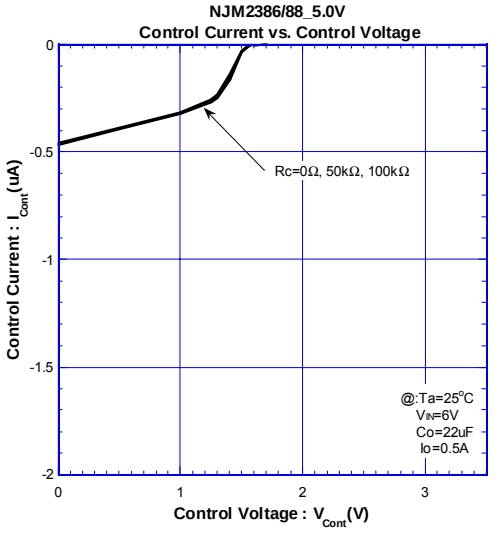

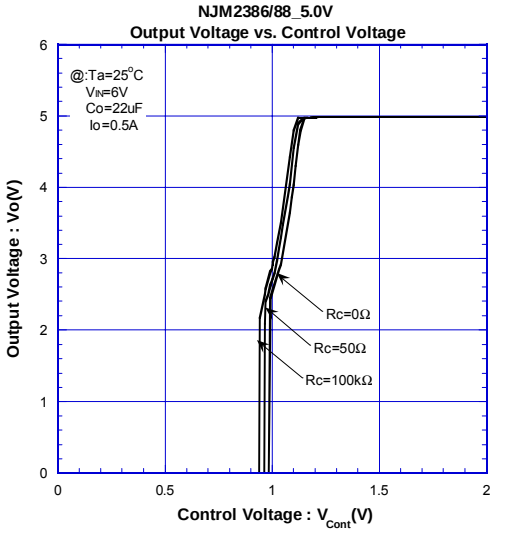

■ TYPICAL CHARACTERISTICS

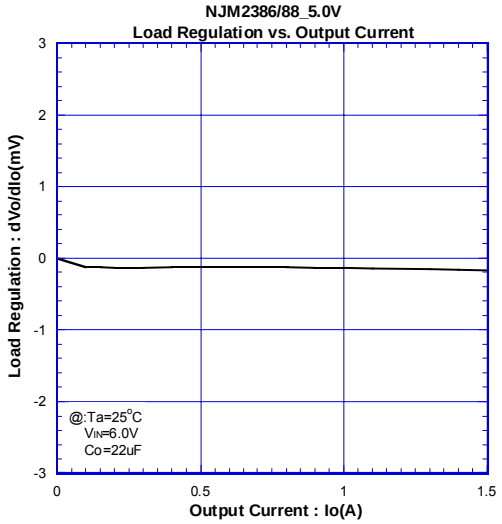

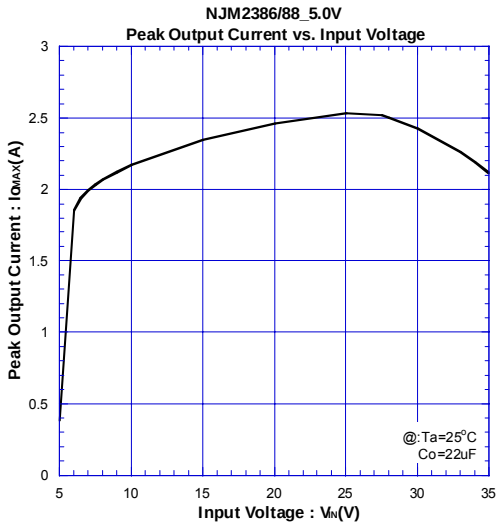

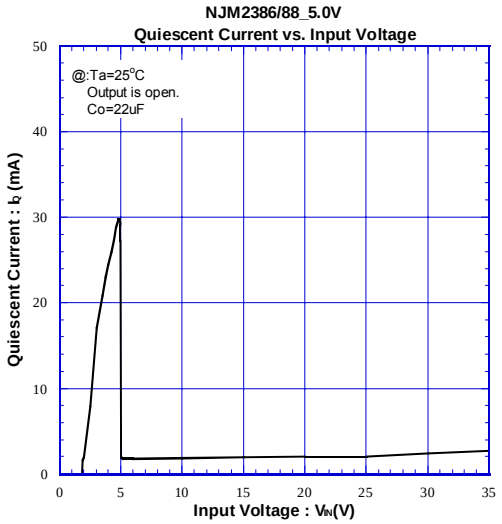

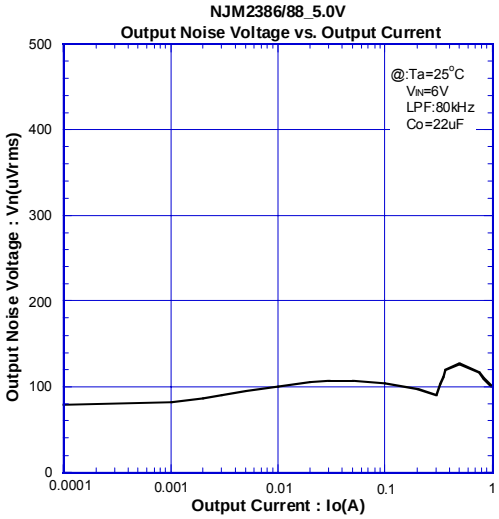

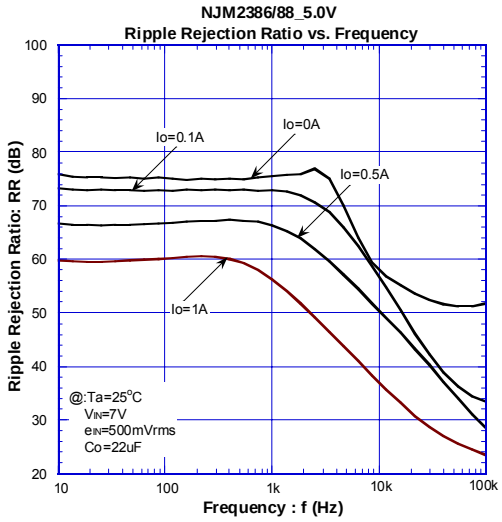

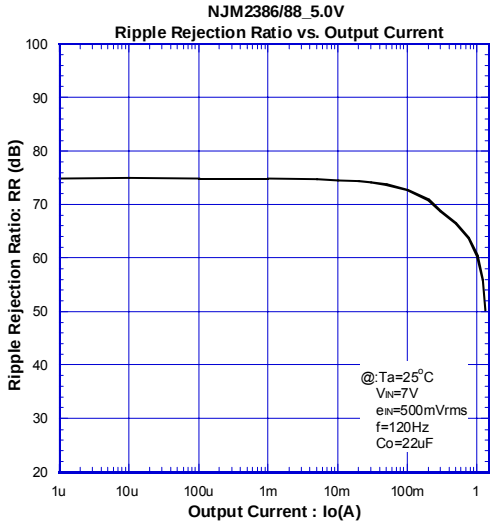

■ TYPICAL CHARACTERISTICS

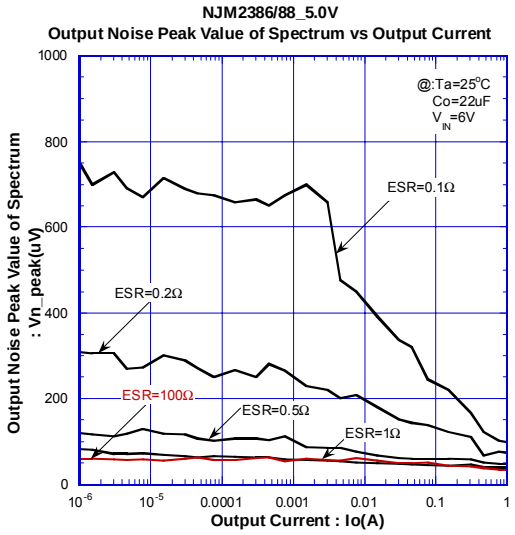

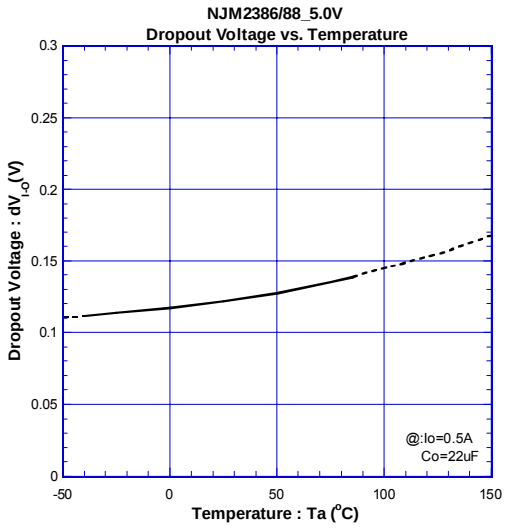

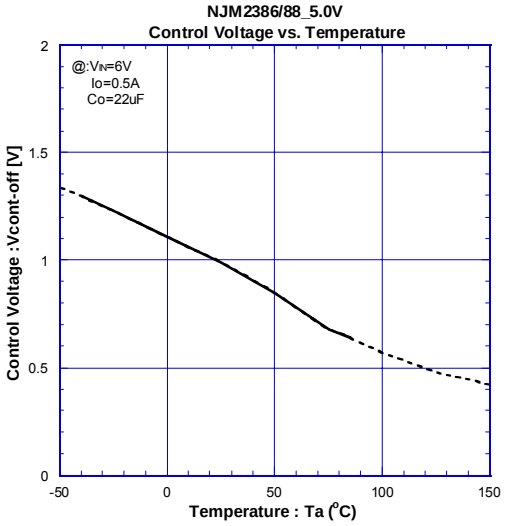

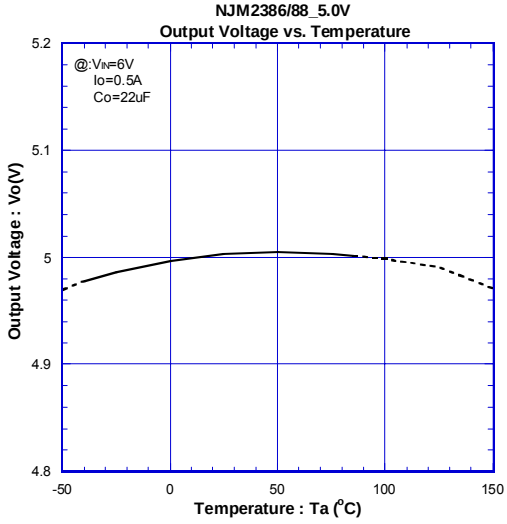

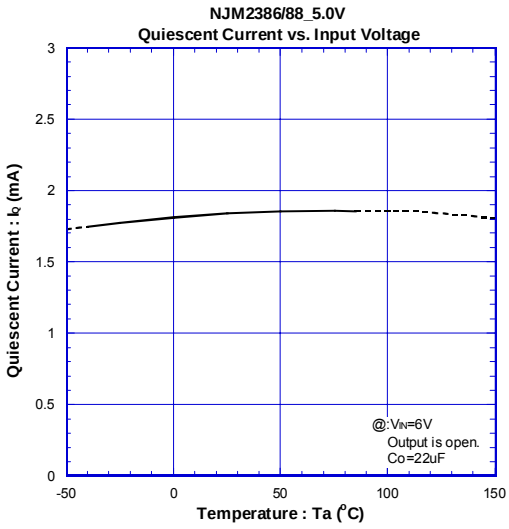

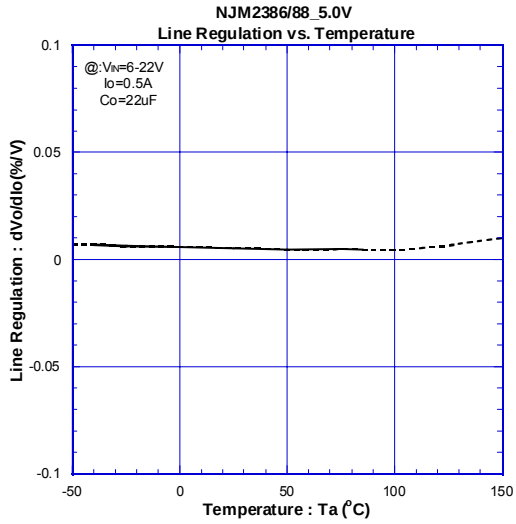

■ TYPICAL CHARACTERISTICS

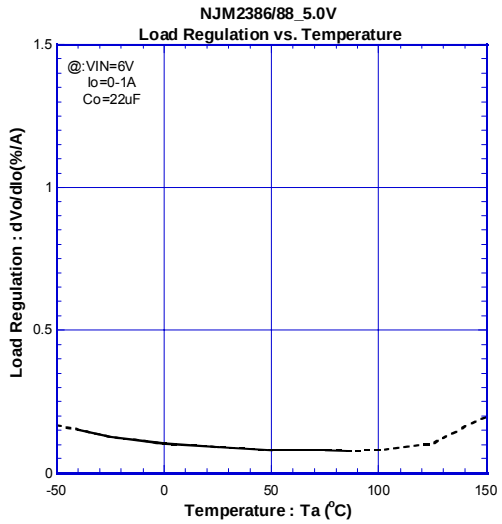

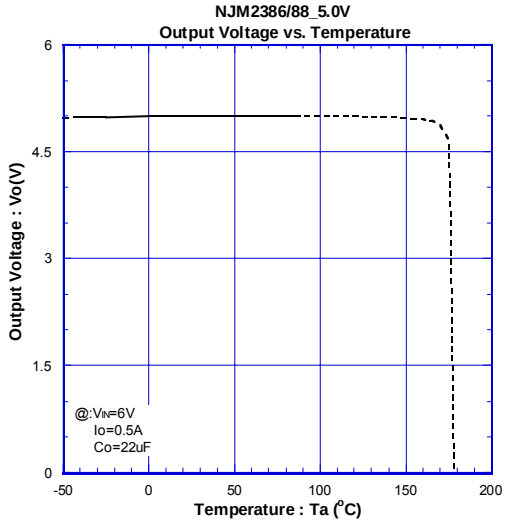

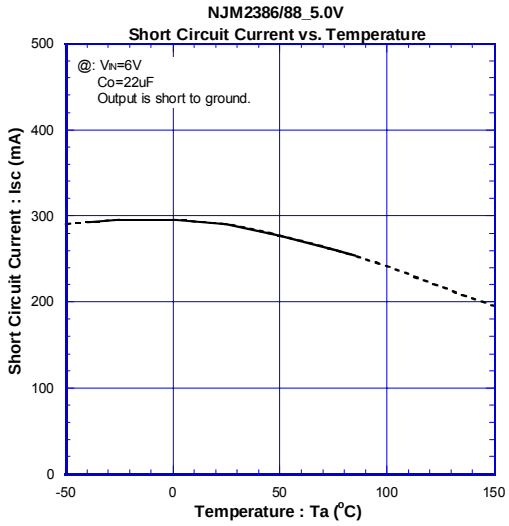

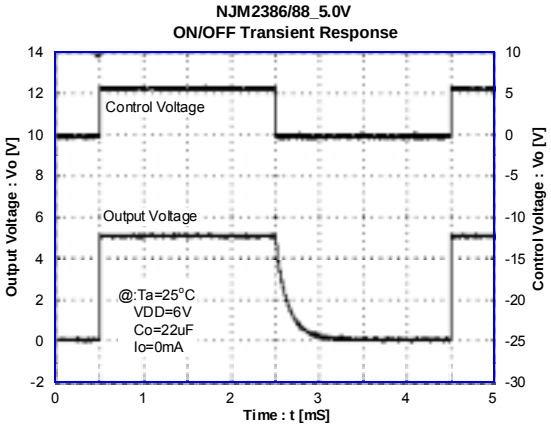

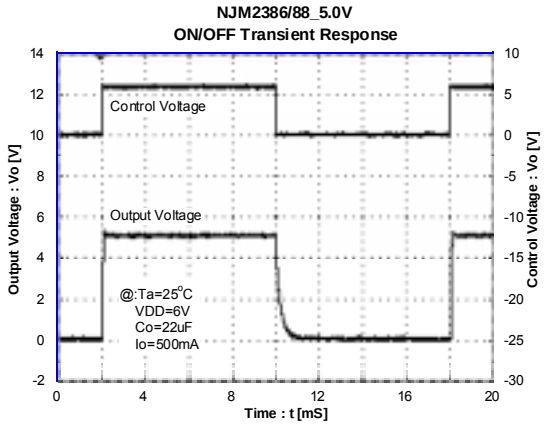

■ TYPICAL CHARACTERISTICS