UCC283−3, UCC283−5, UCC283−ADJ, UCC383−3, UCC383−5, UCC383−ADJ
LOW-DROPOUT 3-A LINEAR REGULATOR FAMILY

SLUS215B − OCTOBER 1998 − REVISED FEBRUARY 2004

- **Precision Positive Linear Series Pass Voltage Regulation**
- **0.45 V Dropout at 3 A**
- **50 mV Dropout at 10 mA**
- **Quiescent Current Under 650 μA Irrespective of Load**
- **Adjustable (5-Lead) Output Voltage Version**
- **Fixed (3-Lead) Versions for 3.3-V and 5-V Outputs**
- **Logic Shutdown Capability**
- **Short-Circuit Power Limit of ($3\% \times V_{IN} \times I_{SHORT}$)**
- **Low V_{OUT} to V_{IN} Reverse Leakage**
- **Thermal Shutdown**

TO−263−5 TD PACKAGE (FRONT VIEW)

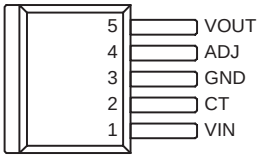

TO−263−3 TD PACKAGE (FRONT VIEW)

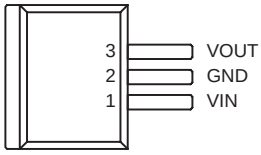

TO−220−5 T PACKAGE (FRONT VIEW)

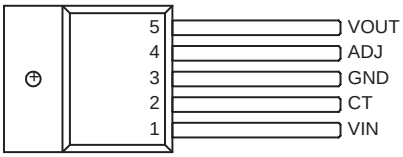

TO−220−3 T PACKAGE (FRONT VIEW)

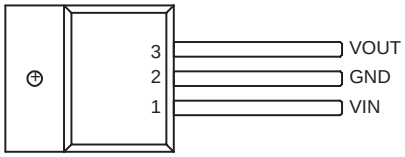

description

The UCC283−3/−5/−ADJ family of positive linear series pass voltage regulators are tailored for low-drop-out applications where low quiescent power is important. Fabricated with a BiCMOS technology ideally suited for low input-to-output differential applications, the UCC283−5 passes 3 A while requiring only 0.45 V of typical input voltage headroom (ensured 0.6-V dropout).

These regulators include reverse voltage sensing that prevents current in the reverse direction. Quiescent current is always less than 650 μA. These devices have been internally compensated in such a way that the need for a minimum output capacitor has been eliminated.

UCC283−3 and UCC283−5 versions are in 3-lead packages and have preset outputs at 3.3 V and 5.0 V respectively. The output voltage is regulated to 1.5% at room temperature. The UCC283−ADJ version, in a 5-lead package, regulates the output voltage programmed by an external resistor ratio.

Short-circuit current is internally limited. The device responds to a sustained overcurrent condition by turning off after a t_{ON} time delay. The device then stays off for a period, t_{OFF}, that is 32 times the t_{ON} delay. The device then begins pulsing on and off at the $t_{ON}/(t_{ON}+t_{OFF})$ duty cycle of 3%. This drastically reduces the power dissipation during short-circuit and means heat sinks need only accommodate normal operation. On the 3-leaded versions of the device t_{ON} is fixed at 750 μs, on the adjustable 5-leaded versions an external capacitor sets the on time. The off time is always $32 \times t_{ON}$. The external timing control pin, CT, on the 5-leaded versions also serves as a shutdown input when pulled low.

Internal power dissipation is further controlled with thermal overload protection circuitry. Thermal shutdown occurs if the junction temperature exceeds 165°C. The chip remains off until the temperature has dropped 20°C.

The UCC283 series is specified for operation over the industrial range of −40°C to 85°C, and the UCC383 series is specified from 0°C to 70°C. These devices are available in 3- and 5-pin TO−220 and TO−263 power packages.

Please be aware that an important notice concerning availability, standard warranty, and use in critical applications of Texas Instruments semiconductor products and disclaimers thereto appears at the end of this data sheet.

All trademarks are the property of their respective owners.

PRODUCTION DATA information is current as of publication date. Products conform to specifications per the terms of Texas Instruments standard warranty. Production processing does not necessarily include testing of all parameters.

Copyright © 1998−2004, Texas Instruments Incorporated

AVAILABLE OPTIONS(1)

T_A	OUTPUT VOLTAGE (V)			PACKAGE DEVICES			
				TO−263−3(2)	TO−263−5(2)	TO−220−3	TO−220−5
	MIN	TYP	MAX	TD		T	
−40°C to 85°C	3.22	3.3	3.58	UCC283TD−3	—	UCC283T−3	—
	4.875	5.00	5.125	UCC283TD−5	—	UCC283T−5	—
	ADJ			—	UCC283TD−ADJ	—	UCC283T−ADJ
0°C to 70°C	3.22	3.3	3.58	UCC383TD−3	—	UCC383T−3	—
	4.875	5.00	5.125	UCC383TD−5	—	UCC383T−5	—
	ADJ			—	UCC383TD−ADJ	—	UCC383T−ADJ

1. For more package and ordering information, see the Package Option Addendum located at the end of this data sheet.
2. For 50 piece reel, add KTTT (e.g., UCC283TDKTTT−3); for 500 piece reel, add TR (e.g., UCC283TDTR−3).

functional block diagram

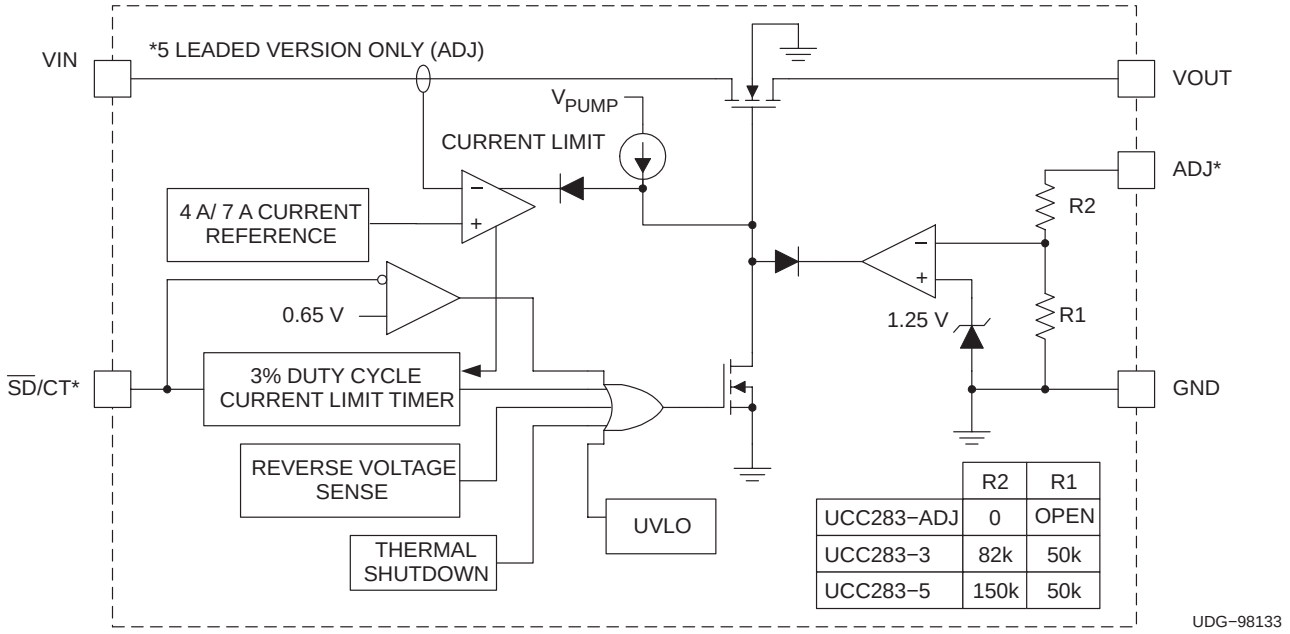

	R2	R1
UCC283−ADJ	0	OPEN
UCC283−3	82k	50k
UCC283−5	150k	50k

electrical characteristics T_A = 0°C to 70°C for the UCC383−x series, T_A = −40°C to 85°C for the UCC283−x, $V_{VIN} = V_{VOUT}$ + 1.5 V, I_{OUT} = 10 mA, C_{IN} = 10 µF, C_{OUT} = 22 µF. For the UCC283−ADJ, V_{VIN} = 6.5 V, V_{OUT} = 5.0 V, C_T = 750 pF, $T_J = T_A$ unless otherwise stated

PARAMETER	TEST CONDITIONS	MIN	TYP	MAX	UNITS
UCC283−5 Fixed 5 V, 3 A Family					
Output voltage	T_J = 25°C	4.925	5	5.075	V
	Over temperature	4.875		5.125	V
Line regulation	V_{VIN} = 5.15 V to 9 V		2	10	mV
Load regulation	I_{OUT} = 10 mA to 3 A		10	20	mV
Dropout voltage, $V_{DROPOUT} = V_{VIN} - V_{VOUT}$	I_{OUT} = 3 A, V_{OUT} = 4.85 V		0.4	0.6	V
	I_{OUT} = 1.5 A, V_{OUT} = 4.85 V		0.2	0.45	V
	I_{OUT} = 10 mA, V_{OUT} = 4.85 V		50	150	mV
Peak current limit	V_{VOUT} = 0 V	4	7	10	A
Overcurrent threshold		3	4	5.5	A
Current limit duty cycle	V_{VOUT} = 0 V		3%	5%	
Overcurrent time out, t_{ON}	V_{VOUT} = 0 V	400	750	1400	µs
Quiescent current	No load		400	650	µA
Reverse leakage current	1 V < V_{VIN} < V_{VOUT}, V_{VOUT} ≤ 5.1 V, at V_{VOUT}		30	75	µA
Undervoltage lockout	VIN where VOUT passes current	2.5	2.8	3	V
UCC283−3 Fixed 3.3 V, 3 A Family					
Output voltage	T_J = 25°C	3.25	3.3	3.35	V
	Over temperature	3.22		3.38	V
Line regulation voltage	V_{VIN} = 3.45 V to 9 V		2	7	mV
Load regulation voltage	I_{OUT} = 10 mA to 3 A		7	15	mV
Dropout voltage, $V_{DROPOUT} = V_{VIN} - V_{VOUT}$	I_{OUT} = 3A, VOUT = 3.15 V		0.5	1	V
	I_{OUT} = 1.5A, VOUT = 3.15 V		0.25	0.6	V
	I_{OUT} = 10mA, VOUT = 3.15 V		50	150	mV
Peak current limit	V_{VOUT} = 0 V	4	7	10	A
Overcurrent threshold		3	4	5.5	A
Current limit duty cycle	V_{VOUT} = 0 V		3%	5%	
Overcurrent time out, t_{ON}	V_{VOUT} = 0 V	400	750	1400	µs
Quiescent current	No load		400	650	µA
Reverse leakage current	1 V < V_{VIN} < V_{VOUT}, V_{VOUT} ≤ 3.35 V at V_{VOUT}		30	75	µA
Undervoltage lockout	VIN where VOUT passes current	2.5	2.8	3	V

electrical characteristics T_A = 0°C to 70°C for the UCC383−x series, T_A = −40°C to 85°C for the UCC283−x, $V_{VIN} = V_{VOUT}$ + 1.5 V, I_{OUT} = 10 mA, C_{IN} = 10 μF, C_{OUT} = 22 μF. For the UCC283−ADJ, V_{VIN} = 6.5 V, V_{OUT} = 5.0 V, C_T = 750 pF, $T_J = T_A$ unless otherwise stated

PARAMETER	TEST CONDITIONS	MIN	TYP	MAX	UNITS
UCC283−ADJ Adjustable Output, 3 A Family					
Regulating voltage at ADJ pin	TJ = 25°C	1.23	1.25	1.27	V
	Over temperature	1.22		1.28	V
Line regulation voltage, at ADJ input	$V_{VIN} = V_{VOUT}$ + 150 mV to 9 V		1	3	mV
Load regulation voltage, at ADJ input	I_{OUT} = 10 mA to 3 A		2	5	mV
Dropout voltage, $V_{DROPOUT}$ = VIN − VOUT	V_{OUT} = 4.85 V, I_{OUT} = 3 A		0.4	0.6	V
	V_{OUT} = 4.85 V, I_{OUT} = 1.5 A		0.2	0.45	V
	V_{OUT} = 4.85 V, I_{OUT} = 10 mA		50	150	mV
Peak current limit	V_{VOUT} = 0 V	4	7	10	A
Overcurrent threshold		3	4	5.5	A
Current limit duty cycle	V_{VOUT} = 0 V		3	5	%
Overcurrent time out, t_{ON}	V_{VOUT} = 0 V	300	575	1200	μs
Reverse leakage current	1 V < V_{VIN} < V_{VOUT} V_{VOUT} ≤ 9 V, at V_{VOUT}		30	100	μA
Bias current at ADJ input			20	250	nA
Quiescent current	No load		400	650	μA
Shutdown threshold	At CT input	0.25	0.65		V
Quiescent current in shutdown	V_{VIN} = 9 V		40	75	μA
UVLO	VIN where VOUT passes current	2.5	2.8	3	V

absolute maximum ratings over operating free-air temperature (unless otherwise noted)†

Input voltage
- VIN . . . . . 9 V
- CT . . . . . −0.3 V to 3 V
- ADJ . . . . . −0.3 V to 9 V

Storage Temperature, T_{stg} . . . . . −65°C to 150°C
Junction Temperature, T_J . . . . . −55°C to 150°C
Lead Temperature (soldering, 10 seconds) . . . . . 300°C

† Stresses beyond those listed under “absolute maximum ratings” may cause permanent damage to the device. These are stress ratings only, and functional operation of the device at these or any other conditions beyond those indicated under “recommended operating conditions” is not implied. Exposure to absolute-maximum-rated conditions for extended periods may affect device reliability.

pin descriptions

ADJ: Adjust pin for the UCC283−ADJ version only. Feedback pin for the linear regulator. Program the output voltage with R1 connected from ADJ to GND and R2 connected from VOUT to ADJ. Output voltage is given by:

$$V_{OUT} = \frac{1.25\ V \times (R1 + R2)}{R1}$$

CT: Short-circuit timing capacitor and shutdown input for the UCC283−ADJ version. Pulling CT below 0.25 V turns off the regulator and places it in a low quiescent-current mode. A timing capacitor, C, from CT to GND programs the duration of the pulsed short-circuit on-time. On-time, t_{ON}, is approximately given by:

$$t_{ON} = 750\ k \times C$$

GND: Reference ground.

VIN: Input voltage, This pin must be bypassed with a low ESL/ESR 1-µF or larger capacitor to GND. VIN can range from (VOUT + $V_{DROPOUT}$) to 9 V. If VIN is reduced to zero while VOUT is held high, the reverse leakage from VOUT to VIN is less than 75µA.

VOUT: Regulated output voltage. A bypass capacitor is not required at VOUT, but may be desired for good transient response. The bypass capacitor must not exceed a maximum value in order to insure the regulator can start.

APPLICATION INFORMATION

overview

The UCC383 family of low dropout linear (LDO) regulators provide a regulated output voltage for applications with up to 3 A of load current. The regulators feature a low dropout voltage and short-circuit protection, making their use ideal for demanding high-current applications requiring fault protection.

short-circuit-protection

The UCC383 provides unique short-circuit protection circuitry that reduces power dissipation during a fault. When an overload situation is detected, the device enters a pulsed mode of operation at 3% duty cycle reducing the heat sink requirements during a fault. The UCC383 has two current thresholds that determine its behavior during a fault as shown in Figure 1. When the regulator current exceeds the **overcurrent threshold** for a period longer than t_{ON}, the UCC383 shuts off for a period (t_{OFF}) which is $32 \times t_{ON}$. During an overload, the regulator actively limits the maximum current to the **peak current limit** value. The peak current limit is nominally 3 A greater than the overcurrent threshold. The regulator continues in pulsed mode until the fault is cleared as illustrated in Figure 1.

APPLICATION INFORMATION

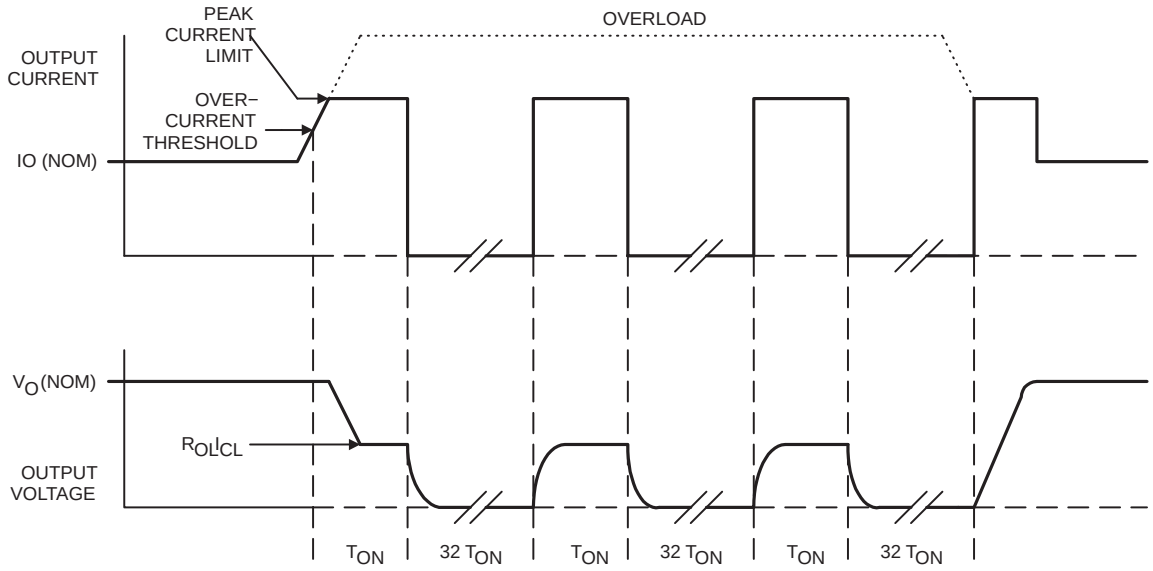

Figure 1. UCC383 Short-Circuit Timing

A capacitive load on the regulator's output appears as a short-circuit during start-up. If the capacitance is too large, the output voltage does not come into regulation during the initial t_{ON} period and the UCC383 enters pulsed mode operation. The peak current limit, t_{ON} period, and load characteristics determine the maximum value of output capacitor that can be charged. For a constant current load the maximum output capacitance is given as follows:

$$C_{OUT(max)} = \left(I_{CL} - I_{LOAD}\right) \times \frac{t_{ON}}{V_{OUT}} \quad \text{Farads} \tag{1}$$

For worst case calculations, the minimum values of on time (t_{ON}) and peak current limit (I_{CL}) should be used. The adjustable version allows the t_{ON} time to be adjusted with a capacitor on the CT pin:

$$t_{ON(adj)} = 750,000 \times C\ (\mu\ \text{Farad})\ \text{microseconds} \tag{2}$$

For a resistive load (R_{LOAD}) the maximum output capacitor can be estimated from:

$$C_{OUT(max)} = \frac{t_{ON(sec)}}{R_{LOAD} \times \ell n \left(\frac{1}{1 - \frac{VOUT}{I_{CL} \times R_{LOAD}}} \right)} \quad \text{Farads} \tag{3}$$

APPLICATION INFORMATION

dropout performance

Referring to the *Block Diagram*, the dropout voltage of the UCC383 is equal to the minimum voltage drop (V_{IN} to V_{OUT}) across the N-channel MOSFET. The dropout voltage is dependent on operating conditions such as load current, input and load voltages, as well as temperature. The UCC383 achieves a low Rds(on) through the use of an internal charge-pump (V_{PUMP}) that drives the MOSFET gate. Figure 2 depicts typical dropout voltages versus load current for the 3.3-V and 5-V versions of the part, as well as the adjustable version programmed to 3.0 V.

Figure 3 depicts the typical dropout performance of the adjustable version with various output voltages and load currents.

Operating temperatures also affect the Rds(on) and dropout voltage of the UCC383. Figure 4 graphs the typical dropout for the 3.3-V and 5-V versions with a 3-A load over temperature.

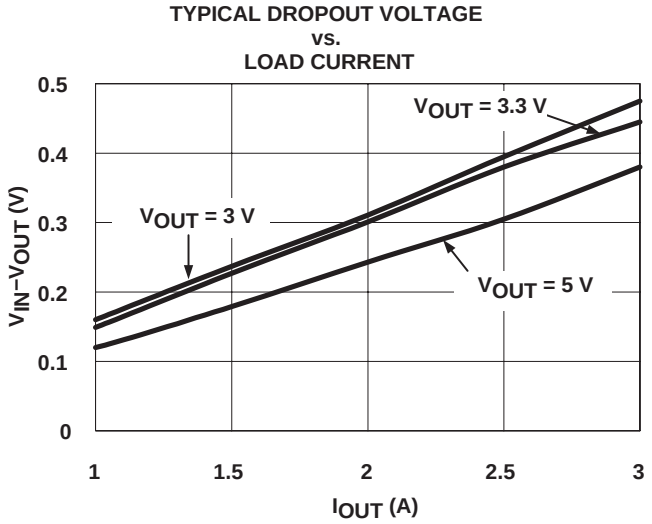

Figure 2

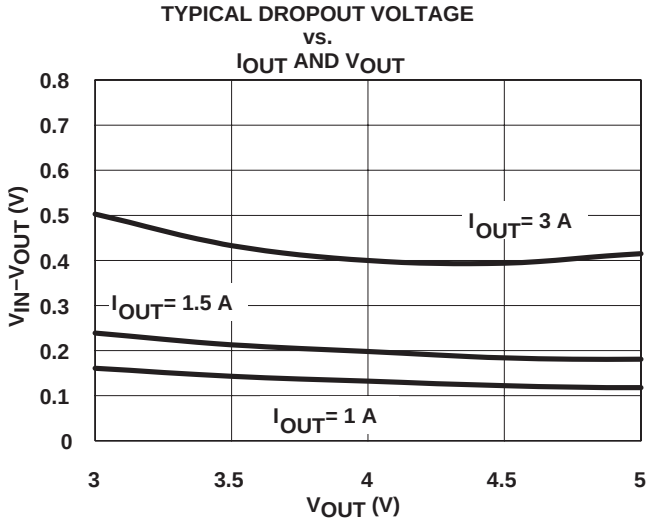

Figure 3

APPLICATION INFORMATION

voltage programming and shutdown feature for adjustable version

A typical application circuit based on the UCC383 adjustable version is shown in Figure 5. The output voltage is externally programmed through a resistive divider at the ADJ pin.

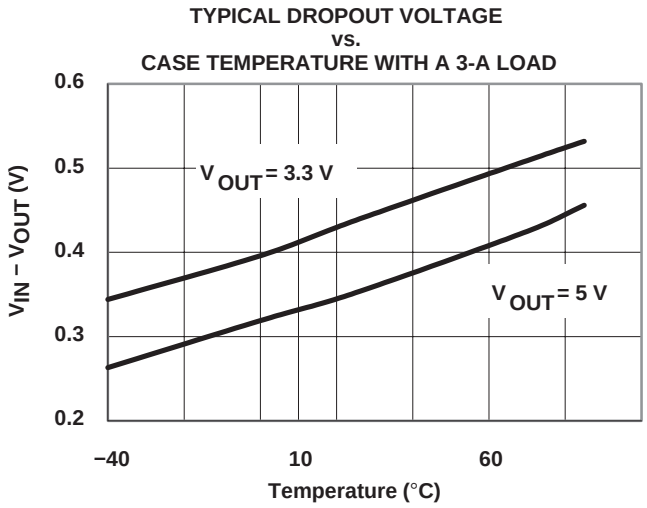

Figure 4

$$V_{OUT} = 1.25 \times \left(1 + \frac{R2}{R1}\right) \text{ Volts} \tag{4}$$

The maximum programmed output voltage is constrained by the 9-V absolute rating of the IC (this includes the charge pump voltage) and its ability to enhance the N-channel MOSFET. Unless the load current is below the 3-A rating of the device, output voltages above 7 V are not recommended. The minimum output voltage can be programmed down to 1.25 V. However, the input voltage must always be greater than the UVLO of the part.

The adjustable version includes a shutdown feature, limiting quiescent current to 40 μA typical. The UCC383 is shut down by pulling the CT pin to below 0.25 V. As shown in Figure 5, a small logic level MOSFET or BJT transistor in parallel with the timing capacitor can be driven with a digital signal, putting the device in shutdown. If the CT pin is not pulled low, the IC internally pulls up the pin enabling the regulator. The CT pin should not be forced high, as this interferes with the short-circuit-protection feature. Selection of the timing capacitor is explained in *Short-Circuit-Protection*.

The adjustable version can be used in applications requiring remote voltage sensing (i.e. monitoring a voltage other than or not directly tied to the VOUT pin). This is possible since the inverting input of the error-voltage amplifier (see *Block Diagram*) is brought out to the ADJ pin.

APPLICATION INFORMATION

thermal design

The *Package Information* section of the *Power Supply Control Products Data Book, Volume 3* (Literature No. SLUD003) contains reference material for the thermal ratings of various packages. The section also includes an excellent article *Thermal Characteristics of Surface Mount Packages*, that is the basis of the following discussion.

Thermal design for the UCC383 family of linear regulators includes two modes of operation, normal and pulsed mode. In normal operation, the linear regulator and heat sink must dissipate power equal to the maximum forward voltage drop multiplied by the maximum load current. Assuming a constant current load, the expected heat rise at the regulator's junction can be calculated as follows:

$$t_{RISE}(\theta) = P_{DISS} \times \left(\theta_{jc} + \theta_{ca}\right) \quad ^{\circ}C \tag{5}$$

Where theta, (θ) is thermal resistance and P_{DISS} is the power dissipated. The thermal resistance of both the TO−220 and TO−263 packages (junction to case) is 3°C per Watt. In order to prevent the regulator from going into thermal shutdown, the case to ambient theta must keep the junction temperature below 150°C. If the LDO is mounted on a 5-square inch pad of 1-ounce copper, for example, the thermal resistance from junction to ambient becomes 60°C per Watt. If a lower thermal resistance is required by the application, the device heat sinking would need to be improved.

When the UCC383 regulator is in pulsed mode due to an overload or short-circuit in the application, the maximum average power dissipation is calculated as follows:

$$P_{PULSE(avg)} = \left(V_{IN} - V_{OUT}\right) \times I_{CL} \times \frac{t_{ON}}{33 \times t_{ON}} \text{ Watts} \tag{6}$$

As seen in Equation 6, the average power during a fault is reduced dramatically by the duty cycle, allowing the heat sink to be sized for normal operation. Although the peak power in the regulator during the t_{ON} period can be significant, the thermal mass of the package generally keeps the junction temperature from rising unless the t_{ON} period is increased to tens of milliseconds.

ripple rejection

Even though the UCC383 family of linear regulators are not optimized for fast transient applications (Refer to the UC182 Fast LDO Linear Regulator), they do offer significant power supply rejection at lower frequencies. Figure 6 depicts ripple rejection performance in a typical application. The performance can be improved with additional filtering.

APPLICATION INFORMATION

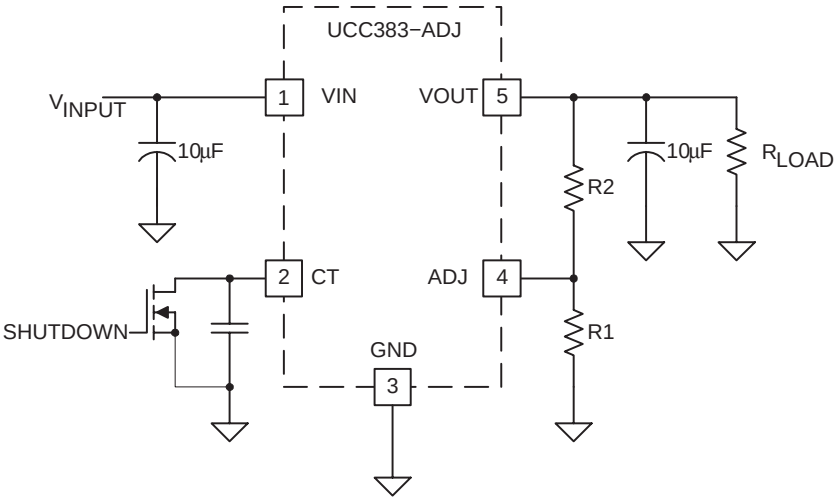

Figure 5. Typical Application for 5-Pin Adjustable Version

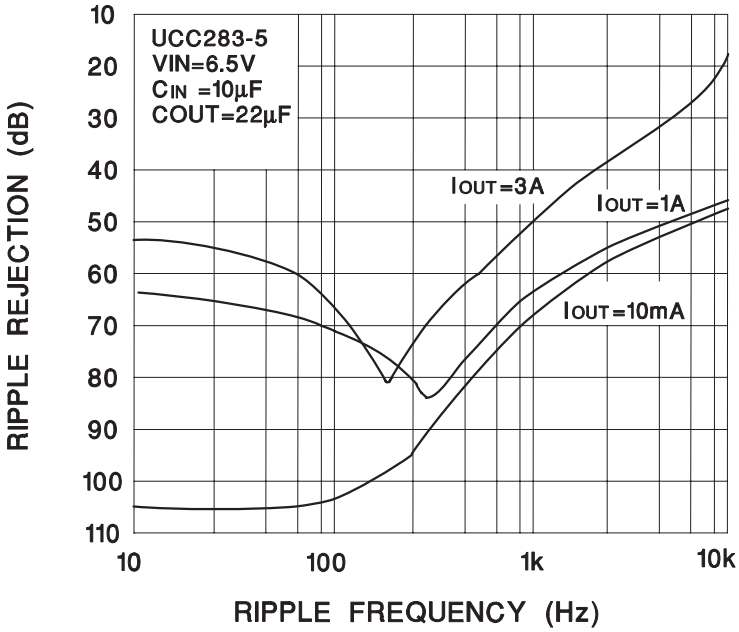

Figure 6. Ripple Rejection vs. Frequency

PACKAGING INFORMATION

Orderable Device	Status (1)	Package Type	Package Drawing	Pins	Package Qty	Eco Plan (2)	Lead/Ball Finish (6)	MSL Peak Temp (3)	Op Temp (°C)	Device Marking (4/5)	Samples
UCC283T-3	ACTIVE	TO-220	KC	3	50	Green (RoHS & no Sb/Br)	CU SN	N / A for Pkg Type	-40 to 85	UCC283T-3	Samples
UCC283T-3G3	ACTIVE	TO-220	KC	3	50	Green (RoHS & no Sb/Br)	CU SN	N / A for Pkg Type	-40 to 85	UCC283T-3	Samples
UCC283T-5	ACTIVE	TO-220	KC	3	50	Green (RoHS & no Sb/Br)	CU SN	N / A for Pkg Type	-40 to 85	UCC283T-5	Samples
UCC283T-5G3	ACTIVE	TO-220	KC	3	50	Green (RoHS & no Sb/Br)	CU SN	N / A for Pkg Type	-40 to 85	UCC283T-5	Samples
UCC283T-ADJ	ACTIVE	TO-220	KC	5	50	Green (RoHS & no Sb/Br)	CU SN	N / A for Pkg Type	-40 to 85	UCC283T-ADJ	Samples
UCC283T-ADJG3	ACTIVE	TO-220	KC	5	50	Green (RoHS & no Sb/Br)	CU SN	N / A for Pkg Type	-40 to 85	UCC283T-ADJ	Samples
UCC283TD-ADJ	OBSOLETE	DDPAK/ TO-263	KTT	5		TBD	Call TI	Call TI	-40 to 85		
UCC283TDKTTT-3	ACTIVE	DDPAK/ TO-263	KTT	3	50	Green (RoHS & no Sb/Br)	CU SN	Level-2-260C-1 YEAR	-40 to 85	UCC283TD-3	Samples
UCC283TDKTTT-3G3	ACTIVE	DDPAK/ TO-263	KTT	3	50	Green (RoHS & no Sb/Br)	CU SN	Level-2-260C-1 YEAR	-40 to 85	UCC283TD-3	Samples
UCC283TDKTTT-5	ACTIVE	DDPAK/ TO-263	KTT	3	50	Green (RoHS & no Sb/Br)	CU SN	Level-2-260C-1 YEAR	-40 to 85	UCC283TD-5	Samples
UCC283TDKTTT-5G3	ACTIVE	DDPAK/ TO-263	KTT	3	50	Green (RoHS & no Sb/Br)	CU SN	Level-2-260C-1 YEAR	-40 to 85	UCC283TD-5	Samples
UCC283TDKTTT-ADJ	ACTIVE	DDPAK/ TO-263	KTT	5	50	Green (RoHS & no Sb/Br)	CU SN	Level-2-260C-1 YEAR	-40 to 85	UCC283TD-ADJ	Samples
UCC283TDKTTT-ADJG3	ACTIVE	DDPAK/ TO-263	KTT	5	50	Green (RoHS & no Sb/Br)	CU SN	Level-2-260C-1 YEAR	-40 to 85	UCC283TD-ADJ	Samples
UCC283TDTR-3	ACTIVE	DDPAK/ TO-263	KTT	3	500	Green (RoHS & no Sb/Br)	CU SN	Level-2-260C-1 YEAR	-40 to 85	UCC283TD-3	Samples
UCC283TDTR-3G3	ACTIVE	DDPAK/ TO-263	KTT	3	500	Green (RoHS & no Sb/Br)	CU SN	Level-2-260C-1 YEAR	-40 to 85	UCC283TD-3	Samples
UCC283TDTR-ADJ	ACTIVE	DDPAK/ TO-263	KTT	5	500	Green (RoHS & no Sb/Br)	CU SN	Level-2-260C-1 YEAR	-40 to 85	UCC283TD-ADJ	Samples
UCC283TDTR-ADJG3	ACTIVE	DDPAK/ TO-263	KTT	5	500	Green (RoHS & no Sb/Br)	CU SN	Level-2-260C-1 YEAR	-40 to 85	UCC283TD-ADJ	Samples

Orderable Device	Status (1)	Package Type	Package Drawing	Pins	Package Qty	Eco Plan (2)	Lead/Ball Finish (6)	MSL Peak Temp (3)	Op Temp (°C)	Device Marking (4/5)	Samples
UCC383T-3	ACTIVE	TO-220	KC	3	50	Green (RoHS & no Sb/Br)	CU SN	N / A for Pkg Type	0 to 70	UCC383T-3	Samples
UCC383T-3G3	ACTIVE	TO-220	KC	3	50	Green (RoHS & no Sb/Br)	CU SN	N / A for Pkg Type	0 to 70	UCC383T-3	Samples
UCC383T-5	ACTIVE	TO-220	KC	3	50	Green (RoHS & no Sb/Br)	CU SN	N / A for Pkg Type	0 to 70	UCC383T-5	Samples
UCC383T-ADJ	ACTIVE	TO-220	KC	5	50	Green (RoHS & no Sb/Br)	CU SN	N / A for Pkg Type	0 to 70	UCC383T-ADJ	Samples
UCC383TD-3	OBSOLETE	DDPAK/ TO-263	KTT	3		TBD	Call TI	Call TI	0 to 70		
UCC383TD-5	OBSOLETE	DDPAK/ TO-263	KTT	3		TBD	Call TI	Call TI	0 to 70		
UCC383TD-ADJ	OBSOLETE	DDPAK/ TO-263	KTT	5		TBD	Call TI	Call TI	0 to 70		
UCC383TDKTTT-3	ACTIVE	DDPAK/ TO-263	KTT	3	50	Green (RoHS & no Sb/Br)	CU SN	Level-2-260C-1 YEAR	0 to 70	UCC383TD-3	Samples
UCC383TDKTTT-3G3	ACTIVE	DDPAK/ TO-263	KTT	3	50	Green (RoHS & no Sb/Br)	CU SN	Level-2-260C-1 YEAR	0 to 70	UCC383TD-3	Samples
UCC383TDKTTT-5	ACTIVE	DDPAK/ TO-263	KTT	3	50	Green (RoHS & no Sb/Br)	CU SN	Level-2-260C-1 YEAR	0 to 70	UCC383TD-5	Samples
UCC383TDKTTT-5G3	ACTIVE	DDPAK/ TO-263	KTT	3	50	Green (RoHS & no Sb/Br)	CU SN	Level-2-260C-1 YEAR	0 to 70	UCC383TD-5	Samples
UCC383TDKTTT-ADJ	ACTIVE	DDPAK/ TO-263	KTT	5	50	Green (RoHS & no Sb/Br)	CU SN	Level-2-260C-1 YEAR	0 to 70	UCC383TD-ADJ	Samples
UCC383TDKTTT-ADJG3	ACTIVE	DDPAK/ TO-263	KTT	5	50	Green (RoHS & no Sb/Br)	CU SN	Level-2-260C-1 YEAR	0 to 70	UCC383TD-ADJ	Samples
UCC383TDTR-3	ACTIVE	DDPAK/ TO-263	KTT	3	500	Green (RoHS & no Sb/Br)	CU SN	Level-2-260C-1 YEAR	0 to 70	UCC383TD-3	Samples
UCC383TDTR-3G3	ACTIVE	DDPAK/ TO-263	KTT	3	500	Green (RoHS & no Sb/Br)	CU SN	Level-2-260C-1 YEAR	0 to 70	UCC383TD-3	Samples
UCC383TDTR-ADJ	ACTIVE	DDPAK/ TO-263	KTT	5	500	Green (RoHS & no Sb/Br)	CU SN	Level-2-260C-1 YEAR	0 to 70	UCC383TD-ADJ	Samples
UCC383TDTR-ADJG3	ACTIVE	DDPAK/ TO-263	KTT	5	500	Green (RoHS & no Sb/Br)	CU SN	Level-2-260C-1 YEAR	0 to 70	UCC383TD-ADJ	Samples

(1) The marketing status values are defined as follows:

ACTIVE: Product device recommended for new designs.
LIFEBUY: TI has announced that the device will be discontinued, and a lifetime-buy period is in effect.
NRND: Not recommended for new designs. Device is in production to support existing customers, but TI does not recommend using this part in a new design.
PREVIEW: Device has been announced but is not in production. Samples may or may not be available.
OBSOLETE: TI has discontinued the production of the device.

(2) Eco Plan - The planned eco-friendly classification: Pb-Free (RoHS), Pb-Free (RoHS Exempt), or Green (RoHS & no Sb/Br) - please check http://www.ti.com/productcontent for the latest availability information and additional product content details.
TBD: The Pb-Free/Green conversion plan has not been defined.
Pb-Free (RoHS): TI's terms "Lead-Free" or "Pb-Free" mean semiconductor products that are compatible with the current RoHS requirements for all 6 substances, including the requirement that lead not exceed 0.1% by weight in homogeneous materials. Where designed to be soldered at high temperatures, TI Pb-Free products are suitable for use in specified lead-free processes.
Pb-Free (RoHS Exempt): This component has a RoHS exemption for either 1) lead-based flip-chip solder bumps used between the die and package, or 2) lead-based die adhesive used between the die and leadframe. The component is otherwise considered Pb-Free (RoHS compatible) as defined above.
Green (RoHS & no Sb/Br): TI defines "Green" to mean Pb-Free (RoHS compatible), and free of Bromine (Br) and Antimony (Sb) based flame retardants (Br or Sb do not exceed 0.1% by weight in homogeneous material)

(3) MSL, Peak Temp. - The Moisture Sensitivity Level rating according to the JEDEC industry standard classifications, and peak solder temperature.

(4) There may be additional marking, which relates to the logo, the lot trace code information, or the environmental category on the device.

(5) Multiple Device Markings will be inside parentheses. Only one Device Marking contained in parentheses and separated by a "~" will appear on a device. If a line is indented then it is a continuation of the previous line and the two combined represent the entire Device Marking for that device.

(6) Lead/Ball Finish - Orderable Devices may have multiple material finish options. Finish options are separated by a vertical ruled line. Lead/Ball Finish values may wrap to two lines if the finish value exceeds the maximum column width.

Important Information and Disclaimer: The information provided on this page represents TI's knowledge and belief as of the date that it is provided. TI bases its knowledge and belief on information provided by third parties, and makes no representation or warranty as to the accuracy of such information. Efforts are underway to better integrate information from third parties. TI has taken and continues to take reasonable steps to provide representative and accurate information but may not have conducted destructive testing or chemical analysis on incoming materials and chemicals. TI and TI suppliers consider certain information to be proprietary, and thus CAS numbers and other limited information may not be available for release.

In no event shall TI's liability arising out of such information exceed the total purchase price of the TI part(s) at issue in this document sold by TI to Customer on an annual basis.

TAPE AND REEL INFORMATION

REEL DIMENSIONS

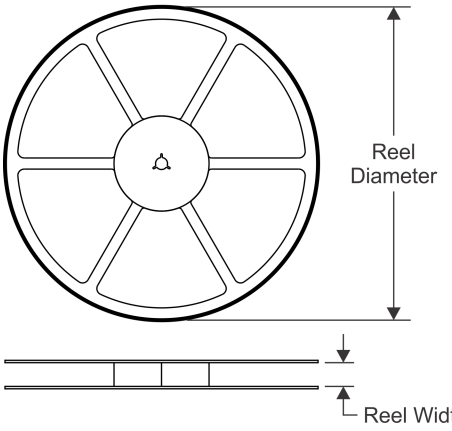

TAPE DIMENSIONS

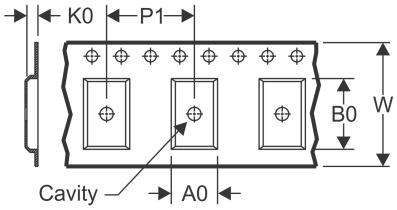

A0	Dimension designed to accommodate the component width
B0	Dimension designed to accommodate the component length
K0	Dimension designed to accommodate the component thickness
W	Overall width of the carrier tape
P1	Pitch between successive cavity centers

QUADRANT ASSIGNMENTS FOR PIN 1 ORIENTATION IN TAPE

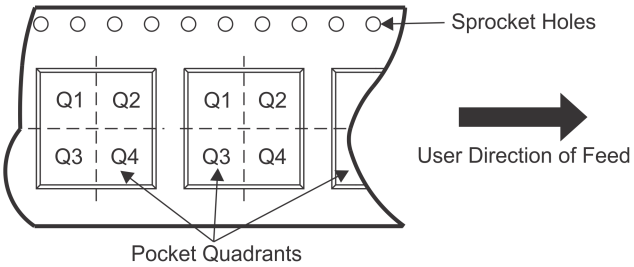

*All dimensions are nominal

Device	Package Type	Package Drawing	Pins	SPQ	Reel Diameter (mm)	Reel Width W1 (mm)	A0 (mm)	B0 (mm)	K0 (mm)	P1 (mm)	W (mm)	Pin1 Quadrant
UCC283TDKTTT-3	DDPAK/ TO-263	KTT	3	50	330.0	24.4	10.6	15.6	4.9	16.0	24.0	Q2
UCC283TDKTTT-5	DDPAK/ TO-263	KTT	3	50	330.0	24.4	10.6	15.6	4.9	16.0	24.0	Q2
UCC283TDKTTT-ADJ	DDPAK/ TO-263	KTT	5	50	330.0	24.4	10.6	15.6	4.9	16.0	24.0	Q2
UCC283TDTR-3	DDPAK/ TO-263	KTT	3	500	330.0	24.4	10.6	15.6	4.9	16.0	24.0	Q2
UCC283TDTR-ADJ	DDPAK/ TO-263	KTT	5	500	330.0	24.4	10.6	15.6	4.9	16.0	24.0	Q2
UCC383TDKTTT-3	DDPAK/ TO-263	KTT	3	50	330.0	24.4	10.6	15.6	4.9	16.0	24.0	Q2
UCC383TDKTTT-5	DDPAK/ TO-263	KTT	3	50	330.0	24.4	10.6	15.6	4.9	16.0	24.0	Q2
UCC383TDKTTT-ADJ	DDPAK/ TO-263	KTT	5	50	330.0	24.4	10.6	15.6	4.9	16.0	24.0	Q2
UCC383TDTR-3	DDPAK/ TO-263	KTT	3	500	330.0	24.4	10.6	15.6	4.9	16.0	24.0	Q2
UCC383TDTR-ADJ	DDPAK/ TO-263	KTT	5	500	330.0	24.4	10.6	15.6	4.9	16.0	24.0	Q2

TAPE AND REEL BOX DIMENSIONS

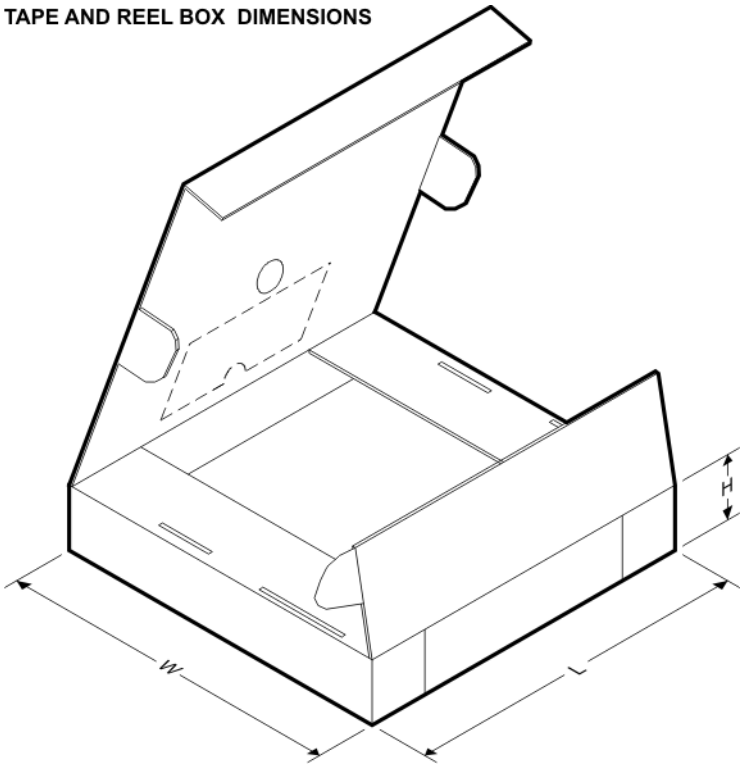

*All dimensions are nominal

Device	Package Type	Package Drawing	Pins	SPQ	Length (mm)	Width (mm)	Height (mm)
UCC283TDKTTT-3	DDPAK/TO-263	KTT	3	50	367.0	367.0	45.0
UCC283TDKTTT-5	DDPAK/TO-263	KTT	3	50	367.0	367.0	45.0
UCC283TDKTTT-ADJ	DDPAK/TO-263	KTT	5	50	367.0	367.0	45.0
UCC283TDTR-3	DDPAK/TO-263	KTT	3	500	367.0	367.0	45.0
UCC283TDTR-ADJ	DDPAK/TO-263	KTT	5	500	367.0	367.0	45.0
UCC383TDKTTT-3	DDPAK/TO-263	KTT	3	50	367.0	367.0	45.0
UCC383TDKTTT-5	DDPAK/TO-263	KTT	3	50	367.0	367.0	45.0
UCC383TDKTTT-ADJ	DDPAK/TO-263	KTT	5	50	367.0	367.0	45.0
UCC383TDTR-3	DDPAK/TO-263	KTT	3	500	367.0	367.0	45.0
UCC383TDTR-ADJ	DDPAK/TO-263	KTT	5	500	367.0	367.0	45.0

KTT (R–PSFM–G3) PLASTIC FLANGE–MOUNT PACKAGE

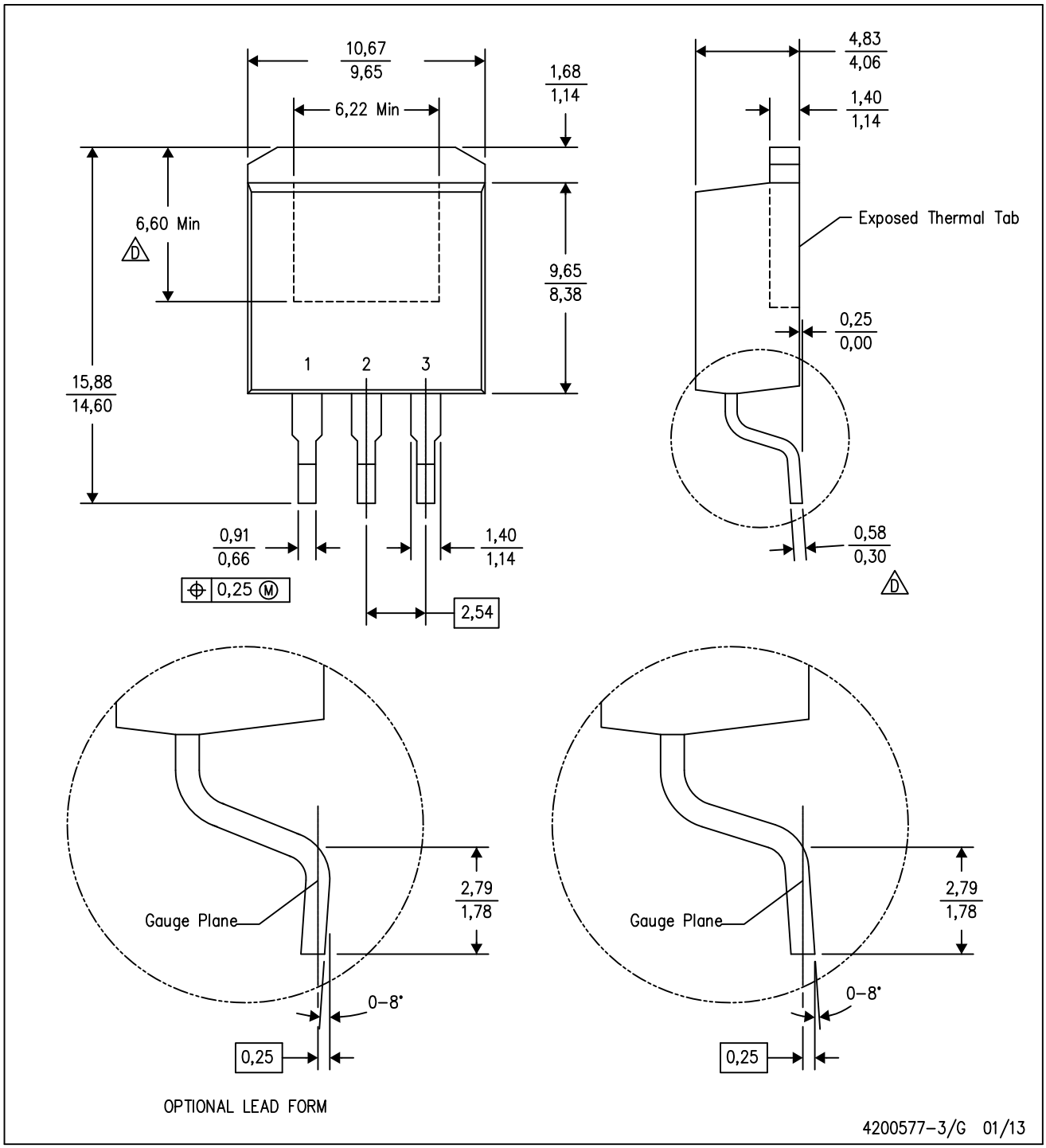

NOTES:
A. All linear dimensions are in millimeters.
B. This drawing is subject to change without notice.
C. Body dimensions do not include mold flash or protrusion. Mold flash or protrusion not to exceed 0.005 (0,13) per side.
D. Falls within JEDEC TO–263 variation AA, except minimum lead thickness and minimum exposed pad length.

KTT (R–PSFM–G3) PLASTIC FLANGE–MOUNT PACKAGE

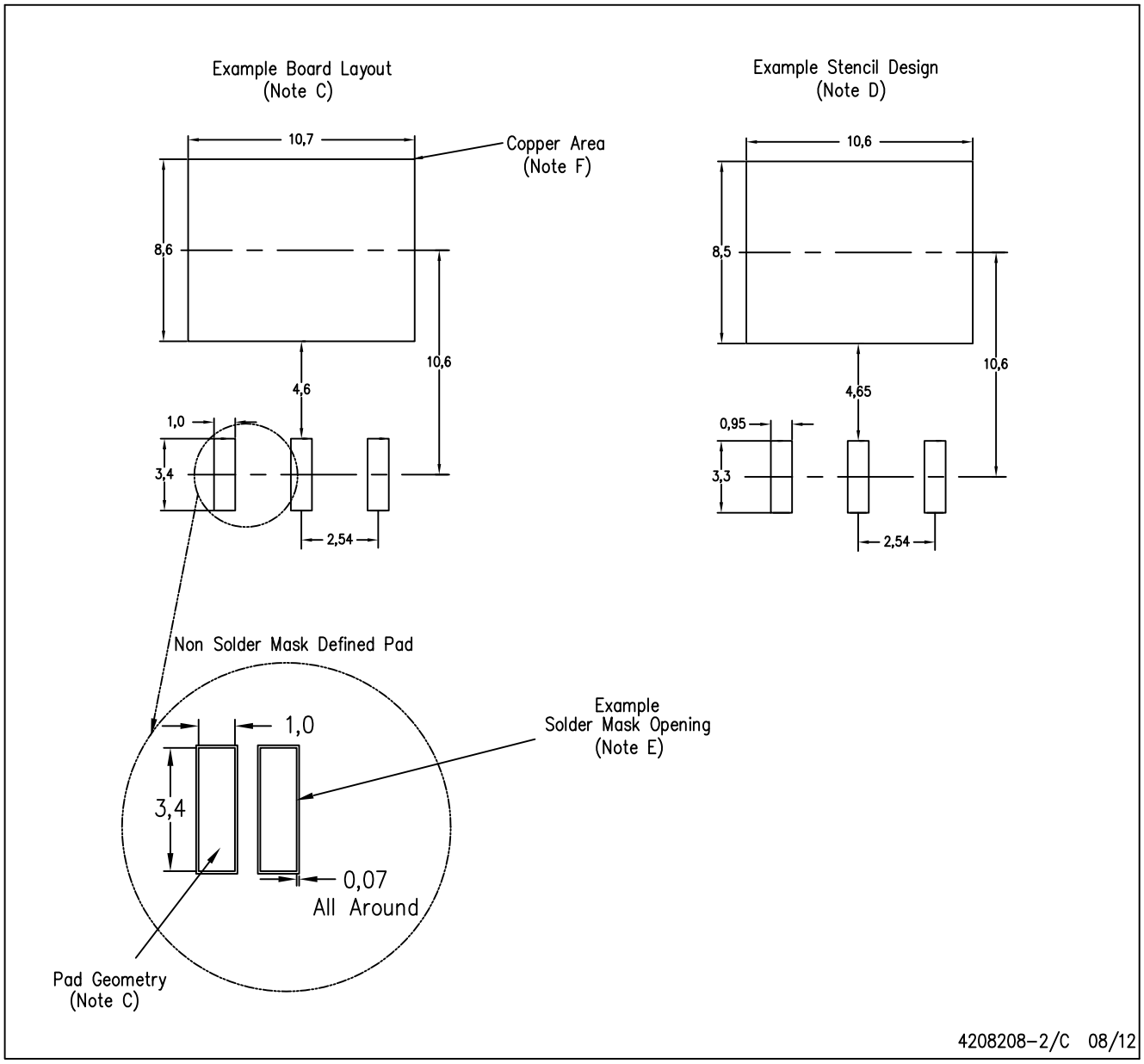

NOTES:
A. All linear dimensions are in millimeters.
B. This drawing is subject to change without notice.
C. Publication IPC–SM–782 is recommended for alternate designs.
D. Laser cutting apertures with trapezoidal walls and also rounding corners will offer better paste release. Customers should contact their board assembly site for stencil design recommendations. Refer to IPC–7525.
E. Customers should contact their board fabrication site for solder mask tolerances between and around signal pads.
F. This package is designed to be soldered to a thermal pad on the board. Refer to the Product Datasheet for specific thermal information, via requirements, and recommended thermal pad size. For thermal pad sizes larger than shown a solder mask defined pad is recommended in order to maintain the solderable pad geometry while increasing copper area.

KTT (R–PSFM–G5) PLASTIC FLANGE–MOUNT PACKAGE

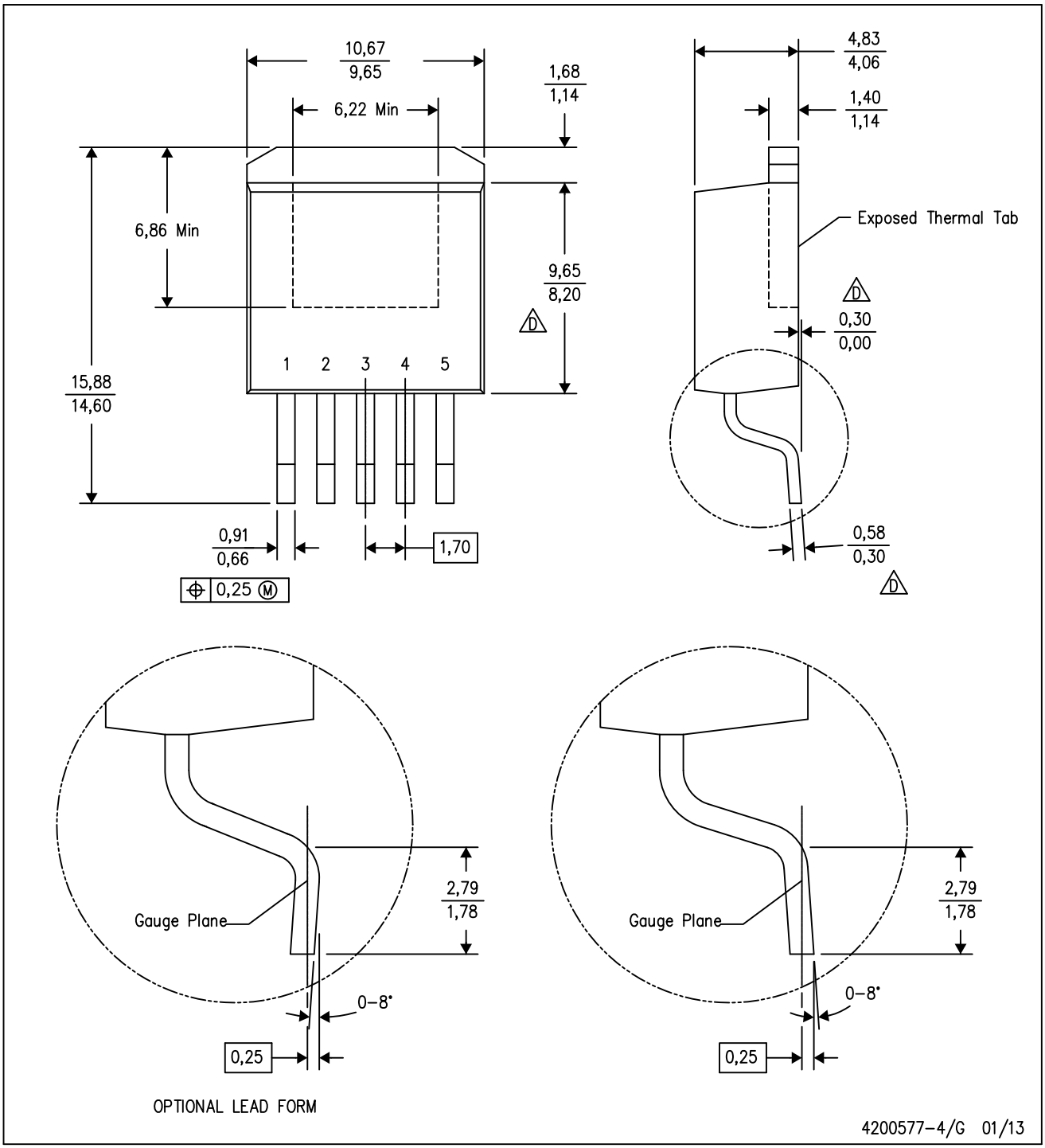

NOTES:
A. All linear dimensions are in millimeters.
B. This drawing is subject to change without notice.
C. Body dimensions do not include mold flash or protrusion. Mold flash or protrusion not to exceed 0.005 (0,13) per side.
D. Falls within JEDEC TO–263 variation BA, except minimum lead thickness, maximum seating height, and minimum body length.

KTT (R–PSFM–G5) PLASTIC FLANGE–MOUNT PACKAGE

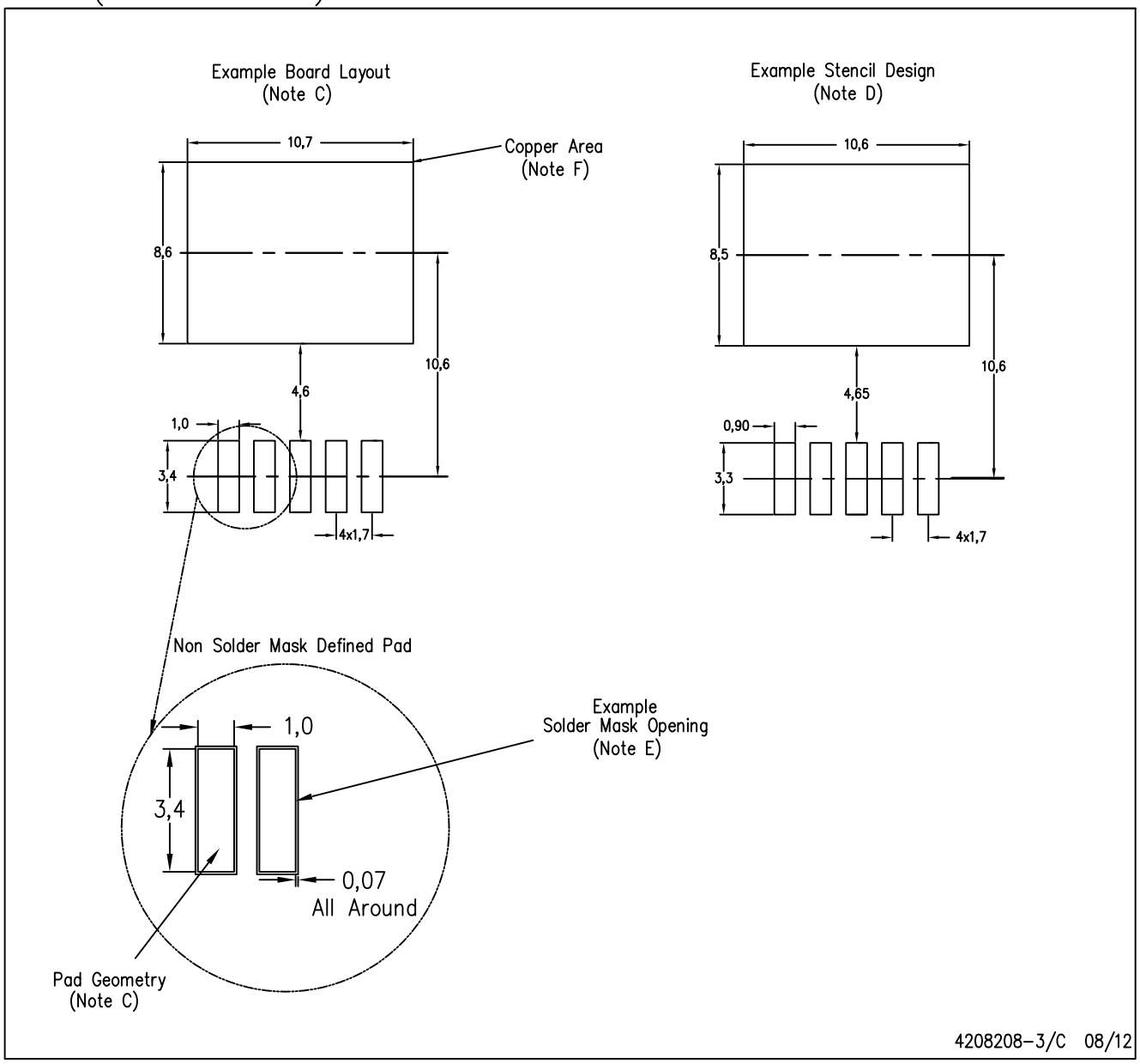

NOTES:
A. All linear dimensions are in millimeters.
B. This drawing is subject to change without notice.
C. Publication IPC–SM–782 is recommended for alternate designs.
D. Laser cutting apertures with trapezoidal walls and also rounding corners will offer better paste release. Customers should contact their board assembly site for stencil design recommendations. Refer to IPC–7525.
E. Customers should contact their board fabrication site for solder mask tolerances between and around signal pads.
F. This package is designed to be soldered to a thermal pad on the board. Refer to the Product Datasheet for specific thermal information, via requirements, and recommended thermal pad size. For thermal pad sizes larger than shown a solder mask defined pad is recommended in order to maintain the solderable pad geometry while increasing copper area.

KC (R–PSFM–T3) PLASTIC FLANGE–MOUNT PACKAGE

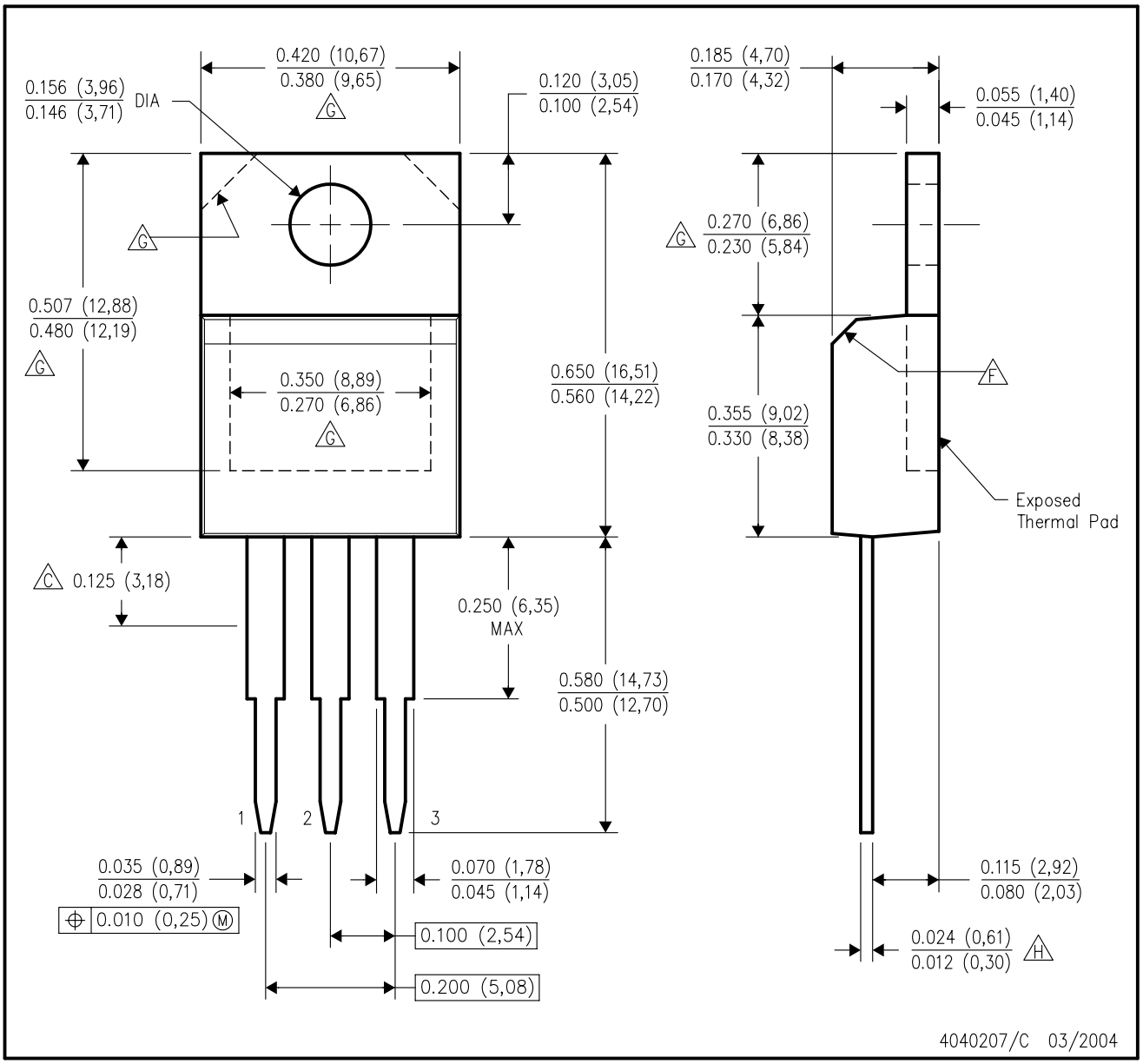

NOTES:
- A. All linear dimensions are in inches (millimeters).
- B. This drawing is subject to change without notice.
- C. Lead dimensions are not controlled within this area.
- D. All lead dimensions apply before solder dip.
- E. The center lead is in electrical contact with the mounting tab.
- F. The chamfer is optional.
- G. Thermal pad contour optional within these dimensions.
- H. Falls within JEDEC TO–220 variation AB, except minimum lead thickness.

KC (R–PSFM–T5) PLASTIC FLANGE–MOUNT PACKAGE

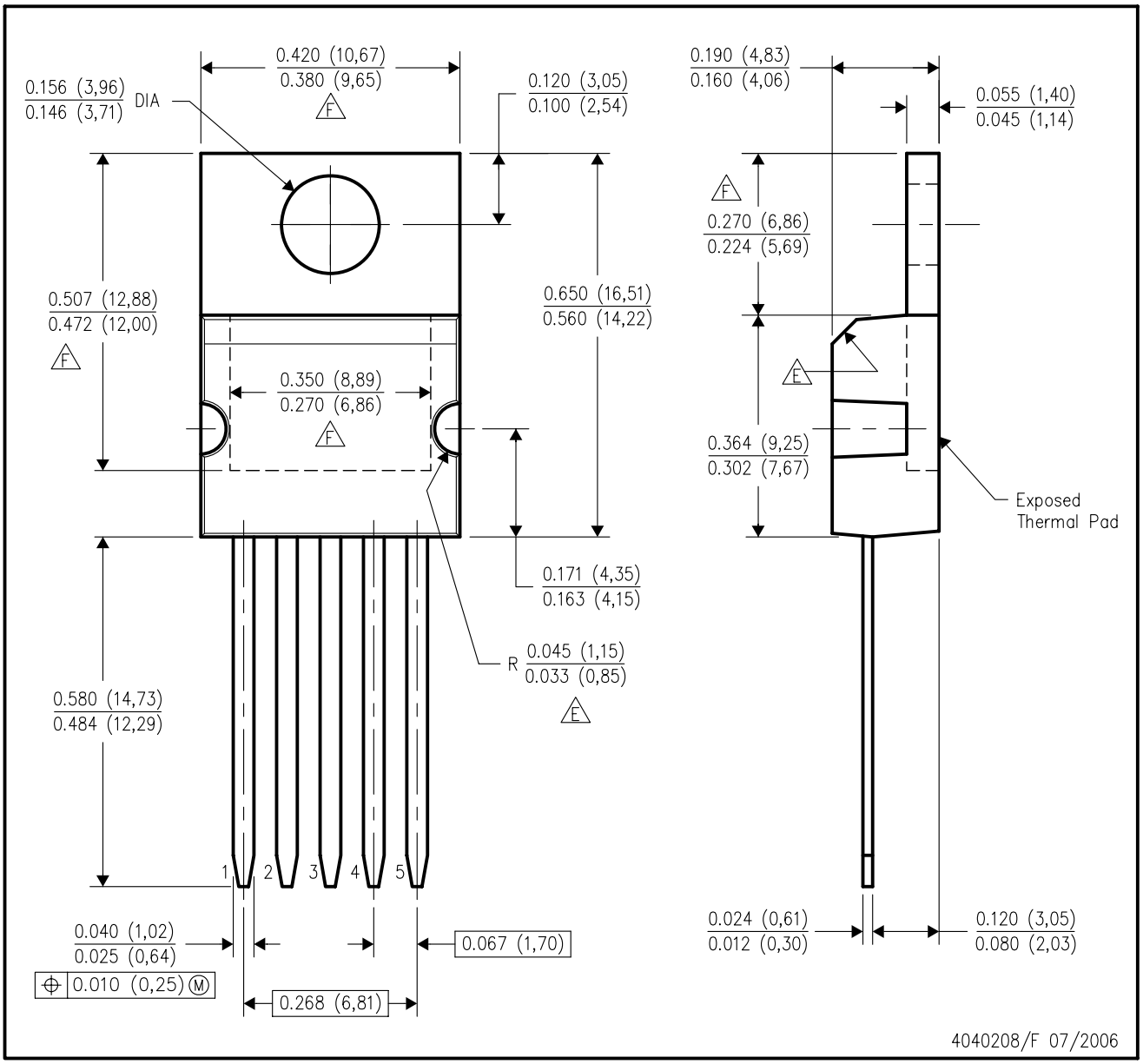

NOTES:
- A. All linear dimensions are in inches (millimeters).
- B. This drawing is subject to change without notice.
- C. All lead dimensions apply before solder dip.
- D. The center lead is in electrical contact with the mounting tab.
- E. These features are optional.
- F. Thermal pad contour optional within these dimensions.

IMPORTANT NOTICE

Texas Instruments Incorporated and its subsidiaries (TI) reserve the right to make corrections, enhancements, improvements and other changes to its semiconductor products and services per JESD46, latest issue, and to discontinue any product or service per JESD48, latest issue. Buyers should obtain the latest relevant information before placing orders and should verify that such information is current and complete. All semiconductor products (also referred to herein as “components”) are sold subject to TI’s terms and conditions of sale supplied at the time of order acknowledgment.

TI warrants performance of its components to the specifications applicable at the time of sale, in accordance with the warranty in TI’s terms and conditions of sale of semiconductor products. Testing and other quality control techniques are used to the extent TI deems necessary to support this warranty. Except where mandated by applicable law, testing of all parameters of each component is not necessarily performed.

TI assumes no liability for applications assistance or the design of Buyers’ products. Buyers are responsible for their products and applications using TI components. To minimize the risks associated with Buyers’ products and applications, Buyers should provide adequate design and operating safeguards.

TI does not warrant or represent that any license, either express or implied, is granted under any patent right, copyright, mask work right, or other intellectual property right relating to any combination, machine, or process in which TI components or services are used. Information published by TI regarding third-party products or services does not constitute a license to use such products or services or a warranty or endorsement thereof. Use of such information may require a license from a third party under the patents or other intellectual property of the third party, or a license from TI under the patents or other intellectual property of TI.

Reproduction of significant portions of TI information in TI data books or data sheets is permissible only if reproduction is without alteration and is accompanied by all associated warranties, conditions, limitations, and notices. TI is not responsible or liable for such altered documentation. Information of third parties may be subject to additional restrictions.

Resale of TI components or services with statements different from or beyond the parameters stated by TI for that component or service voids all express and any implied warranties for the associated TI component or service and is an unfair and deceptive business practice. TI is not responsible or liable for any such statements.

Buyer acknowledges and agrees that it is solely responsible for compliance with all legal, regulatory and safety-related requirements concerning its products, and any use of TI components in its applications, notwithstanding any applications-related information or support that may be provided by TI. Buyer represents and agrees that it has all the necessary expertise to create and implement safeguards which anticipate dangerous consequences of failures, monitor failures and their consequences, lessen the likelihood of failures that might cause harm and take appropriate remedial actions. Buyer will fully indemnify TI and its representatives against any damages arising out of the use of any TI components in safety-critical applications.

In some cases, TI components may be promoted specifically to facilitate safety-related applications. With such components, TI’s goal is to help enable customers to design and create their own end-product solutions that meet applicable functional safety standards and requirements. Nonetheless, such components are subject to these terms.

No TI components are authorized for use in FDA Class III (or similar life-critical medical equipment) unless authorized officers of the parties have executed a special agreement specifically governing such use.

Only those TI components which TI has specifically designated as military grade or “enhanced plastic” are designed and intended for use in military/aerospace applications or environments. Buyer acknowledges and agrees that any military or aerospace use of TI components which have ***not*** been so designated is solely at the Buyer's risk, and that Buyer is solely responsible for compliance with all legal and regulatory requirements in connection with such use.

TI has specifically designated certain components as meeting ISO/TS16949 requirements, mainly for automotive use. In any case of use of non-designated products, TI will not be responsible for any failure to meet ISO/TS16949.

Products		**Applications**	
Audio	www.ti.com/audio	Automotive and Transportation	www.ti.com/automotive
Amplifiers	amplifier.ti.com	Communications and Telecom	www.ti.com/communications
Data Converters	dataconverter.ti.com	Computers and Peripherals	www.ti.com/computers
DLP® Products	www.dlp.com	Consumer Electronics	www.ti.com/consumer-apps
DSP	dsp.ti.com	Energy and Lighting	www.ti.com/energy
Clocks and Timers	www.ti.com/clocks	Industrial	www.ti.com/industrial
Interface	interface.ti.com	Medical	www.ti.com/medical
Logic	logic.ti.com	Security	www.ti.com/security
Power Mgmt	power.ti.com	Space, Avionics and Defense	www.ti.com/space-avionics-defense
Microcontrollers	microcontroller.ti.com	Video and Imaging	www.ti.com/video
RFID	www.ti-rfid.com		
OMAP Applications Processors	www.ti.com/omap	**TI E2E Community**	e2e.ti.com
Wireless Connectivity	www.ti.com/wirelessconnectivity		

Mailing Address: Texas Instruments, Post Office Box 655303, Dallas, Texas 75265
Copyright © 2016, Texas Instruments Incorporated