LMP2231 Single Micropower, 1.6V, Precision Operational Amplifier with CMOS Inputs

Check for Samples: LMP2231

FEATURES

(For V_S = 5V, T_A = 25°C, Typical Unless Otherwise Noted)

- **Supply Current 10 µA**
- **Operating Voltage Range 1.6V to 5.5V**
- **TCV_{OS} (LMP2231A) ±0.4 µV/°C (max)**
- **TCV_{OS} (LMP2231B) ±2.5µV/°C (max)**
- **V_{OS} ±150 µV (max)**
- **Input Bias Current 20 fA**
- **PSRR 120 dB**
- **CMRR 97 dB**
- **Open Loop Gain 120 dB**
- **Gain Bandwidth Product 130 kHz**
- **Slew Rate 58 V/ms**
- **Input Voltage Noise, f = 1 kHz 60 nV/√Hz**
- **Temperature Range –40°C to 125°C**

APPLICATIONS

- **Precision Instrumentation Amplifiers**
- **Battery Powered Medical Instrumentation**
- **High Impedance Sensors**
- **Strain Gauge Bridge Amplifier**
- **Thermocouple Amplifiers**

DESCRIPTION

The LMP2231 is a single micropower precision amplifier designed for battery powered applications. The 1.6V to 5.5V operating supply voltage range and quiescent power consumption of only 16 µW extend the battery life in portable battery operated systems. The LMP2231 is part of the LMP™ precision amplifier family. The high impedance CMOS input makes it ideal for instrumentation and other sensor interface applications.

The LMP2231 has a maximum offset of 150 µV and maximum offset voltage drift of only 0.4 µV/°C along with low bias current of only ±20 fA. These precise specifications make the LMP2231 a great choice for maintaining system accuracy and long term stability.

The LMP2231 has a rail-to-rail output that swings 15 mV from the supply voltage, which increases system dynamic range. The common mode input voltage range extends 200 mV below the negative supply, thus the LMP2231 is ideal for use in single supply applications with ground sensing.

The LMP2231 is offered in 5-Pin SOT-23 and 8-pin SOIC packages.

The dual and quad versions of this product are also available. The dual, LMP2232 is offered in 8-pin SOIC and VSSOP. The quad, LMP2234 is offered in 14-pin SOIC and TSSOP.

Please be aware that an important notice concerning availability, standard warranty, and use in critical applications of Texas Instruments semiconductor products and disclaimers thereto appears at the end of this data sheet.

LMP is a trademark of Texas Instruments.
All other trademarks are the property of their respective owners.

PRODUCTION DATA information is current as of publication date. Products conform to specifications per the terms of the Texas Instruments standard warranty. Production processing does not necessarily include testing of all parameters.

Copyright © 2008–2013, Texas Instruments Incorporated

Typical Application

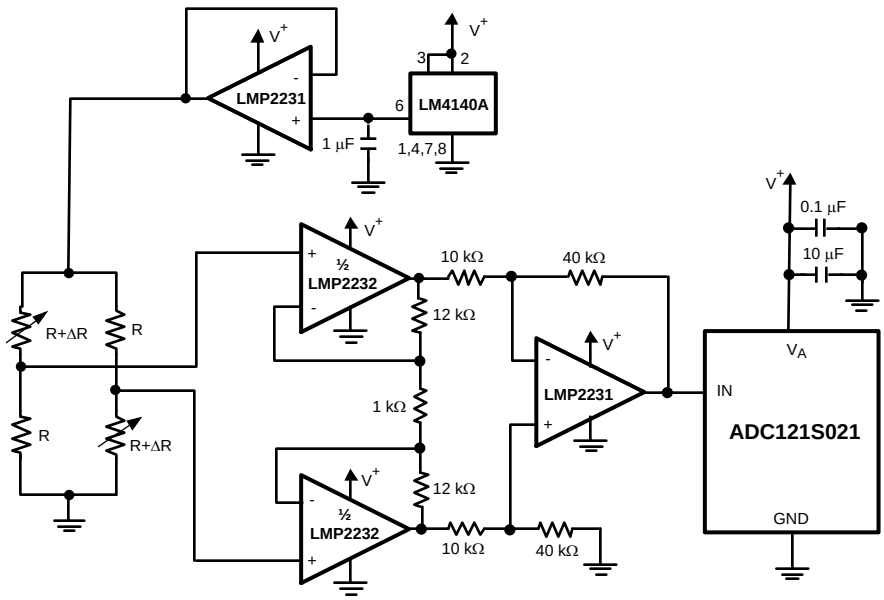

Figure 1. Strain Gauge Bridge Amplifier

These devices have limited built-in ESD protection. The leads should be shorted together or the device placed in conductive foam during storage or handling to prevent electrostatic damage to the MOS gates.

Absolute Maximum Ratings[1][2]

ESD Tolerance [3]	Human Body Model	2000V
	Machine Model	100V
Differential Input Voltage		±300 mV
Supply Voltage ($V_S = V^+ - V^-$)		6V
Voltage on Input/Output Pins		V^+ + 0.3V, V^- – 0.3V
Storage Temperature Range		−65°C to 150°C
Junction Temperature [4]		150°C
For soldering specifications: see product folder at www.ti.com and http://www.ti.com/lit/SNOA549.		

(1) Absolute Maximum Ratings indicate limits beyond which damage may occur. Operating Ratings indicate conditions for which the device is intended to be functional, but specific performance is not ensured. For ensured specifications and test conditions, see the Electrical Characteristics.
(2) If Military/Aerospace specified devices are required, please contact the TI Sales Office/ Distributors for availability and specifications.
(3) Human Body Model, applicable std. MIL-STD-883, Method 3015.7. Machine Model, applicable std. JESD22-A115-A (ESD MM std. of JEDEC)Field-Induced Charge-Device Model, applicable std. JESD22-C101-C (ESD FICDM std. of JEDEC).
(4) The maximum power dissipation is a function of $T_{J(MAX)}$, θ_{JA}. The maximum allowable power dissipation at any ambient temperature is $P_D = (T_{J(MAX)} – T_A)/ \theta_{JA}$. All numbers apply for packages soldered directly onto a PC Board.

Copyright © 2008–2013, Texas Instruments Incorporated

Operating Ratings[1]

Operating Temperature Range [2]		−40°C to 125°C
Supply Voltage ($V_S = V^+ - V^-$)		1.6V to 5.5V
Package Thermal Resistance (θ_{JA}) [2]	5-Pin SOT-23	160.6 °C/W
	8-Pin SOIC	116.2 °C/W

(1) Absolute Maximum Ratings indicate limits beyond which damage may occur. Operating Ratings indicate conditions for which the device is intended to be functional, but specific performance is not ensured. For ensured specifications and test conditions, see the Electrical Characteristics.
(2) The maximum power dissipation is a function of $T_{J(MAX)}$, θ_{JA}. The maximum allowable power dissipation at any ambient temperature is $P_D = (T_{J(MAX)} – T_A)/ \theta_{JA}$. All numbers apply for packages soldered directly onto a PC Board.

5V DC Electrical Characteristics[1]

Unless otherwise specified, all limits ensured for T_A = 25°C, V^+ = 5V, V^- = 0V, $V_{CM} = V_O = V^+/2$, and R_L > 1 MΩ. **Boldface** limits apply at the temperature extremes.

Symbol	Parameter	Conditions	Min[2]	Typ[3]	Max[2]	Units
V_{OS}	Input Offset Voltage			±10	±150 **±230**	μV
TCV_{OS}	Input Offset Voltage Drift	LMP2231A		±0.3	±0.4	μV/°C
		LMP2231B		±0.3	±2.5	
I_{BIAS}	Input Bias Current			0.02	±1 **±50**	pA
I_{OS}	Input Offset Current			5		fA
CMRR	Common Mode Rejection Ratio	$0V \le V_{CM} \le 4V$	81 **80**	97		dB
PSRR	Power Supply Rejection Ratio	$1.6V \le V^+ \le 5.5V$ $V^- = 0V$, $V_{CM} = 0V$	83 **83**	120		dB
CMVR	Common Mode Voltage Range	CMRR ≥ 80 dB CMRR ≥ 79 dB	−0.2 **−0.2**		4.2 **4.2**	V
A_{VOL}	Large Signal Voltage Gain	V_O = 0.3V to 4.7V R_L = 10 kΩ to $V^+/2$	110 **108**	120		dB
V_O	Output Swing High	R_L = 10 kΩ to $V^+/2$ V_{IN}(diff) = 100 mV		17	50 **50**	mV from either rail
	Output Swing Low	R_L = 10 kΩ to $V^+/2$ V_{IN}(diff) = −100 mV		17	50 **50**	
I_O	Output Current [4]	Sourcing, V_O to V^- V_{IN}(diff) = 100 mV	27 **19**	30		mA
		Sinking, V_O to V^+ V_{IN}(diff) = −100 mV	17 **12**	22		
I_S	Supply Current			10	16 **18**	μA

(1) Electrical Table values apply only for factory testing conditions at the temperature indicated. Factory testing conditions result in very limited self-heating of the device such that $T_J = T_A$. No ensured specification of parametric performance is indicated in the electrical tables under conditions of internal self-heating where $T_J > T_A$. Absolute Maximum Ratings indicate junction temperature limits beyond which the device may be permanently degraded, either mechanically or electrically.
(2) All limits are specified by testing, statistical analysis or design.
(3) Typical values represent the most likely parametric norm at the time of characterization. Actual typical values may vary over time and will also depend on the application and configuration. The typical values are not tested and are not ensured on shipped production material.
(4) The short circuit test is a momentary open loop test.

Copyright © 2008–2013, Texas Instruments Incorporated

5V AC Electrical Characteristics[1]

Unless otherwise specified, all limits ensured for T_A = 25°C, V^+ = 5V, V^- = 0V, V_{CM} = V_O = $V^+/2$, and R_L > 1 MΩ. **Boldface** limits apply at the temperature extremes.

Symbol	Parameter	Conditions		Min[2]	Typ[3]	Max[2]	Units
GBW	Gain-Bandwidth Product	C_L = 20 pF, R_L = 10 kΩ			130		kHz
SR	Slew Rate	A_V = +1	Falling Edge	33 **32**	58		V/ms
			Rising Edge	33 **32**	48		
θ_m	Phase Margin	C_L = 20 pF, R_L = 10 kΩ			78		deg
G_m	Gain Margin	C_L = 20 pF, R_L = 10 kΩ			27		dB
e_n	Input-Referred Voltage Noise Density	f = 1 kHz			60		nV/√Hz
	Input-Referred Voltage Noise	0.1 Hz to 10 Hz			2.3		μV_{PP}
i_n	Input-Referred Current Noise	f = 1 kHz			10		fA/√Hz
THD+N	Total Harmonic Distortion + Noise	f = 100 Hz, R_L = 10 kΩ			0.002		%

(1) Electrical Table values apply only for factory testing conditions at the temperature indicated. Factory testing conditions result in very limited self-heating of the device such that $T_J = T_A$. No ensured specification of parametric performance is indicated in the electrical tables under conditions of internal self-heating where $T_J > T_A$. Absolute Maximum Ratings indicate junction temperature limits beyond which the device may be permanently degraded, either mechanically or electrically.
(2) All limits are specified by testing, statistical analysis or design.
(3) Typical values represent the most likely parametric norm at the time of characterization. Actual typical values may vary over time and will also depend on the application and configuration. The typical values are not tested and are not ensured on shipped production material.

3.3V DC Electrical Characteristics[1]

Unless otherwise specified, all limits ensured for T_A = 25°C, V^+ = 3.3V, V^- = 0V, V_{CM} = V_O = $V^+/2$, and R_L > 1 MΩ. **Boldface** limits apply at the temperature extremes.

Symbol	Parameter	Conditions	Min[2]	Typ[3]	Max[2]	Units
V_{OS}	Input Offset Voltage			±10	±160 **±250**	μV
TCV_{OS}	Input Offset Voltage Drift	LMP2231A		±0.3	±0.4	μV/°C
		LMP2231B		±0.3	±2.5	
I_{BIAS}	Input Bias Current			0.02	±1 **±50**	pA
I_{OS}	Input Offset Current			5		fA
CMRR	Common Mode Rejection Ratio	0V ≤ V_{CM} ≤ 2.3V	79 **77**	92		dB
PSRR	Power Supply Rejection Ratio	1.6V ≤ V^+ ≤ 5.5V V^- = 0V, V_{CM} = 0V	83 **83**	120		dB
CMVR	Common Mode Voltage Range	CMRR ≥ 78 dB CMRR ≥ 77 dB	−0.2 **−0.2**		2.5 **2.5**	V
A_{VOL}	Large Signal Voltage Gain	V_O = 0.3V to 3V R_L = 10 kΩ to $V^+/2$	108 **107**	120		dB
V_O	Output Swing High	R_L = 10 kΩ to $V^+/2$ V_{IN}(diff) = 100 mV		14	50 **50**	mV from either rail
	Output Swing Low	R_L = 10 kΩ to $V^+/2$ V_{IN}(diff) = −100 mV		14	50 **50**	

(1) Electrical Table values apply only for factory testing conditions at the temperature indicated. Factory testing conditions result in very limited self-heating of the device such that $T_J = T_A$. No ensured specification of parametric performance is indicated in the electrical tables under conditions of internal self-heating where $T_J > T_A$. Absolute Maximum Ratings indicate junction temperature limits beyond which the device may be permanently degraded, either mechanically or electrically.
(2) All limits are specified by testing, statistical analysis or design.
(3) Typical values represent the most likely parametric norm at the time of characterization. Actual typical values may vary over time and will also depend on the application and configuration. The typical values are not tested and are not ensured on shipped production material.

Copyright © 2008–2013, Texas Instruments Incorporated

3.3V DC Electrical Characteristics[1] (continued)

Unless otherwise specified, all limits ensured for T_A = 25°C, V^+ = 3.3V, V^- = 0V, V_{CM} = V_O = V^+/2, and R_L > 1 MΩ. **Boldface** limits apply at the temperature extremes.

Symbol	Parameter	Conditions	Min[2]	Typ[3]	Max[2]	Units
I_O	Output Current [4]	Sourcing, V_O to V^- V_{IN}(diff) = 100 mV	11 **8**	14		mA
		Sinking, V_O to V^+ V_{IN}(diff) = −100 mV	8 **5**	11		
I_S	Supply Current			10	15 **16**	µA

(4) The short circuit test is a momentary open loop test.

3.3V AC Electrical Characteristics[1]

Unless otherwise is specified, all limits ensured for T_A = 25°C, V^+ = 3.3V, V^- = 0V, V_{CM} = V_O = V^+/2, and R_L > 1 MΩ. **Boldface** limits apply at the temperature extremes.

Symbol	Parameter	Conditions		Min[2]	Typ[3]	Max[2]	Units
GBW	Gain-Bandwidth Product	C_L = 20 pF, R_L = 10 kΩ			128		kHz
SR	Slew Rate	A_V = +1, C_L = 20 pF R_L = 10 kΩ	Falling Edge		58		V/ms
			Rising Edge		48		
θ_m	Phase Margin	C_L = 20 pF, R_L = 10 kΩ			76		deg
G_m	Gain Margin	C_L = 20 pF, R_L = 10 kΩ			26		dB
e_n	Input-Referred Voltage Noise Density	f = 1 kHz			60		nV/√Hz
	Input-Referred Voltage Noise	0.1 Hz to 10 Hz			2.4		μV_{PP}
i_n	Input-Referred Current Noise	f = 1 kHz			10		fA/√Hz
THD+N	Total Harmonic Distortion + Noise	f = 100 Hz, R_L = 10 kΩ			0.003		%

(1) Electrical Table values apply only for factory testing conditions at the temperature indicated. Factory testing conditions result in very limited self-heating of the device such that T_J = T_A. No ensured specification of parametric performance is indicated in the electrical tables under conditions of internal self-heating where T_J > T_A. Absolute Maximum Ratings indicate junction temperature limits beyond which the device may be permanently degraded, either mechanically or electrically.
(2) All limits are specified by testing, statistical analysis or design.
(3) Typical values represent the most likely parametric norm at the time of characterization. Actual typical values may vary over time and will also depend on the application and configuration. The typical values are not tested and are not ensured on shipped production material.

2.5V DC Electrical Characteristics[1]

Unless otherwise specified, all limits ensured for T_A = 25°C, V^+ = 2.5V, V^- = 0V, V_{CM} = V_O = V^+/2, and R_L > 1MΩ. **Boldface** limits apply at the temperature extremes.

Symbol	Parameter	Conditions	Min[2]	Typ[3]	Max[2]	Units
V_{OS}	Input Offset Voltage			±10	±190 **±275**	µV
TCV_{OS}	Input Offset Voltage Drift	LMP2231A		±0.3	±0.4	µV/°C
		LMP2231B		±0.3	±2.5	
I_{BIAS}	Input Bias Current			0.02	±1.0 **±50**	pA
I_{OS}	Input Offset Current			5		fA
CMRR	Common Mode Rejection Ratio	0V ≤ V_{CM} ≤ 1.5V	77 **76**	91		dB

(1) Electrical Table values apply only for factory testing conditions at the temperature indicated. Factory testing conditions result in very limited self-heating of the device such that T_J = T_A. No ensured specification of parametric performance is indicated in the electrical tables under conditions of internal self-heating where T_J > T_A. Absolute Maximum Ratings indicate junction temperature limits beyond which the device may be permanently degraded, either mechanically or electrically.
(2) All limits are specified by testing, statistical analysis or design.
(3) Typical values represent the most likely parametric norm at the time of characterization. Actual typical values may vary over time and will also depend on the application and configuration. The typical values are not tested and are not ensured on shipped production material.

Copyright © 2008–2013, Texas Instruments Incorporated

2.5V DC Electrical Characteristics[1] (continued)

Unless otherwise specified, all limits ensured for T_A = 25°C, V^+ = 2.5V, V^- = 0V, V_{CM} = V_O = V^+/2, and R_L > 1MΩ. **Boldface** limits apply at the temperature extremes.

Symbol	Parameter	Conditions	Min[2]	Typ[3]	Max[2]	Units
PSRR	Power Supply Rejection Ratio	1.6V ≤ V^+ ≤ 5.5V V^- = 0V, V_{CM} = 0V	83 **83**	120		dB
CMVR	Common Mode Voltage Range	CMRR ≥ 77 dB CMRR ≥ 76 dB	−0.2 **−0.2**		1.7 **1.7**	V
A_{VOL}	Large Signal Voltage Gain	V_O = 0.3V to 2.2V R_L = 10 kΩ to V^+/2	104 **104**	120		dB
V_O	Output Swing High	R_L = 10 kΩ to V^+/2 V_{IN}(diff) = 100 mV		12	50 **50**	mV from either rail
	Output Swing Low	R_L = 10 kΩ to V^+/2 V_{IN} (diff) = −100 mV		13	50 **50**	
I_O	Output Current [4]	Sourcing, V_O to V^- V_{IN}(diff) = 100 mV	5 **4**	8		mA
		Sinking, V_O to V^+ V_{IN}(diff) = −100 mV	3.5 **2.5**	7		
I_S	Supply Current			10	14 **15**	µA

(4) The short circuit test is a momentary open loop test.

2.5V AC Electrical Characteristics[1]

Unless otherwise specified, all limits ensured for T_A = 25°C, V^+ = 2.5V, V^- = 0V, V_{CM} = V_O = V^+/2, and R_L > 1MΩ. **Boldface** limits apply at the temperature extremes.

Symbol	Parameter	Conditions		Min[2]	Typ[3]	Max[2]	Units
GBW	Gain-Bandwidth Product	C_L = 20 pF, R_L = 10 kΩ			128		kHz
SR	Slew Rate	A_V = +1, C_L = 20 pF R_L = 10 kΩ	Falling Edge		58		V/ms
			Rising Edge		48		
θ_m	Phase Margin	C_L = 20 pF, R_L = 10 kΩ			74		deg
G_m	Gain Margin	C_L = 20 pF, R_L = 10 kΩ			26		dB
e_n	Input-Referred Voltage Noise Density	f = 1 kHz			60		nV/√Hz
	Input-Referred Voltage Noise	0.1 Hz to 10 Hz			2.5		μV_{PP}
i_n	Input-Referred Current Noise	f = 1 kHz			10		fA/√Hz
THD+N	Total Harmonic Distortion + Noise	f = 100 Hz, R_L = 10 kΩ			0.005		%

(1) Electrical Table values apply only for factory testing conditions at the temperature indicated. Factory testing conditions result in very limited self-heating of the device such that T_J = T_A. No ensured specification of parametric performance is indicated in the electrical tables under conditions of internal self-heating where T_J > T_A. Absolute Maximum Ratings indicate junction temperature limits beyond which the device may be permanently degraded, either mechanically or electrically.
(2) All limits are specified by testing, statistical analysis or design.
(3) Typical values represent the most likely parametric norm at the time of characterization. Actual typical values may vary over time and will also depend on the application and configuration. The typical values are not tested and are not ensured on shipped production material.

Copyright © 2008–2013, Texas Instruments Incorporated

1.8V DC Electrical Characteristics (1)

Unless otherwise specified, all limits ensured for T_A = 25°C, V^+ = 1.8V, V^- = 0V, V_{CM} = V_O = V^+/2, and R_L > 1 MΩ. **Boldface** limits apply at the temperature extremes.

Symbol	Parameter	Conditions	Min (2)	Typ (3)	Max (2)	Units
V_{OS}	Input Offset Voltage			±10	±230 **±325**	μV
TCV_{OS}	Input Offset Voltage Drift	LMP2231A		±0.3	±0.4	μV/°C
		LMP2231B		±0.3	±2.5	
I_{BIAS}	Input Bias Current			0.02	±1.0 **±50**	pA
I_{OS}	Input Offset Current			5		fA
CMRR	Common Mode Rejection Ratio	0V ≤ V_{CM} ≤ 0.8V	76 **75**	92		dB
PSRR	Power Supply Rejection Ratio	1.6V ≤ V^+ ≤ 5.5V V^- = 0V, V_{CM} = 0V	83 **83**	120		dB
CMVR	Common Mode Voltage Rang	CMRR ≥ 76 dB CMRR ≥ 75 dB	−0.2 **0**		1.0 **1.0**	V
A_{VOL}	Large Signal Voltage Gain	V_O = 0.3V to 1.5V R_L = 10 kΩ to V^+/2	103 **103**	120		dB
V_O	Output Swing High	R_L = 10 kΩ to V^+/2 V_{IN}(diff) = 100 mV		12	50 **50**	mV from either rail
	Output Swing Low	R_L = 10 kΩ to V^+/2 V_{IN}(diff) = −100 mV		13	50 **50**	
I_O	Output Current (4)	Sourcing, V_O to V^- V_{IN}(diff) = 100 mV	2.5 **2**	5		mA
		Sinking, V_O to V^+ V_{IN}(diff) = −100 mV	2 **1.5**	5		
I_S	Supply Current			10	14 **15**	μA

(1) Electrical Table values apply only for factory testing conditions at the temperature indicated. Factory testing conditions result in very limited self-heating of the device such that T_J = T_A. No ensured specification of parametric performance is indicated in the electrical tables under conditions of internal self-heating where T_J > T_A. Absolute Maximum Ratings indicate junction temperature limits beyond which the device may be permanently degraded, either mechanically or electrically.
(2) All limits are specified by testing, statistical analysis or design.
(3) Typical values represent the most likely parametric norm at the time of characterization. Actual typical values may vary over time and will also depend on the application and configuration. The typical values are not tested and are not ensured on shipped production material.
(4) The short circuit test is a momentary open loop test.

1.8V AC Electrical Characteristics (1)

Unless otherwise is specified, all limits ensured for T_A = 25°C, V^+ = 1.8V, V^- = 0V, V_{CM} = V_O = V^+/2, and R_L > 1 MΩ. **Boldface** limits apply at the temperature extremes.

Symbol	Parameter	Conditions		Min (2)	Typ (3)	Max (2)	Units
GBW	Gain-Bandwidth Product	C_L = 20 pF, R_L = 10 kΩ			127		kHz
SR	Slew Rate	A_V = +1, C_L = 20 pF R_L = 10 kΩ	Falling Edge		58		V/ms
			Rising Edge		48		
θ_m	Phase Margin	C_L = 20 pF, R_L = 10 kΩ			70		deg
G_m	Gain Margin	C_L = 20 pF, R_L = 10 kΩ			25		dB
e_n	Input-Referred Voltage Noise Density	f = 1 kHz			60		nV/√Hz
	Input-Referred Voltage Noise	0.1 Hz to 10 Hz			2.4		$μV_{PP}$

(1) Electrical Table values apply only for factory testing conditions at the temperature indicated. Factory testing conditions result in very limited self-heating of the device such that T_J = T_A. No ensured specification of parametric performance is indicated in the electrical tables under conditions of internal self-heating where T_J > T_A. Absolute Maximum Ratings indicate junction temperature limits beyond which the device may be permanently degraded, either mechanically or electrically.
(2) All limits are specified by testing, statistical analysis or design.
(3) Typical values represent the most likely parametric norm at the time of characterization. Actual typical values may vary over time and will also depend on the application and configuration. The typical values are not tested and are not ensured on shipped production material.

Copyright © 2008–2013, Texas Instruments Incorporated

1.8V AC Electrical Characteristics[1] (continued)

Unless otherwise is specified, all limits ensured for T_A = 25°C, V^+ = 1.8V, V^- = 0V, V_{CM} = V_O = $V^+/2$, and R_L > 1 MΩ. **Boldface** limits apply at the temperature extremes.

Symbol	Parameter	Conditions	Min[2]	Typ[3]	Max[2]	Units
i_n	Input-Referred Current Noise	f = 1 kHz		10		fA/√Hz
THD+N	Total Harmonic Distortion + Noise	f = 100 Hz, R_L = 10 kΩ		0.005		%

Connection Diagram

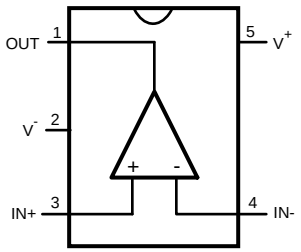

Figure 2. 5-Pin SOT-23 (Top View)
See Package Number DBV0005A

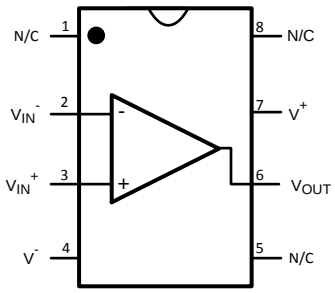

Figure 3. 8-Pin SOIC (Top View)
See Package Number D0008A

Copyright © 2008–2013, Texas Instruments Incorporated

Typical Performance Characteristics

Unless otherwise Specified: T_A = 25°C, V_S = 5V, V_{CM} = V_S/2, where V_S = V^+ - V^-

Offset Voltage Distribution

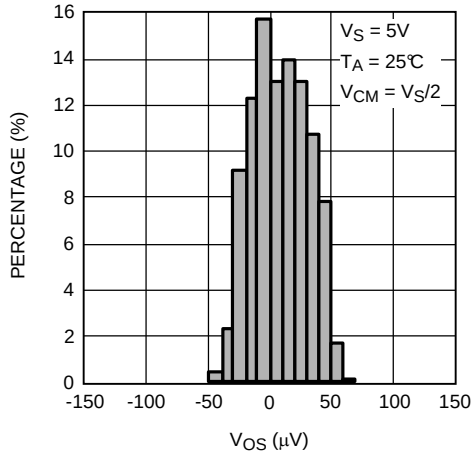

Figure 4.

TCV_{OS} Distribution

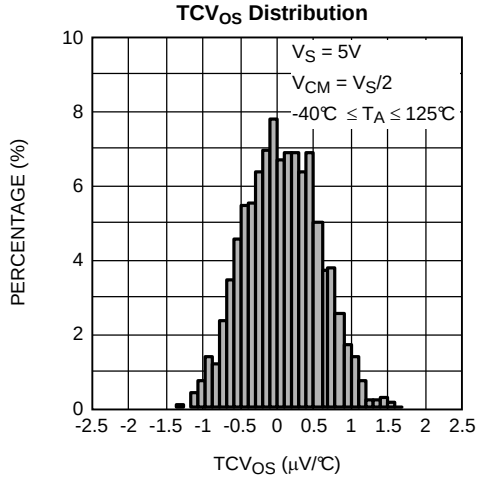

Figure 5.

Offset Voltage Distribution

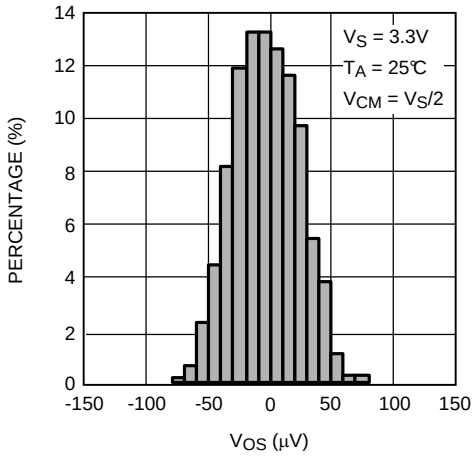

Figure 6.

TCV_{OS} Distribution

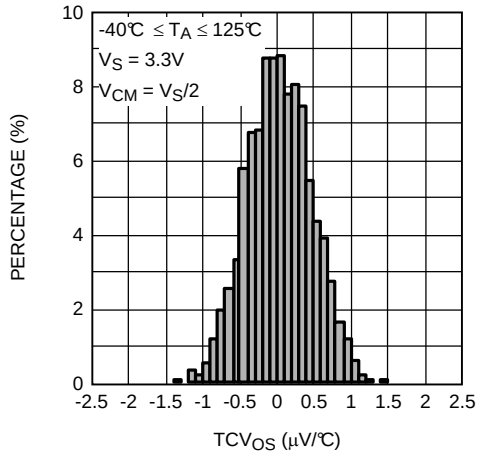

Figure 7.

Offset Voltage Distribution

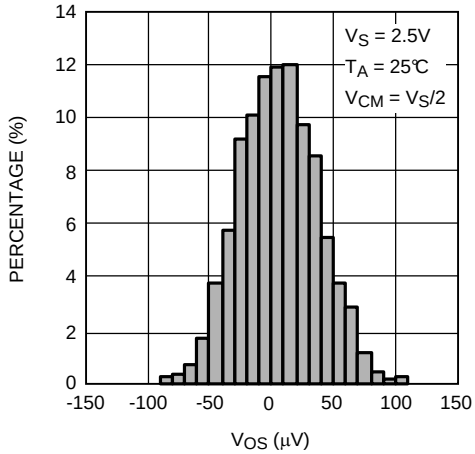

Figure 8.

TCV_{OS} Distribution

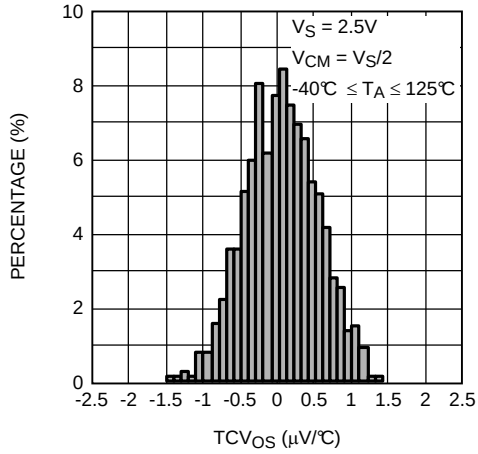

Figure 9.

Typical Performance Characteristics (continued)

Unless otherwise Specified: T_A = 25°C, V_S = 5V, V_{CM} = V_S/2, where V_S = V^+ - V^-

Offset Voltage Distribution

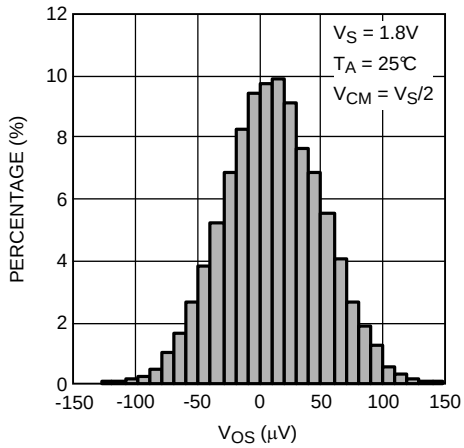

Figure 10.

TCV_{OS} Distribution

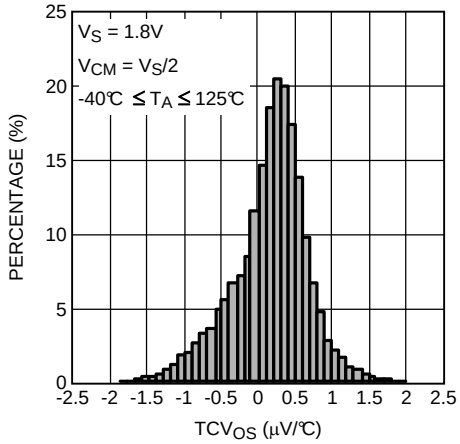

Figure 11.

Offset Voltage vs. V_{CM}

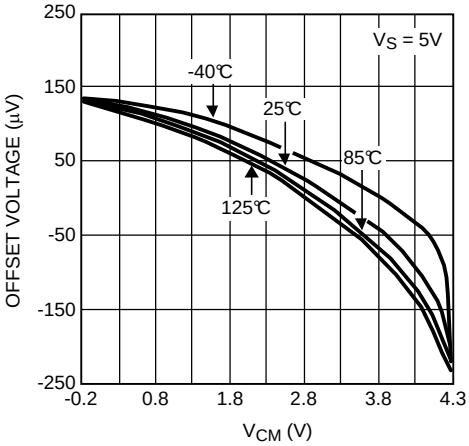

Figure 12.

Offset Voltage vs. V_{CM}

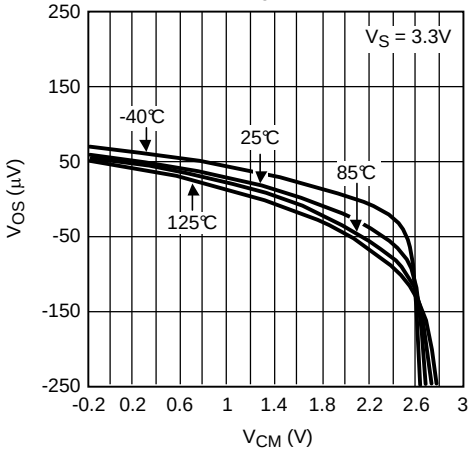

Figure 13.

Offset Voltage vs. V_{CM}

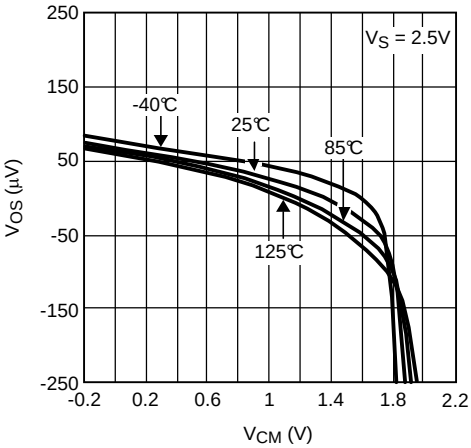

Figure 14.

Offset Voltage vs. V_{CM}

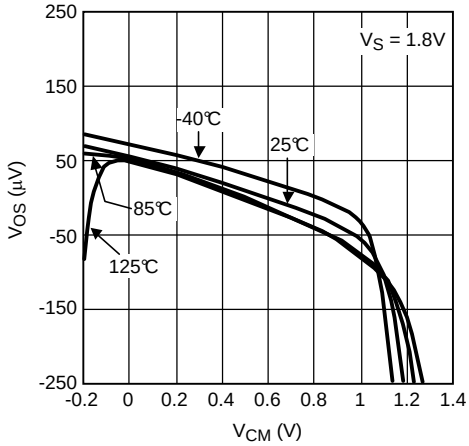

Figure 15.

Copyright © 2008–2013, Texas Instruments Incorporated

Typical Performance Characteristics (continued)

Unless otherwise Specified: T_A = 25°C, V_S = 5V, V_{CM} = V_S/2, where V_S = V^+ - V^-

Offset Voltage vs. Temperature

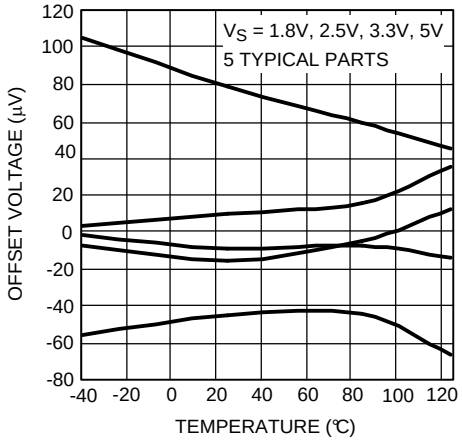

Figure 16.

Offset Voltage vs. Supply Voltage

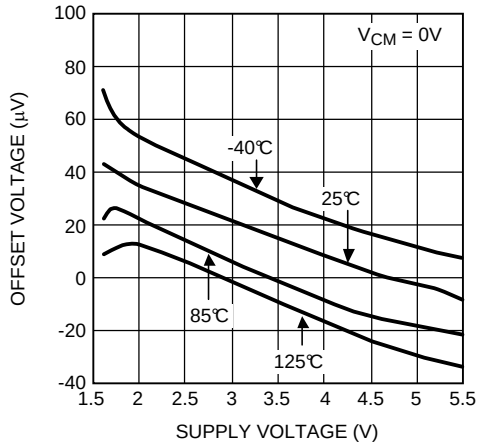

Figure 17.

Time Domain Voltage Noise

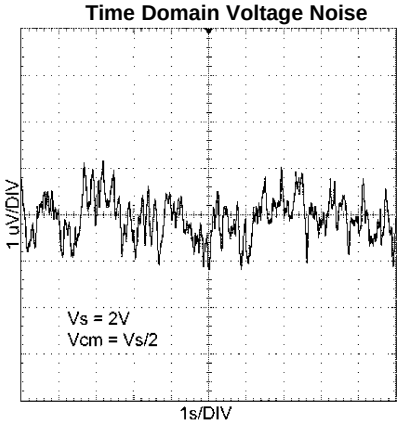

Figure 18.

Time Domain Voltage Noise

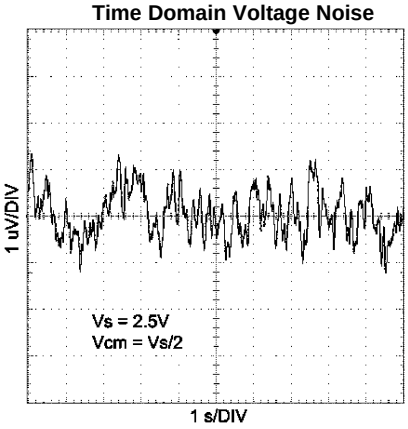

Figure 19.

Time Domain Voltage Noise

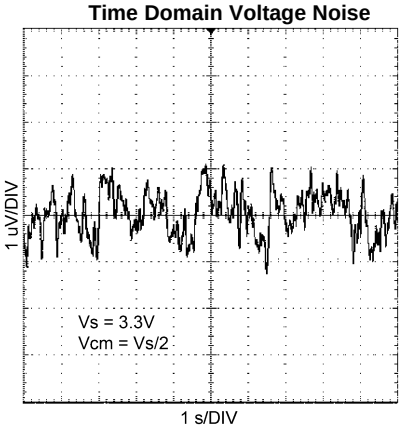

Figure 20.

Time Domain Voltage Noise

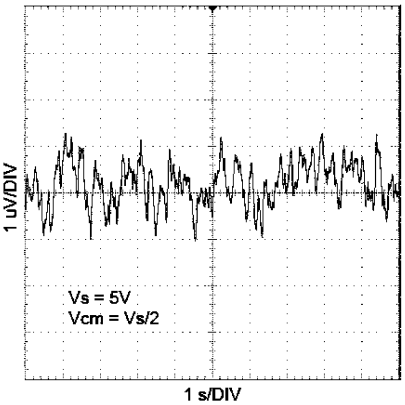

Figure 21.

Typical Performance Characteristics (continued)

Unless otherwise Specified: T_A = 25°C, V_S = 5V, V_{CM} = V_S/2, where V_S = V^+ - V^-

Input Bias Current vs. V_{CM}

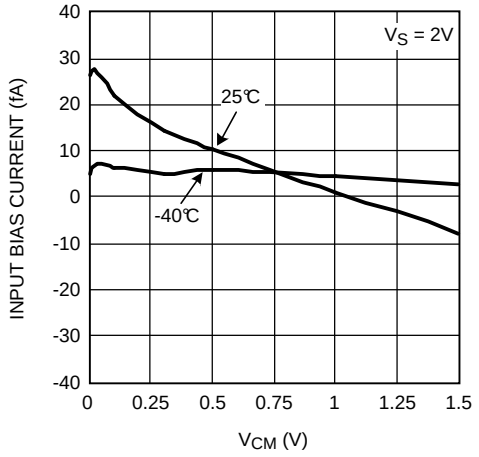

Figure 22.

Input Bias Current vs. V_{CM}

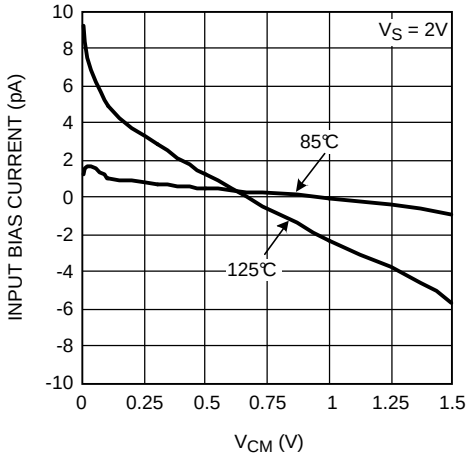

Figure 23.

Input Bias Current vs. V_{CM}

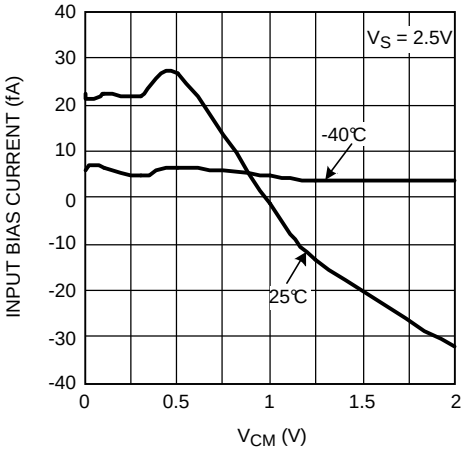

Figure 24.

Input Bias Current vs. V_{CM}

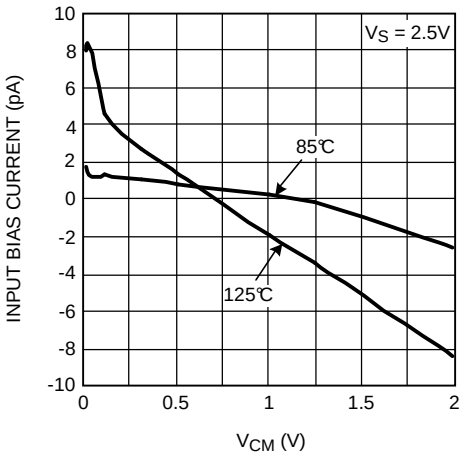

Figure 25.

Input Bias Current vs. V_{CM}

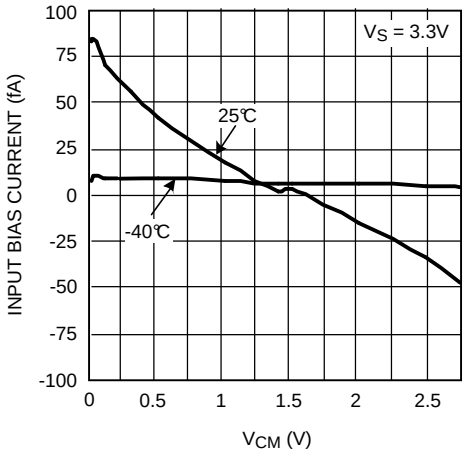

Figure 26.

Input Bias Current vs. V_{CM}

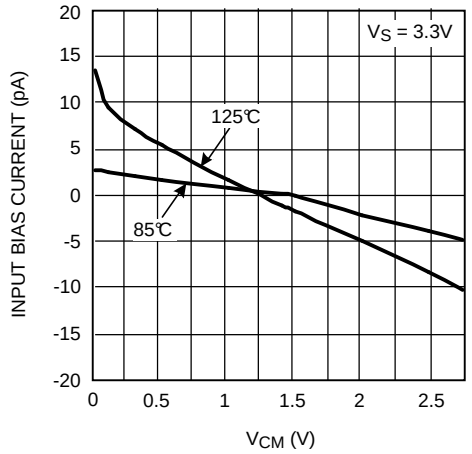

Figure 27.

Copyright © 2008–2013, Texas Instruments Incorporated

Typical Performance Characteristics (continued)

Unless otherwise Specified: T_A = 25°C, V_S = 5V, V_{CM} = V_S/2, where V_S = V^+ - V^-

Input Bias Current vs. V_{CM}

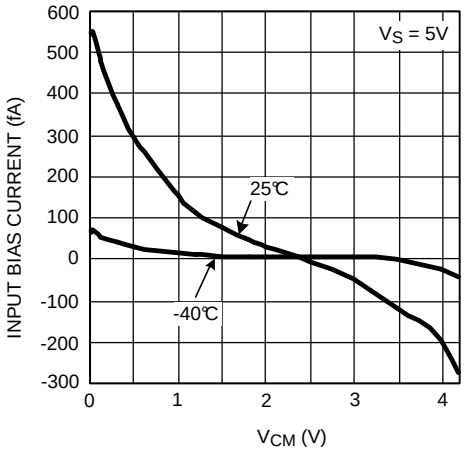

Figure 28.

Input Bias Current vs. V_{CM}

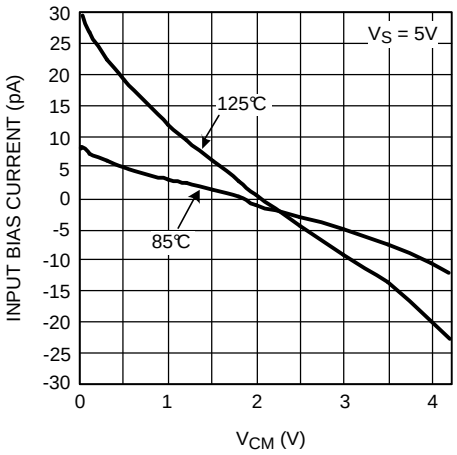

Figure 29.

PSRR vs. Frequency

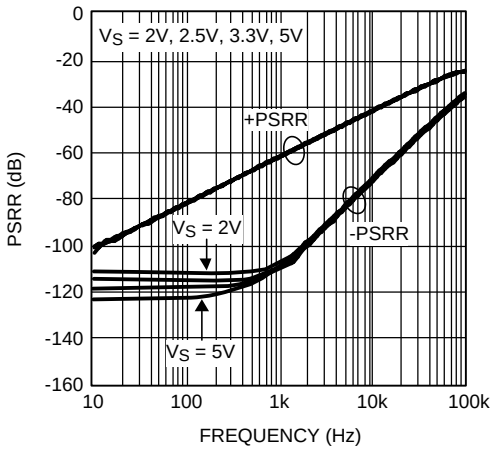

Figure 30.

Supply Current vs. Supply Voltage

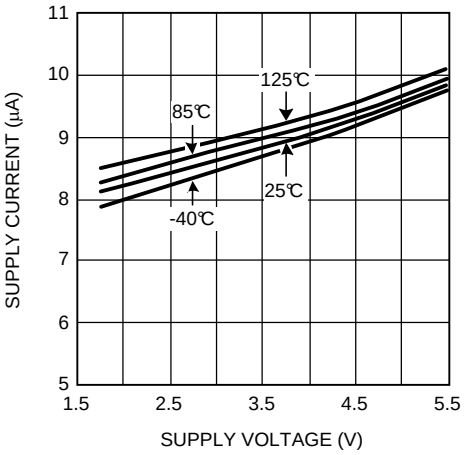

Figure 31.

Typical Performance Characteristics (continued)

Unless otherwise Specified: T_A = 25°C, V_S = 5V, V_{CM} = V_S/2, where V_S = V^+ - V^-

Sinking Current vs. Supply Voltage

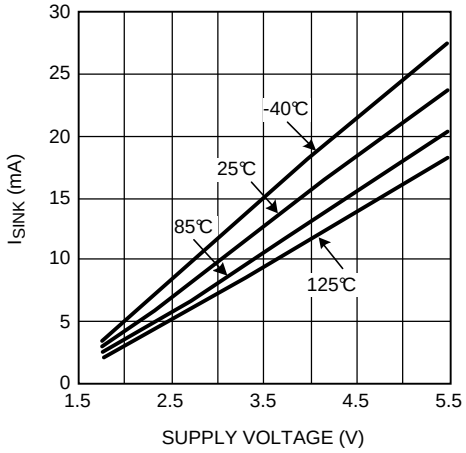

Figure 32.

Sourcing Current vs. Supply Voltage

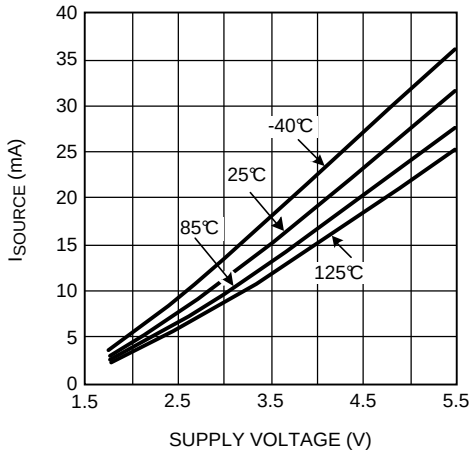

Figure 33.

Output Swing High vs. Supply Voltage

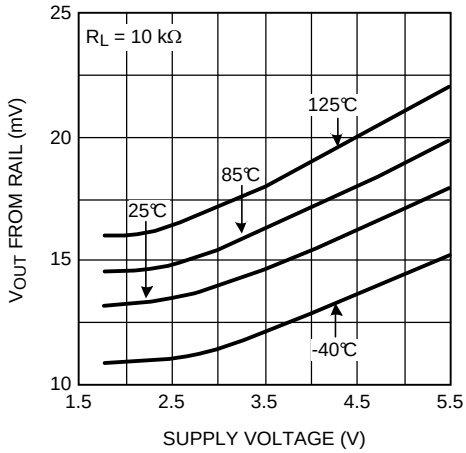

Figure 34.

Output Swing Low vs. Supply Voltage

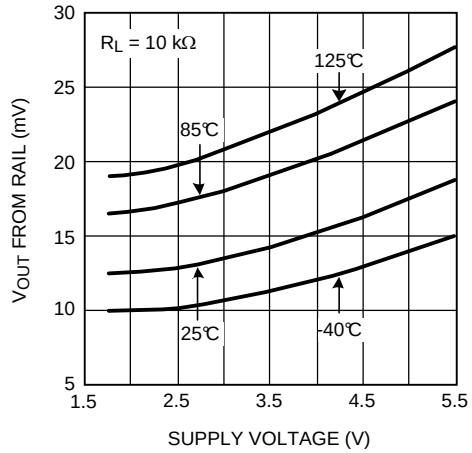

Figure 35.

Open Loop Frequency Response

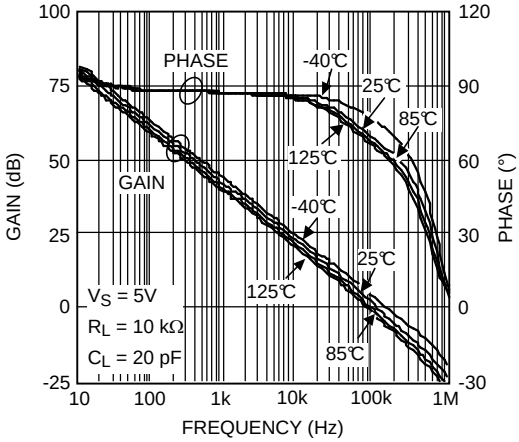

Figure 36.

Open Loop Frequency Response

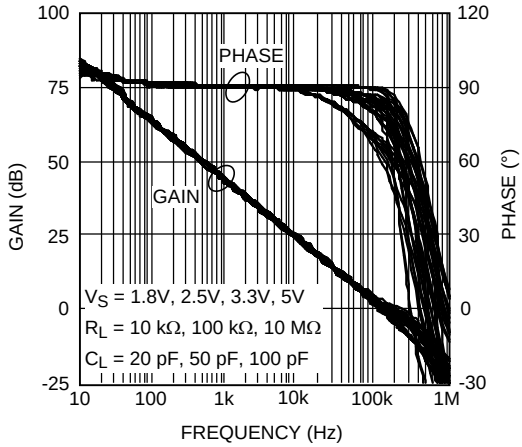

Figure 37.

Copyright © 2008–2013, Texas Instruments Incorporated

Typical Performance Characteristics (continued)

Unless otherwise Specified: T_A = 25°C, V_S = 5V, V_{CM} = V_S/2, where V_S = V^+ - V^-

Phase Margin vs. Capacitive Load

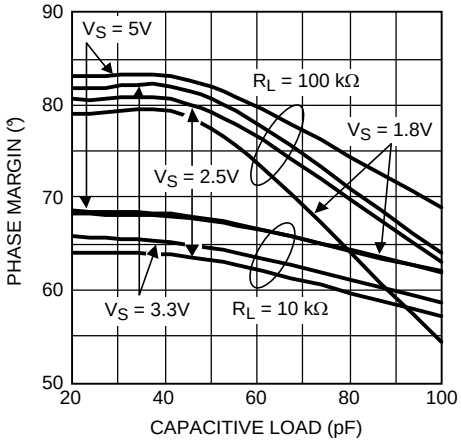

Figure 38.

Slew Rate vs. Supply Voltage

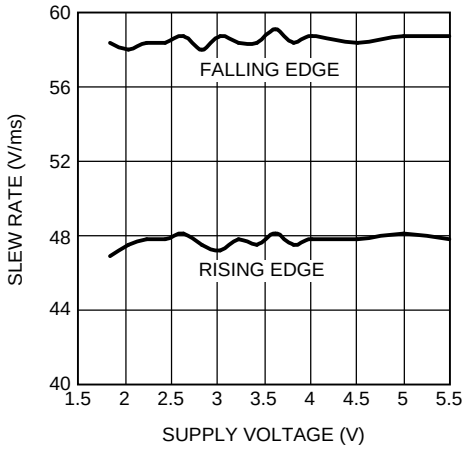

Figure 39.

THD+N vs. Amplitude

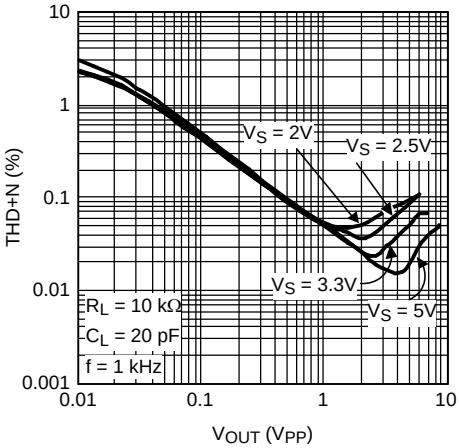

Figure 40.

THD+N vs. Frequency

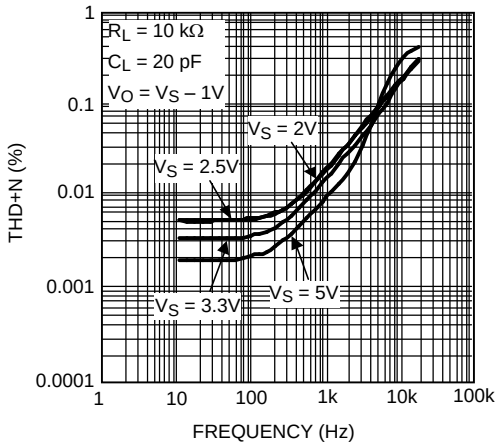

Figure 41.

Large Signal Step Response

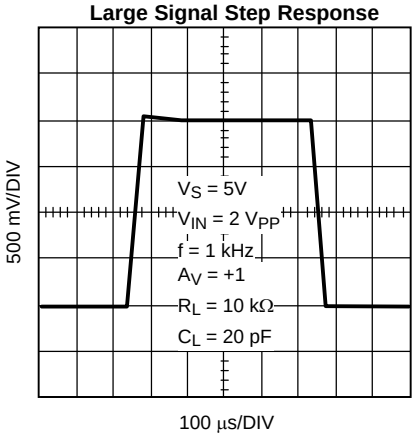

Figure 42.

Small Signal Step Response

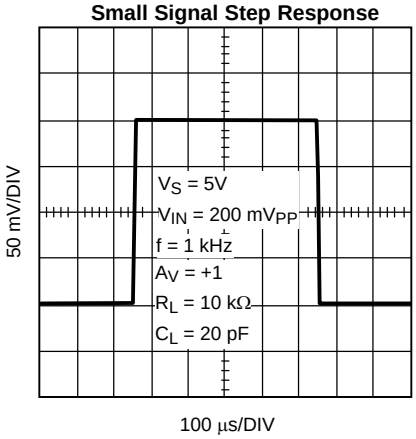

Figure 43.

Typical Performance Characteristics (continued)

Unless otherwise Specified: T_A = 25°C, V_S = 5V, V_{CM} = V_S/2, where V_S = V^+ - V^-

Large Signal Step Response

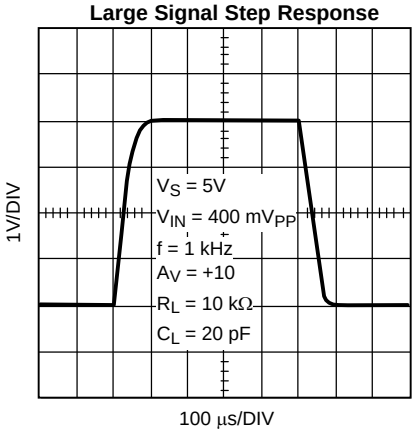

Figure 44.

Small Signal Step Response

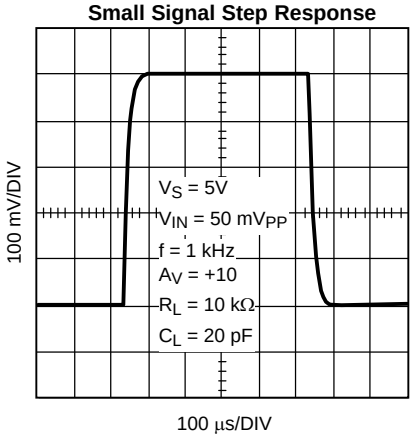

Figure 45.

CMRR vs. Frequency

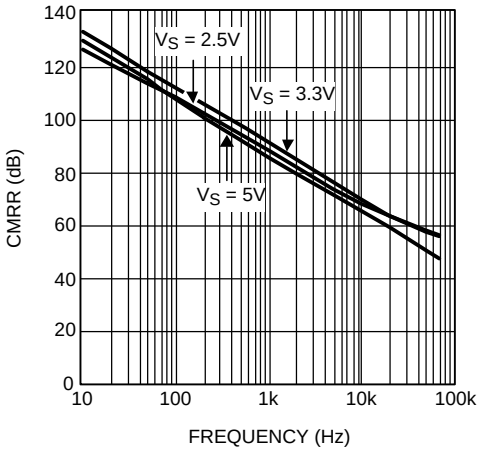

Figure 46.

Input Voltage Noise vs. Frequency

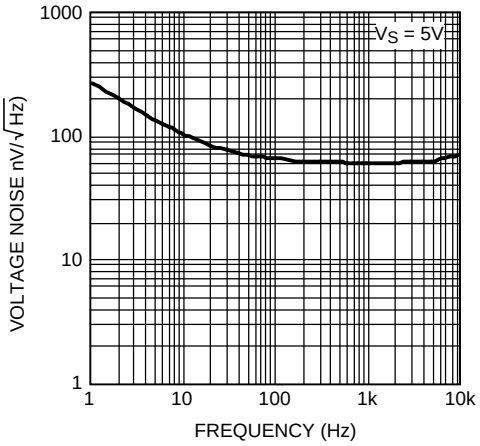

Figure 47.

Copyright © 2008–2013, Texas Instruments Incorporated

APPLICATION INFORMATION

LMP2231

The LMP2231 is a single CMOS precision amplifier that offer low offset voltage and low offset voltage drift, and high gain while only consuming 10 µA of current per channel.

The LMP2231 is a micropower op amp, consuming only 10 µA of current. Micropower op amps extend the run time of battery powered systems and reduce energy consumption in energy limited systems. The ensured supply voltage range of 1.8V to 5.0V along with the ultra-low supply current extend the battery run time in two ways. The extended ensured power supply voltage range of 1.8V to 5.0V enables the op amp to function when the battery voltage has depleted from its nominal value down to 1.8V. In addition, the lower power consumption increases the life of the battery.

The LMP2231 has an input referred offset voltage of only ±150 µV maximum at room temperature. This offset is ensured to be less than ±230 µV over temperature. This minimal offset voltage along with very low TCV_{OS} of only 0.3 µV/°C typical allows more accurate signal detection and amplification in precision applications.

The low input bias current of only ±20 fA gives the LMP2231 superiority for use in high impedance sensor applications. Bias Current of an amplifier flows through source resistance of the sensor and the voltage resulting from this current flow appears as a noise voltage on the input of the amplifier. The low input bias current enables the LMP2231 to interface with high impedance sensors while generating negligible voltage noise. Thus the LMP2231 provides better signal fidelity and a higher signal-to-noise ration when interfacing with high impedance sensors.

Texas Instruments is heavily committed to precision amplifiers and the market segment they serve. Technical support and extensive characterization data is available for sensitive applications or applications with a constrained error budget.

The operating supply voltage range of 1.8V to 5.5V over the extensive temperature range of −40°C to 125°C makes the LMP2231 an excellent choice for low voltage precision applications with extensive temperature requirements.

The LMP2231 is offered in the space saving 5-Pin SOT-23 and 8-pin SOIC package. These small packages are ideal solutions for area constrained PC boards and portable electronics.

TOTAL NOISE CONTRIBUTION

The LMP2231 has a very low input bias current, very low input current noise, and low input voltage noise for micropower amplifier. As a result, this amplifier makes a great choice for circuits with high impedance sensor applications.

Figure 48 shows the typical input noise of the LMP2231 as a function of source resistance where:

e_n denotes the input referred voltage noise

e_i is the voltage drop across source resistance due to input referred current noise or $e_i = R_S * i_n$

e_t shows the thermal noise of the source resistance

e_{ni} shows the total noise on the input.

Where:

$$e_{ni} = \sqrt{e_n^2 + e_i^2 + e_t^2}$$

The input current noise of the LMP2231 is so low that it will not become the dominant factor in the total noise unless source resistance exceeds 300 MΩ, which is an unrealistically high value. As is evident in Figure 48, at lower R_S values, total noise is dominated by the amplifier's input voltage noise. Once R_S is larger than a 100 kΩ, then the dominant noise factor becomes the thermal noise of R_S. As mentioned before, the current noise will not be the dominant noise factor for any practical application.

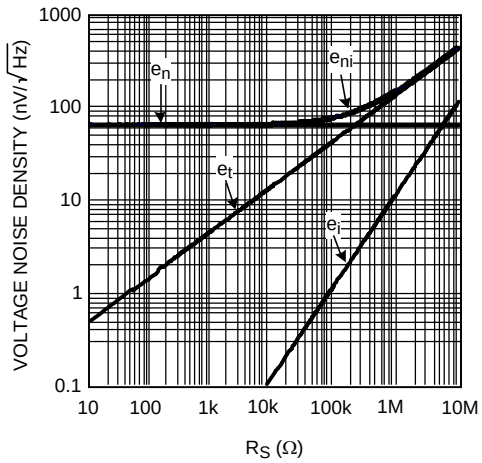

Figure 48. Total Input Noise

VOLTAGE NOISE REDUCTION

The LMP2231 has an input voltage noise of 60 nV/√Hz . While this value is very low for micropower amplifiers, this input voltage noise can be further reduced by placing N amplifiers in parallel as shown in Figure 49. The total voltage noise on the output of this circuit is divided by the square root of the number of amplifiers used in this parallel combination. This is because each individual amplifier acts as an independent noise source, and the average noise of independent sources is the quadrature sum of the independent sources divided by the number of sources. For N identical amplifiers, this means:

$$\text{REDUCED INPUT VOLTAGE NOISE} = \frac{1}{N}\sqrt{e_{n1}^2+e_{n2}^2+\cdots+e_{nN}^2}$$

$$= \frac{1}{N}\sqrt{Ne_n^2} = \frac{\sqrt{N}}{N}\ e_n$$

$$= \frac{1}{\sqrt{N}}\ e_n$$

Figure 49 shows a schematic of this input voltage noise reduction circuit. Typical resistor values are: R_G = 10Ω, R_F = 1 kΩ, and R_O = 1 kΩ.

Copyright © 2008–2013, Texas Instruments Incorporated

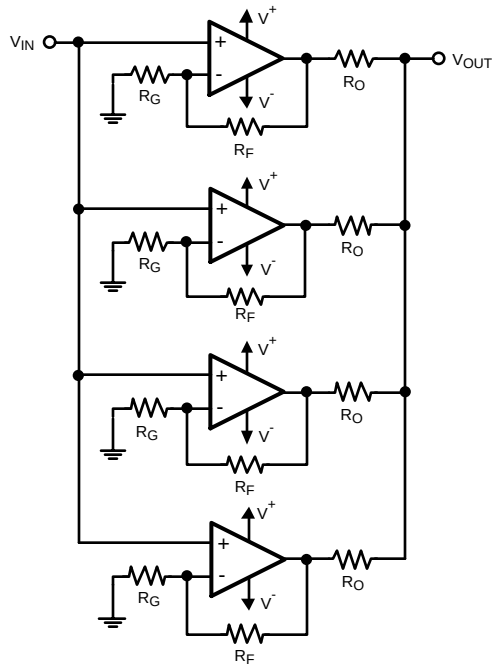

Figure 49. Noise Reduction Circuit

PRECISION INSTRUMENTATION AMPLIFIER

Measurement of very small signals with an amplifier requires close attention to the input impedance of the amplifier, gain of the overall signal on the inputs, and the gain on each input of the amplifier. This is because the difference of the input signal on the two inputs is of the interest and the common signal is considered noise. A classic circuit implementation is an instrumentation amplifier. Instrumentation amplifiers have a finite, accurate, and stable gain. They also have extremely high input impedances and very low output impedances. Finally they have an extremely high CMRR so that the amplifier can only respond to the differential signal. A typical instrumentation amplifier is shown in Figure 50.

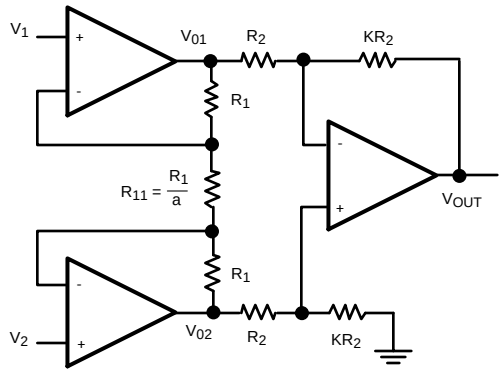

Figure 50. Instrumentation Amplifier

There are two stages in this amplifier. The last stage, output stage, is a differential amplifier. In an ideal case the two amplifiers of the first stage, input stage, would be set up as buffers to isolate the inputs. However they cannot be connected as followers because of mismatch of amplifiers. That is why there is a balancing resistor between the two. The product of the two stages of gain will give the gain of the instrumentation amplifier. Ideally, the CMRR should be infinite. However the output stage has a small non-zero common mode gain which results from resistor mismatch.

In the input stage of the circuit, current is the same across all resistors. This is due to the high input impedance and low input bias current of the LMP2231.

$$\text{GIVEN: } I_{R_1} = I_{R_{11}} \tag{1}$$

By Ohm's Law:

$$V_{O1} - V_{O2} = (2R_1 + R_{11})\, I_{R_{11}}$$

$$= (2a + 1)\ R_{11} \bullet I_{R_{11}}$$

$$= (2a + 1)\, V_{R_{11}} \tag{2}$$

However:

$$V_{R_{11}} = V_1 - V_2 \tag{3}$$

So we have:

$$V_{O1} – V_{O2} = (2a+1)(V_1 – V_2) \tag{4}$$

Now looking at the output of the instrumentation amplifier:

$$V_O = \frac{KR_2}{R_2}\ (V_{O2} - V_{O1})$$

$$= -K\,(V_{O1} - V_{O2}) \tag{5}$$

Substituting from Equation 4:

$$V_O = -K\,(2a + 1)\,(V_1 - V_2) \tag{6}$$

This shows the gain of the instrumentation amplifier to be:

$$-K(2a+1) \tag{7}$$

Typical values for this circuit can be obtained by setting: a = 12 and K= 4. This results in an overall gain of −100.

SINGLE SUPPLY STRAIN GAGE BRIDGE AMPLIFIER

Strain gauges are popular electrical elements used to measure force or pressure. Strain gauges are subjected to an unknown force which is measured as a the deflection on a previously calibrated scale. Pressure is often measured using the same technique; however this pressure needs to be converted into force using an appropriate transducer. Strain gauges are often resistors which are sensitive to pressure or to flexing. Sense resistor values range from tens of ohms to several hundred kilo ohms. The resistance change which is a result of applied force across the strain gauge might be 1% of its total value. An accurate and reliable system is needed to measure this small resistance change. Bridge configurations offer a reliable method for this measurement.

Bridge sensors are formed of four resistors, connected as a quadrilateral. A voltage source or a current source is used across one of the diagonals to excite the bridge while a voltage detector across the other diagonal measures the output voltage.

Bridges are mainly used as null circuits or to measure a differential voltages. Bridges will have no output voltage if the ratios of two adjacent resistor values are equal. This fact is used in null circuit measurements. These are particularly used in feedback systems which involve electrochemical elements or human interfaces. Null systems force an active resistor, such as a strain gauge, to balance the bridge by influencing the measured parameter.

Often in sensor applications at lease one of the resistors is a variable resistor, or a sensor. The deviation of this active element from its initial value is measured as an indication of change in the measured quantity. A change in output voltage represents the sensor value change. Since the sensor value change is often very small, the resulting output voltage is very small in magnitude as well. This requires an extensive and very precise amplification circuitry so that signal fidelity does not change after amplification.

Sensitivity of a bridge is the ratio of its maximum expected output change to the excitation voltage change.

 Copyright © 2008–2013, Texas Instruments Incorporated

Figure 51 (a) shows a typical bridge sensor and Figure 51(b) shows the bridge with four sensors. R in Figure 51(b) is the nominal value of the sense resistor and the deviations from R are proportional to the quantity being measured.

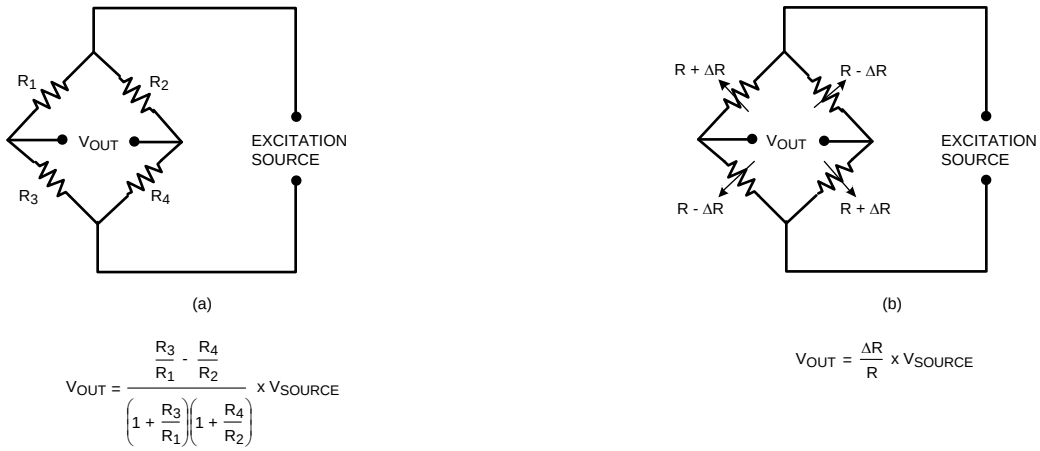

$$V_{OUT} = \frac{\frac{R_3}{R_1} - \frac{R_4}{R_2}}{\left(1 + \frac{R_3}{R_1}\right)\left(1 + \frac{R_4}{R_2}\right)} \times V_{SOURCE}$$

$$V_{OUT} = \frac{\Delta R}{R} \times V_{SOURCE}$$

Figure 51. Bridge Sensor

Instrumentation amplifiers are great for interfacing with bridge sensors. Bridge sensors often sense a very small differential signal in the presence of a larger common mode voltage. Instrumentation amplifiers reject this common mode signal.

Figure 52 shows a strain gauge bridge amplifier. In this application the LMP2231 is used to buffer the LM4140's precision output voltage. The LM4140A is a precision voltage reference. The other three LMP2231s are used to form an instrumentation amplifier. This instrumentation amplifier uses the LMP2231's high CMRR and low V_{OS} and TCV_{OS} to accurately amplify the small differential signal generated by the output of the bridge sensor. This amplified signal is then fed into the ADC121S021 which is a 12-bit analog to digital converter. This circuit works on a single supply voltage of 5V.

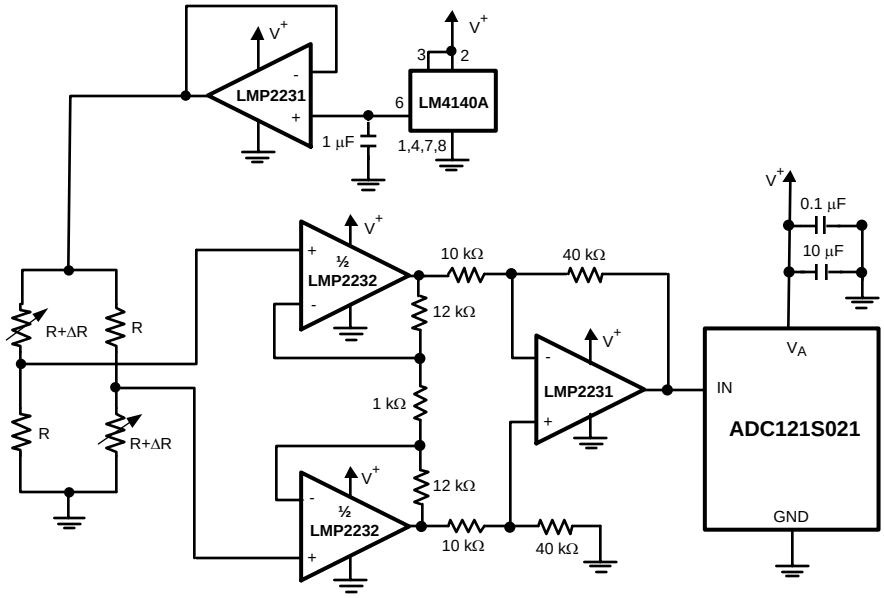

Figure 52. Strain Gauge Bridge Amplifier

PORTABLE GAS DETECTION SENSOR

Gas sensors are used in many different industrial and medical applications. They generate a current which is proportional to the percentage of a particular gas sensed in an air sample. This current goes through a load resistor and the resulting voltage drop is measured. Depending on the sensed gas and sensitivity of the sensor, the output current can be in the order of tens of microamperes to a few milliamperes. Gas sensor datasheets often specify a recommended load resistor value or they suggest a range of load resistors to choose from.

Oxygen sensors are used when air quality or oxygen delivered to a patient needs to be monitored. Fresh air contains 20.9% oxygen. Air samples containing less than 18% oxygen are considered dangerous. Oxygen sensors are also used in industrial applications where the environment must lack oxygen. An example is when food is vacuum packed. There are two main categories of oxygen sensors, those which sense oxygen when it is abundantly present (i.e. in air or near an oxygen tank) and those which detect traces of oxygen in ppm.

Figure 53 shows a typical circuit used to amplify the output of an oxygen detector. The LMP2231 makes an excellent choice for this application as it only draws 10 µA of current and operates on supply voltages down to 1.8V. This application detects oxygen in air. The oxygen sensor outputs a known current through the load resistor. This value changes with the amount of oxygen present in the air sample. Oxygen sensors usually recommend a particular load resistor value or specify a range of acceptable values for the load resistor. Oxygen sensors typically have a life of one to two years. The use of the micropower LMP2231 means minimal power usage by the op amp and it enhances the battery life. Depending on other components present in the circuit design, the battery could last for the entire life of the oxygen sensor. The precision specifications of the LMP2231, such as its very low offset voltage, low TCV_{OS} , low input bias current, low CMRR, and low PSRR are other factors which make the LMP2231 a great choice for this application.

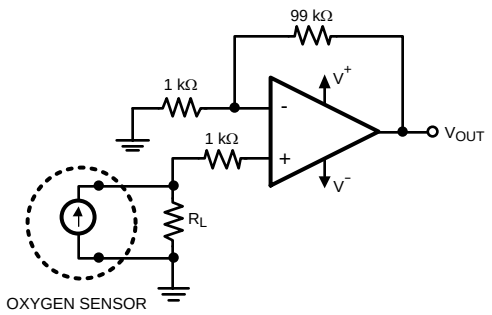

Figure 53. Precision Oxygen Sensor

Copyright © 2008–2013, Texas Instruments Incorporated

REVISION HISTORY

Changes from Revision D (March 2013) to Revision E	Page
• Changed layout of National Data Sheet to TI format	22

PACKAGING INFORMATION

Orderable Device	Status (1)	Package Type	Package Drawing	Pins	Package Qty	Eco Plan (2)	Lead/Ball Finish	MSL Peak Temp (3)	Op Temp (°C)	Top-Side Markings (4)	Samples
LMP2231AMA/NOPB	ACTIVE	SOIC	D	8	95	Green (RoHS & no Sb/Br)	CU SN	Level-1-260C-UNLIM	-40 to 125	LMP22 31AMA	Samples
LMP2231AMAE/NOPB	ACTIVE	SOIC	D	8	250	Green (RoHS & no Sb/Br)	CU SN	Level-1-260C-UNLIM	-40 to 125	LMP22 31AMA	Samples
LMP2231AMAX/NOPB	ACTIVE	SOIC	D	8	2500	Green (RoHS & no Sb/Br)	CU SN	Level-1-260C-UNLIM	-40 to 125	LMP22 31AMA	Samples
LMP2231AMF/NOPB	ACTIVE	SOT-23	DBV	5	1000	Green (RoHS & no Sb/Br)	CU SN	Level-1-260C-UNLIM	-40 to 125	AL5A	Samples
LMP2231AMFE/NOPB	ACTIVE	SOT-23	DBV	5	250	Green (RoHS & no Sb/Br)	CU SN	Level-1-260C-UNLIM	-40 to 125	AL5A	Samples
LMP2231AMFX/NOPB	ACTIVE	SOT-23	DBV	5	3000	Green (RoHS & no Sb/Br)	CU SN	Level-1-260C-UNLIM	-40 to 125	AL5A	Samples
LMP2231BMA/NOPB	ACTIVE	SOIC	D	8	95	Green (RoHS & no Sb/Br)	CU SN	Level-1-260C-UNLIM	-40 to 125	LMP22 31BMA	Samples
LMP2231BMAE/NOPB	ACTIVE	SOIC	D	8	250	Green (RoHS & no Sb/Br)	CU SN	Level-1-260C-UNLIM	-40 to 125	LMP22 31BMA	Samples
LMP2231BMAX/NOPB	ACTIVE	SOIC	D	8	2500	Green (RoHS & no Sb/Br)	CU SN	Level-1-260C-UNLIM	-40 to 125	LMP22 31BMA	Samples
LMP2231BMF/NOPB	ACTIVE	SOT-23	DBV	5	1000	Green (RoHS & no Sb/Br)	CU SN	Level-1-260C-UNLIM	-40 to 125	AL5B	Samples
LMP2231BMFE/NOPB	ACTIVE	SOT-23	DBV	5	250	Green (RoHS & no Sb/Br)	CU SN	Level-1-260C-UNLIM	-40 to 125	AL5B	Samples
LMP2231BMFX/NOPB	ACTIVE	SOT-23	DBV	5	3000	Green (RoHS & no Sb/Br)	CU SN	Level-1-260C-UNLIM	-40 to 125	AL5B	Samples

(1) The marketing status values are defined as follows:
ACTIVE: Product device recommended for new designs.
LIFEBUY: TI has announced that the device will be discontinued, and a lifetime-buy period is in effect.
NRND: Not recommended for new designs. Device is in production to support existing customers, but TI does not recommend using this part in a new design.
PREVIEW: Device has been announced but is not in production. Samples may or may not be available.
OBSOLETE: TI has discontinued the production of the device.

(2) Eco Plan - The planned eco-friendly classification: Pb-Free (RoHS), Pb-Free (RoHS Exempt), or Green (RoHS & no Sb/Br) - please check http://www.ti.com/productcontent for the latest availability information and additional product content details.
TBD: The Pb-Free/Green conversion plan has not been defined.

Pb-Free (RoHS): TI's terms "Lead-Free" or "Pb-Free" mean semiconductor products that are compatible with the current RoHS requirements for all 6 substances, including the requirement that lead not exceed 0.1% by weight in homogeneous materials. Where designed to be soldered at high temperatures, TI Pb-Free products are suitable for use in specified lead-free processes.
Pb-Free (RoHS Exempt): This component has a RoHS exemption for either 1) lead-based flip-chip solder bumps used between the die and package, or 2) lead-based die adhesive used between the die and leadframe. The component is otherwise considered Pb-Free (RoHS compatible) as defined above.
Green (RoHS & no Sb/Br): TI defines "Green" to mean Pb-Free (RoHS compatible), and free of Bromine (Br) and Antimony (Sb) based flame retardants (Br or Sb do not exceed 0.1% by weight in homogeneous material)

(3) MSL, Peak Temp. -- The Moisture Sensitivity Level rating according to the JEDEC industry standard classifications, and peak solder temperature.

(4) Multiple Top-Side Markings will be inside parentheses. Only one Top-Side Marking contained in parentheses and separated by a "~" will appear on a device. If a line is indented then it is a continuation of the previous line and the two combined represent the entire Top-Side Marking for that device.

Important Information and Disclaimer: The information provided on this page represents TI's knowledge and belief as of the date that it is provided. TI bases its knowledge and belief on information provided by third parties, and makes no representation or warranty as to the accuracy of such information. Efforts are underway to better integrate information from third parties. TI has taken and continues to take reasonable steps to provide representative and accurate information but may not have conducted destructive testing or chemical analysis on incoming materials and chemicals. TI and TI suppliers consider certain information to be proprietary, and thus CAS numbers and other limited information may not be available for release.

In no event shall TI's liability arising out of such information exceed the total purchase price of the TI part(s) at issue in this document sold by TI to Customer on an annual basis.

TAPE AND REEL INFORMATION

REEL DIMENSIONS

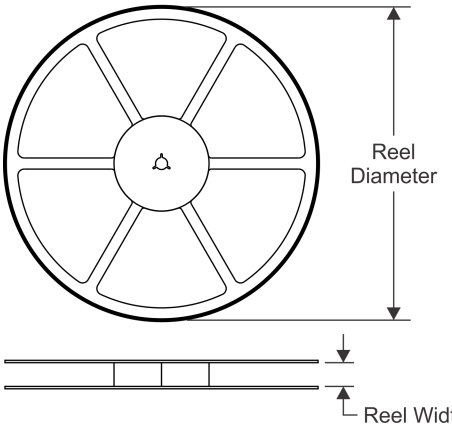

TAPE DIMENSIONS

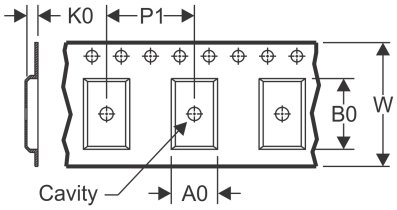

A0	Dimension designed to accommodate the component width
B0	Dimension designed to accommodate the component length
K0	Dimension designed to accommodate the component thickness
W	Overall width of the carrier tape
P1	Pitch between successive cavity centers

QUADRANT ASSIGNMENTS FOR PIN 1 ORIENTATION IN TAPE

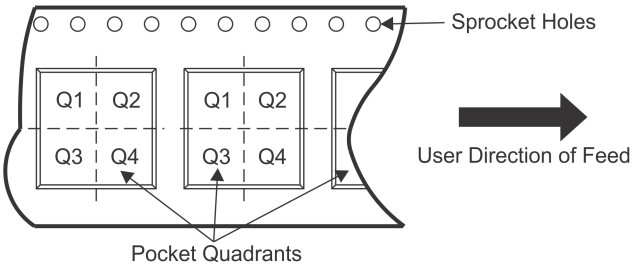

*All dimensions are nominal

Device	Package Type	Package Drawing	Pins	SPQ	Reel Diameter (mm)	Reel Width W1 (mm)	A0 (mm)	B0 (mm)	K0 (mm)	P1 (mm)	W (mm)	Pin1 Quadrant
LMP2231AMAE/NOPB	SOIC	D	8	250	178.0	12.4	6.5	5.4	2.0	8.0	12.0	Q1
LMP2231AMAX/NOPB	SOIC	D	8	2500	330.0	12.4	6.5	5.4	2.0	8.0	12.0	Q1
LMP2231BMAE/NOPB	SOIC	D	8	250	178.0	12.4	6.5	5.4	2.0	8.0	12.0	Q1
LMP2231BMAX/NOPB	SOIC	D	8	2500	330.0	12.4	6.5	5.4	2.0	8.0	12.0	Q1

TAPE AND REEL BOX DIMENSIONS

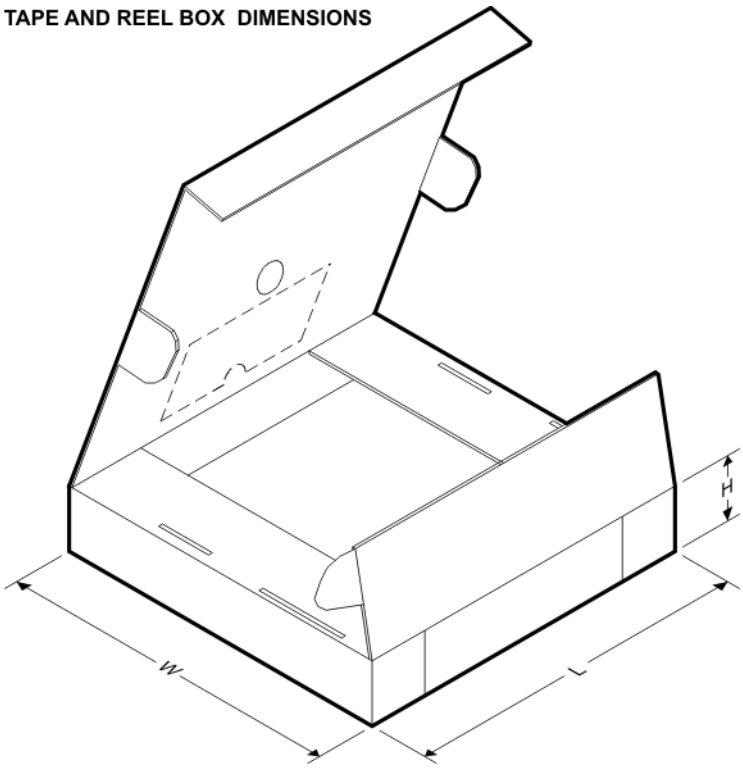

*All dimensions are nominal

Device	Package Type	Package Drawing	Pins	SPQ	Length (mm)	Width (mm)	Height (mm)
LMP2231AMAE/NOPB	SOIC	D	8	250	210.0	185.0	35.0
LMP2231AMAX/NOPB	SOIC	D	8	2500	367.0	367.0	35.0
LMP2231BMAE/NOPB	SOIC	D	8	250	210.0	185.0	35.0
LMP2231BMAX/NOPB	SOIC	D	8	2500	367.0	367.0	35.0

D (R–PDSO–G8) PLASTIC SMALL OUTLINE

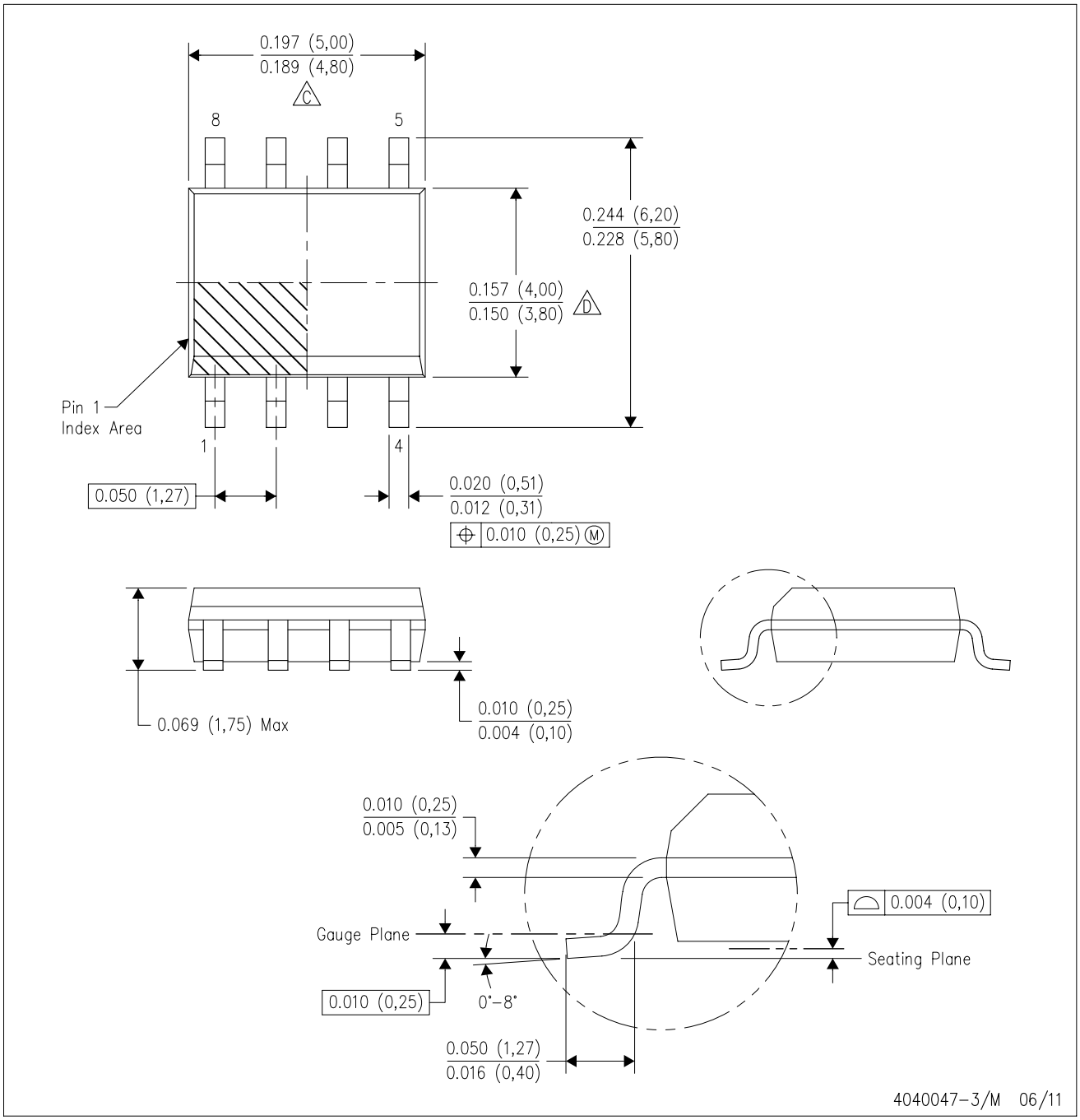

NOTES:
A. All linear dimensions are in inches (millimeters).
B. This drawing is subject to change without notice.
C. Body length does not include mold flash, protrusions, or gate burrs. Mold flash, protrusions, or gate burrs shall not exceed 0.006 (0,15) each side.
D. Body width does not include interlead flash. Interlead flash shall not exceed 0.017 (0,43) each side.
E. Reference JEDEC MS–012 variation AA.

DBV (R–PDSO–G5) PLASTIC SMALL–OUTLINE PACKAGE

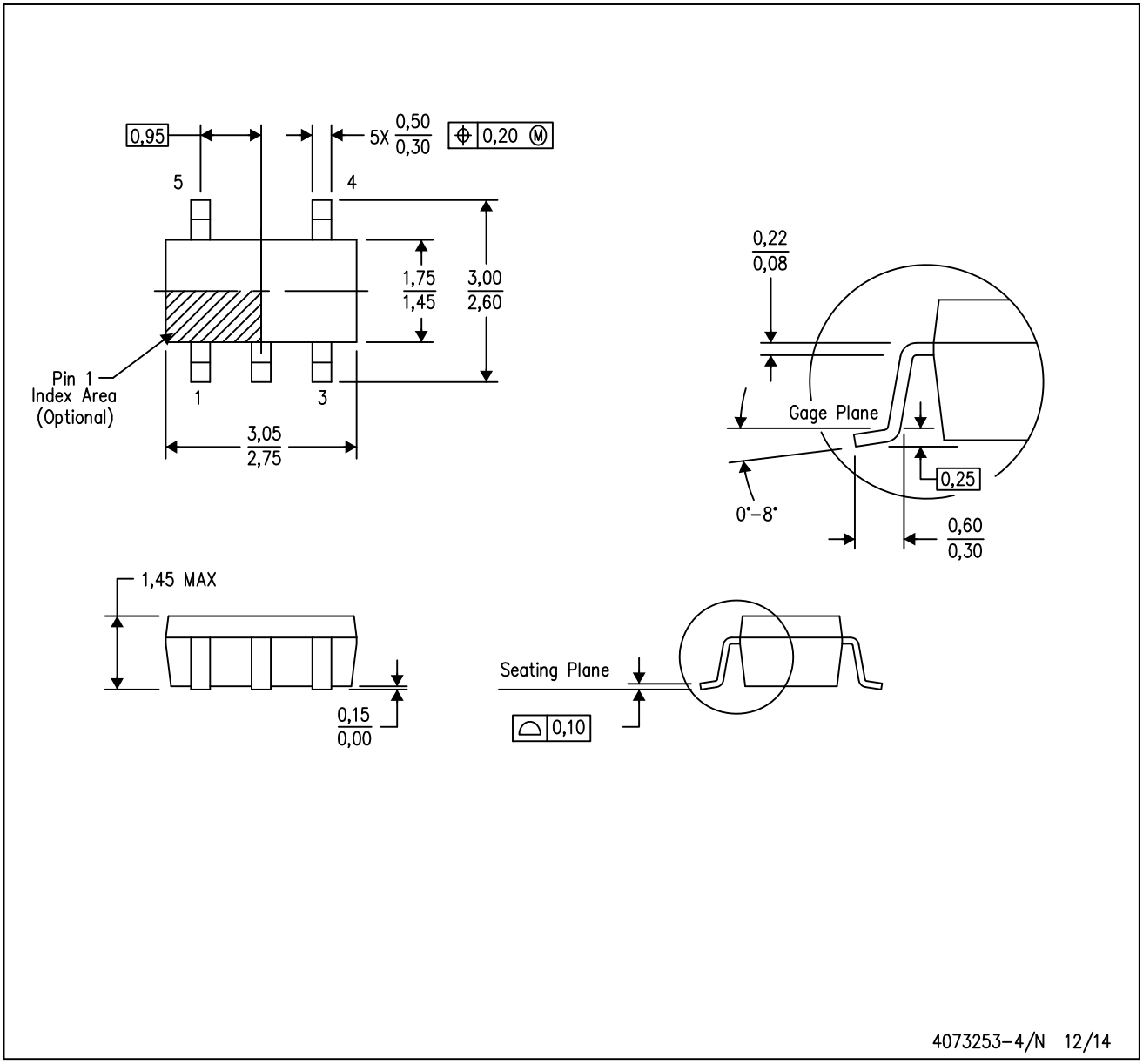

NOTES:
A. All linear dimensions are in millimeters.
B. This drawing is subject to change without notice.
C. Body dimensions do not include mold flash or protrusion. Mold flash and protrusion shall not exceed 0.15 per side.
D. Falls within JEDEC MO–178 Variation AA.

DBV (R-PDSO-G5) PLASTIC SMALL OUTLINE

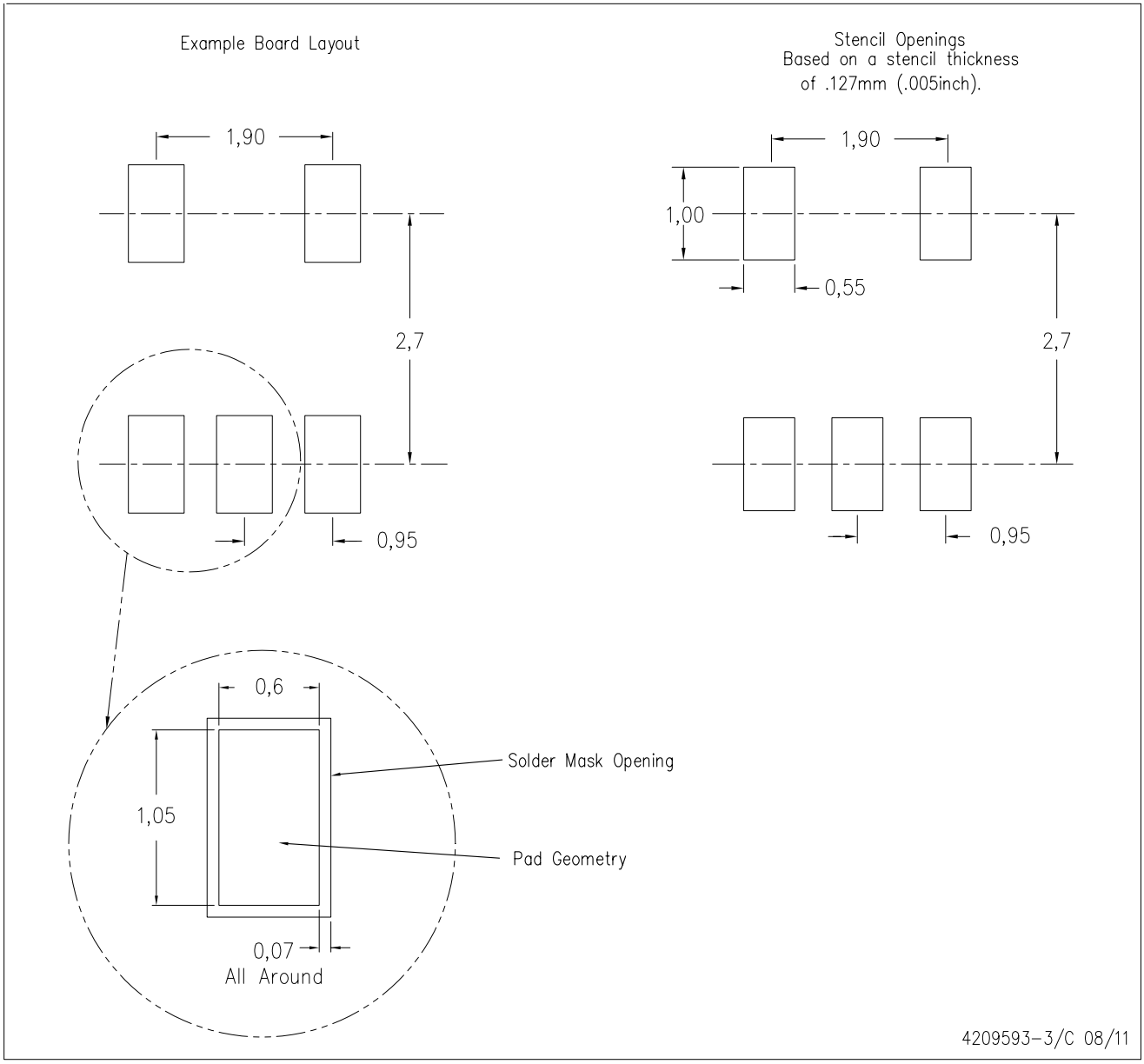

NOTES:
A. All linear dimensions are in millimeters.
B. This drawing is subject to change without notice.
C. Customers should place a note on the circuit board fabrication drawing not to alter the center solder mask defined pad.
D. Publication IPC-7351 is recommended for alternate designs.
E. Laser cutting apertures with trapezoidal walls and also rounding corners will offer better paste release. Customers should contact their board assembly site for stencil design recommendations. Example stencil design based on a 50% volumetric metal load solder paste. Refer to IPC-7525 for other stencil recommendations.

IMPORTANT NOTICE

Texas Instruments Incorporated and its subsidiaries (TI) reserve the right to make corrections, enhancements, improvements and other changes to its semiconductor products and services per JESD46, latest issue, and to discontinue any product or service per JESD48, latest issue. Buyers should obtain the latest relevant information before placing orders and should verify that such information is current and complete. All semiconductor products (also referred to herein as “components”) are sold subject to TI’s terms and conditions of sale supplied at the time of order acknowledgment.

TI warrants performance of its components to the specifications applicable at the time of sale, in accordance with the warranty in TI’s terms and conditions of sale of semiconductor products. Testing and other quality control techniques are used to the extent TI deems necessary to support this warranty. Except where mandated by applicable law, testing of all parameters of each component is not necessarily performed.

TI assumes no liability for applications assistance or the design of Buyers’ products. Buyers are responsible for their products and applications using TI components. To minimize the risks associated with Buyers’ products and applications, Buyers should provide adequate design and operating safeguards.

TI does not warrant or represent that any license, either express or implied, is granted under any patent right, copyright, mask work right, or other intellectual property right relating to any combination, machine, or process in which TI components or services are used. Information published by TI regarding third-party products or services does not constitute a license to use such products or services or a warranty or endorsement thereof. Use of such information may require a license from a third party under the patents or other intellectual property of the third party, or a license from TI under the patents or other intellectual property of TI.

Reproduction of significant portions of TI information in TI data books or data sheets is permissible only if reproduction is without alteration and is accompanied by all associated warranties, conditions, limitations, and notices. TI is not responsible or liable for such altered documentation. Information of third parties may be subject to additional restrictions.

Resale of TI components or services with statements different from or beyond the parameters stated by TI for that component or service voids all express and any implied warranties for the associated TI component or service and is an unfair and deceptive business practice. TI is not responsible or liable for any such statements.

Buyer acknowledges and agrees that it is solely responsible for compliance with all legal, regulatory and safety-related requirements concerning its products, and any use of TI components in its applications, notwithstanding any applications-related information or support that may be provided by TI. Buyer represents and agrees that it has all the necessary expertise to create and implement safeguards which anticipate dangerous consequences of failures, monitor failures and their consequences, lessen the likelihood of failures that might cause harm and take appropriate remedial actions. Buyer will fully indemnify TI and its representatives against any damages arising out of the use of any TI components in safety-critical applications.

In some cases, TI components may be promoted specifically to facilitate safety-related applications. With such components, TI’s goal is to help enable customers to design and create their own end-product solutions that meet applicable functional safety standards and requirements. Nonetheless, such components are subject to these terms.

No TI components are authorized for use in FDA Class III (or similar life-critical medical equipment) unless authorized officers of the parties have executed a special agreement specifically governing such use.

Only those TI components which TI has specifically designated as military grade or “enhanced plastic” are designed and intended for use in military/aerospace applications or environments. Buyer acknowledges and agrees that any military or aerospace use of TI components which have ***not*** been so designated is solely at the Buyer's risk, and that Buyer is solely responsible for compliance with all legal and regulatory requirements in connection with such use.

TI has specifically designated certain components as meeting ISO/TS16949 requirements, mainly for automotive use. In any case of use of non-designated products, TI will not be responsible for any failure to meet ISO/TS16949.

Products		**Applications**	
Audio	www.ti.com/audio	Automotive and Transportation	www.ti.com/automotive
Amplifiers	amplifier.ti.com	Communications and Telecom	www.ti.com/communications
Data Converters	dataconverter.ti.com	Computers and Peripherals	www.ti.com/computers
DLP® Products	www.dlp.com	Consumer Electronics	www.ti.com/consumer-apps
DSP	dsp.ti.com	Energy and Lighting	www.ti.com/energy
Clocks and Timers	www.ti.com/clocks	Industrial	www.ti.com/industrial
Interface	interface.ti.com	Medical	www.ti.com/medical
Logic	logic.ti.com	Security	www.ti.com/security
Power Mgmt	power.ti.com	Space, Avionics and Defense	www.ti.com/space-avionics-defense
Microcontrollers	microcontroller.ti.com	Video and Imaging	www.ti.com/video
RFID	www.ti-rfid.com		
OMAP Applications Processors	www.ti.com/omap	**TI E2E Community**	e2e.ti.com
Wireless Connectivity	www.ti.com/wirelessconnectivity		

Mailing Address: Texas Instruments, Post Office Box 655303, Dallas, Texas 75265
Copyright © 2016, Texas Instruments Incorporated