21039

1.00MM CENTER FFC JUMPER CABLE (LOW TEMPERATURE) CHART

"A" DIM.	1.18±.079 INCHES 30.00±2.00 MM		2.00±.079 INCHES 51.00±2.00 MM		3.00±.118 INCHES 76.00±3.00 MM		4.00±.118 INCHES 102.00±3.00 MM		5.000±.157 INCHES 127.00±4.00 MM		6.00±.157 INCHES 152.00±4.00 MM		7.00±.157 INCHES 178.00±4.00 MM		8.00±.157 INCHES 203.00±4.00 MM		9.00±.197 INCHES 229.00±5.00 MM		10.00±.197 INCHES 254.00±5.00 MM		12.00±.197 INCHES 305.00±5.00 MM	
BACKER	TYPE "A"	TYPE "D"	TYPE "A"	TYPE "D"	TYPE "A"	TYPE "D"	TYPE "A"	TYPE "D"	TYPE "A"	TYPE "D"	TYPE "A"	TYPE "D"	TYPE "A"	TYPE "D"	TYPE "A"	TYPE "D"	TYPE "A"	TYPE "D"	TYPE "A"	TYPE "D"	TYPE "A"	TYPE "D"
CKTS: 6	210390201	210390202	210390203	210390204	210390205	210390206	210390207	210390208	210390209	210390210	210390211	210390212	210390213	210390214	210390215	210390216	210390217	210390218	210390219	210390220	210390221	210390222
CKTS: 8	210390223	210390224	210390225	210390226	210390227	210390228	210390229	210390230	210390231	210390232	210390233	210390234	210390235	210390236	210390237	210390238	210390239	210390240	210390241	210390242	210390243	210390244
CKTS: 10	210390245	210390246	210390247	210390248	210390249	210390250	210390251	210390252	210390253	210390254	210390255	210390256	210390257	210390258	210390259	210390260	210390261	210390262	210390263	210390264	210390265	210390266
CKTS: 12	210390267	210390268	210390269	210390270	210390271	210390272	210390273	210390274	210390275	210390276	210390277	210390278	210390279	210390280	210390281	210390282	210390283	210390284	210390285	210390286	210390287	210390288
CKTS: 14	210390289	210390290	210390291	210390292	210390293	210390294	210390295	210390296	210390297	210390298	210390299	210390300	210390301	210390302	210390303	210390304	210390305	210390306	210390307	210390308	210390309	210390310
CKTS: 16	210390311	210390312	210390313	210390314	210390315	210390316	210390317	210390318	210390319	210390320	210390321	210390322	210390323	210390324	210390325	210390326	210390327	210390328	210390329	210390330	210390331	210390332
CKTS: 18	210390333	210390334	210390335	210390336	210390337	210390338	210390339	210390340	210390341	210390342	210390343	210390344	210390345	210390346	210390347	210390348	210390349	210390350	210390351	210390352	210390353	210390354
CKTS: 20	210390355	210390356	210390357	210390358	210390359	210390360	210390361	210390362	210390363	210390364	210390365	210390366	210390367	210390368	210390369	210390370	210390371	210390372	210390373	210390374	210390375	210390376
CKTS: 22	210390377	210390378	210390379	210390380	210390381	210390382	210390383	210390384	210390385	210390386	210390387	210390388	210390389	210390390	210390391	210390392	210390393	210390394	210390395	210390396	210390397	210390398
CKTS: 24	210390399	210390400	210390401	210390402	210390403	210390404	210390405	210390406	210390407	210390408	210390409	210390410	210390411	210390412	210390413	210390414	210390415	210390416	210390417	210390418	210390419	210390420
CKTS: 26	210390421	210390422	210390423	210390424	210390425	210390426	210390427	210390428	210390429	210390430	210390431	210390432	210390433	210390434	210390435	210390436	210390437	210390438	210390439	210390440	210390441	210390442
CKTS: 28	210390443	210390444	210390445	210390446	210390447	210390448	210390449	210390450	210390451	210390452	210390453	210390454	210390455	210390456	210390457	210390458	210390459	210390460	210390461	210390462	210390463	210390464
CKTS: 30	210390465	210390466	210390467	210390468	210390469	210390470	210390471	210390472	210390473	210390474	210390475	210390476	210390477	210390478	210390479	210390480	210390481	210390482	210390483	210390484	210390485	210390486
CKTS: 32	210390487	210390488	210390489	210390490	210390491	210390492	210390493	210390494	210390495	210390496	210390497	210390498	210390499	210390500	210390501	210390502	210390503	210390504	210390505	210390506	210390507	210390508
CKTS: 34	210390509	210390510	210390511	210390512	210390513	210390514	210390515	210390516	210390517	210390518	210390519	210390520	210390521	210390522	210390523	210390524	210390525	210390526	210390527	210390528	210390529	210390530
CKTS: 36	210390531	210390532	210390533	210390534	210390535	210390536	210390537	210390538	210390539	210390540	210390541	210390542	210390543	210390544	210390545	210390546	210390547	210390548	210390549	210390550	210390551	210390552
CKTS: 38	210390553	210390554	210390555	210390556	210390557	210390558	210390559	210390560	210390561	210390562	210390563	210390564	210390565	210390566	210390567	210390568	210390569	210390570	210390571	210390572	210390573	210390574
CKTS: 40	210390575	210390576	210390577	210390578	210390579	210390580	210390581	210390582	210390583	210390584	210390585	210390586	210390587	210390588	210390589	210390590	210390591	210390592	210390593	210390594	210390595	210390596

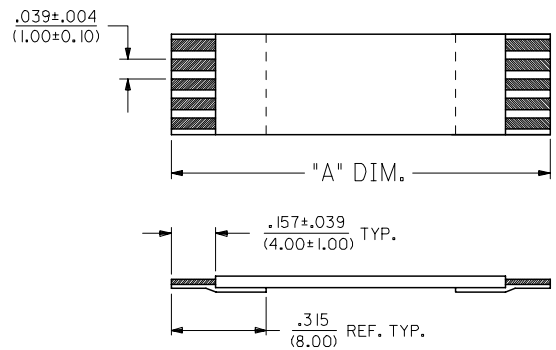

TYPE "A"

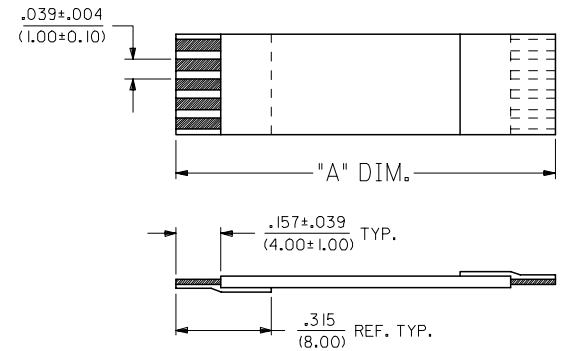

TYPE "D"

NOTES:

1. NO PRINTING ON JUMPER CABLE UNLESS OTHERWISE SPECIFIED. IF PRINTING IS REQUIRED THEN IT WOULD BE CONSIDERED A SPECIAL JUMPER CABLE.

DD-MMM-YYYY HH:MM WORKAREA PLOT GRP:&&&USERNAME&&&

EC NO. UAU2000-0232
DRWN: DEMEO 00/02/28
CHK: PREMO 00/02/28
APPR: GEIB 00/02/28
DESCRIPTION
REV B

QUALITY SYMBOLS
MAJOR = 0
CRITICAL (C) = 0

GENERAL TOLERANCES: (UNLESS SPECIFIED)

	mm	INCH
4 PLACES	±0.	±.
3 PLACES	±0.	±.
2 PLACES	±0.	±.
1 PLACE	±0.	±.
ANGULAR: ±		0

DRAFT WHERE APPLICABLE MUST REMAIN WITHIN DIMENSIONS

SCALE: N/A
DESIGN UNITS: ☐ mm ☒ INCH
THIRD ANGLE PROJECTION
DIMENSIONS: ☐ mm INCH ☒ INCH mm ☐ mm ONLY
SHT | REV
REVISE ON CAD ONLY

DRAWN BY & DATE: DEMEO 99/02/19
CHECKED BY & DATE: PREMO 99/02/26
APPROVED BY & DATE: RAYMER 99/02/26

TITLE: 1.00MM CENTER FFC JUMPER CABLE (LOW TEMPERATURE) CHART

MOLEX INCORPORATED

CAD FILENAME: E-21039-001.S01
MATERIAL NO.: SEE CHART
DRAWING NO.: E-21039-001
SHEET NO.: 1 OF 1

THIS DRAWING CONTAINS INFORMATION THAT IS PROPRIETARY TO MOLEX INCORPORATED AND SHOULD NOT BE USED WITHOUT WRITTEN PERMISSION.

SIZE C

LBORD.DGN REV A 96/06/12 LEVEL 5

1.00MM CENTER FFC JUMPER CABLE (LOW TEMPERATURE) CHART

"A" DIM.	1.181±.079 INCHES 30±2.00 MM		2±.079 INCHES 51±2.00 MM		3±.118 INCHES 76±3.00 MM		4±.118 INCHES 102±3.00 MM		5±.157 INCHES 127±4.00 MM		6±.157 INCHES 152±4.00 MM		7±.157 INCHES 178±4.00 MM		8±.157 INCHES 203±4.00 MM		9±.197 INCHES 229±5.00 MM		10±.197 INCHES 254±5.00 MM		12±.197 INCHES 305±5.00 MM	
BACKER	TYPE "A"	TYPE "D"	TYPE "A"	TYPE "D"	TYPE "A"	TYPE "D"	TYPE "A"	TYPE "D"	TYPE "A"	TYPE "D"	TYPE "A"	TYPE "D"	TYPE "A"	TYPE "D"	TYPE "A"	TYPE "D"	TYPE "A"	TYPE "D"	TYPE "A"	TYPE "D"	TYPE "A"	TYPE "D"
CKTS: 6	210390201	210390202	210390203	210390204	210390205	210390206	210390207	210390208	210390209	210390210	210390211	210390212	210390213	210390214	210390215	210390216	210390217	210390218	210390219	210390220	210390221	210390222
CKTS: 8	210390223	210390224	210390225	210390226	210390227	210390228	210390229	210390230	210390231	210390232	210390233	210390234	210390235	210390236	210390237	210390238	210390239	210390240	210390241	210390242	210390243	210390244
CKTS: 10	210390245	210390246	210390247	210390248	210390249	210390250	210390251	210390252	210390253	210390254	210390255	210390256	210390257	210390258	210390259	210390260	210390261	210390262	210390263	210390264	210390265	210390266
CKTS: 12	210390267	210390268	210390269	210390270	210390271	210390272	210390273	210390274	210390275	210390276	210390277	210390278	210390279	210390280	210390281	210390282	210390283	210390284	210390285	210390286	210390287	210390288
CKTS: 14	210390289	210390290	210390291	210390292	210390293	210390294	210390295	210390296	210390297	210390298	210390299	210390300	210390301	210390302	210390303	210390304	210390305	210390306	210390307	210390308	210390309	210390310
CKTS: 16	210390311	210390312	210390313	210390314	210390315	210390316	210390317	210390318	210390319	210390320	210390321	210390322	210390323	210390324	210390325	210390326	210390327	210390328	210390329	210390330	210390331	210390332
CKTS: 18	210390333	210390334	210390335	210390336	210390337	210390338	210390339	210390340	210390341	210390342	210390343	210390344	210390345	210390346	210390347	210390348	210390349	210390350	210390351	210390352	210390353	210390354
CKTS: 20	210390355	210390356	210390357	210390358	210390359	210390360	210390361	210390362	210390363	210390364	210390365	210390366	210390367	210390368	210390369	210390370	210390371	210390372	210390373	210390374	210390375	210390376
CKTS: 22	210390377	210390378	210390379	210390380	210390381	210390382	210390383	210390384	210390385	210390386	210390387	210390388	210390389	210390390	210390391	210390392	210390393	210390394	210390395	210390396	210390397	210390398
CKTS: 24	210390399	210390400	210390401	210390402	210390403	210390404	210390405	210390406	210390407	210390408	210390409	210390410	210390411	210390412	210390413	210390414	210390415	210390416	210390417	210390418	210390419	210390420
CKTS: 26	210390421	210390422	210390423	210390424	210390425	210390426	210390427	210390428	210390429	210390430	210390431	210390432	210390433	210390434	210390435	210390436	210390437	210390438	210390439	210390440	210390441	210390442
CKTS: 28	210390443	210390444	210390445	210390446	210390447	210390448	210390449	210390450	210390451	210390452	210390453	210390454	210390455	210390456	210390457	210390458	210390459	210390460	210390461	210390462	210390463	210390464
CKTS: 30	210390465	210390466	210390467	210390468	210390469	210390470	210390471	210390472	210390473	210390474	210390475	210390476	210390477	210390478	210390479	210390480	210390481	210390482	210390483	210390484	210390485	210390486
CKTS: 32	210390487	210390488	210390489	210390490	210390491	210390492	210390493	210390494	210390495	210390496	210390497	210390498	210390499	210390500	210390501	210390502	210390503	210390504	210390505	210390506	210390507	210390508
CKTS: 34	210390509	210390510	210390511	210390512	210390513	210390514	210390515	210390516	210390517	210390518	210390519	210390520	210390521	210390522	210390523	210390524	210390525	210390526	210390527	210390528	210390529	210390530
CKTS: 36	210390531	210390532	210390533	210390534	210390535	210390536	210390537	210390538	210390539	210390540	210390541	210390542	210390543	210390544	210390545	210390546	210390547	210390548	210390549	210390550	210390551	210390552
CKTS: 38	210390553	210390554	210390555	210390556	210390557	210390558	210390559	210390560	210390561	210390562	210390563	210390564	210390565	210390566	210390567	210390568	210390569	210390570	210390571	210390572	210390573	210390574
CKTS: 40	210390575	210390576	210390577	210390578	210390579	210390580	210390581	210390582	210390583	210390584	210390585	210390586	210390587	210390588	210390589	210390590	210390591	210390592	210390593	210390594	210390595	210390596

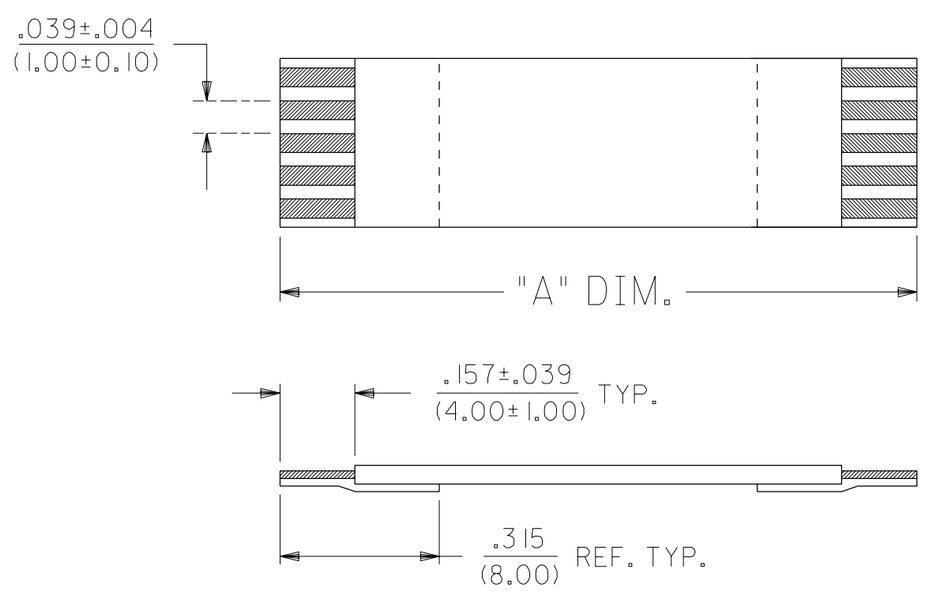

TYPE "A"

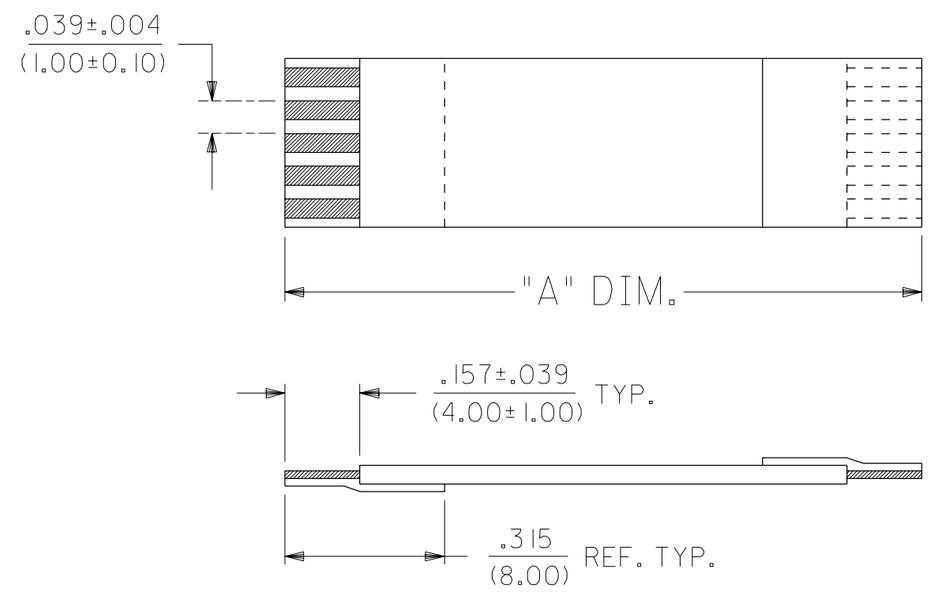

TYPE "D"

NOTES:

1. NO PRINTING ON JUMPER CABLE UNLESS OTHERWISE SPECIFIED. IF PRINTING IS REQUIRED THEN IT WOULD BE CONSIDERED A SPECIAL JUMPER CABLE.

EC NO. UAU2000-0374
DRWN: DEMEO 00/06/28
CH'K: PREMO 00/06/28
APPR: GEIB 00/06/28
DESCRIPTION
C
REV

QUALITY SYMBOLS
MAJOR = 0
CRITICAL C = 0

GENERAL TOLERANCES: (UNLESS SPECIFIED)

	mm	INCH
4 PLACES	±0.	±.
3 PLACES	±0.	±.
2 PLACES	±0.	±.
1 PLACE	±0.	±.
ANGULAR: ±		°

DRAFT WHERE APPLICABLE MUST REMAIN WITHIN DIMENSIONS

SCALE N/A
DESIGN UNITS ☐mm ☒INCH
THIRD ANGLE PROJECTION
DIMENSIONS: ☐ mm/INCH ☒ INCH/mm ☐ mm ONLY
SHT REV
REVISE ON CAD ONLY

DRAWN BY & DATE DEMEO 99/02/19
CHECKED BY & DATE PREMO 99/02/26
APPROVED BY & DATE RAYMER 99/02/26

TITLE: 1.00MM CENTER FFC JUMPER CABLE (LOW TEMPERATURE) CHART

molex MOLEX INCORPORATED

CAD FILENAME E-21039-001.S01
MATERIAL NO. SEE CHART
DRAWING NO. SD-21039-001
SHEET NO. 1 OF 1

THIS DRAWING CONTAINS INFORMATION THAT IS PROPRIETARY TO MOLEX INCORPORATED AND SHOULD NOT BE USED WITHOUT WRITTEN PERMISSION.

SIZE C