查询ST662A供应商 捷多邦，专业PCB打样工厂，24小时加急出货

SGS-THOMSON MICROELECTRONICS

ST662A

DC-DC CONVERTER FROM 5V TO 12V, 0.03A FOR FLASH MEMORY PROGRAMMING SUPPLY

- OUTPUT VOLTAGE: 12V ± 5%
- SUPPLY VOLTAGE RANGE: 4.5V TO 5.5V
- GUARANTEED OUTPUT CURRENT UP TO 30mA
- VERY LOW QUIESCENT CURRENT: 100µA
- LOGIC CONTROLLED ELECTRONIC SHUTDOWN: 1µA
- JUST CAPACITORS NEEDED (NO INDUCTOR)

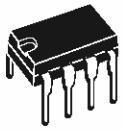

DIP-8

SO-8

DESCRIPTION

The ST662A is a regulated charge pump DC-DC converter. It provides 12V ± 5% output voltage to program byte-wide flash memory, and can supply 30mA output current from input as low as 4.75V

A logic controlled shut down pin that interfaces directly with microprocessor reduces the sypply current to only 1µA

TYPICAL APPLICATION CIRCUIT

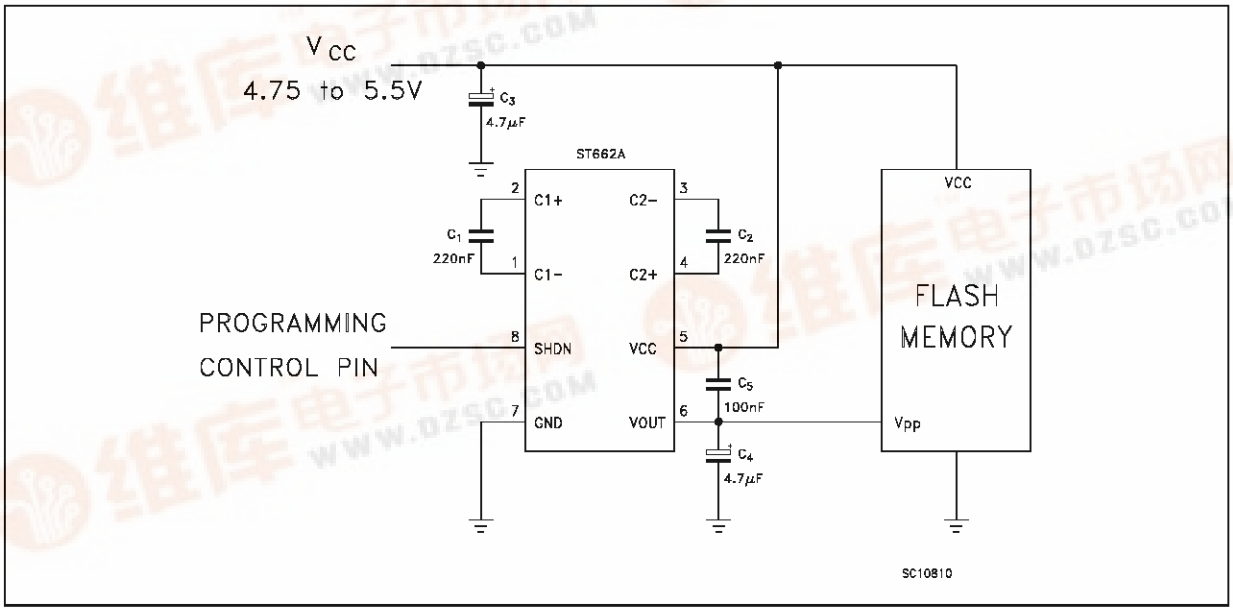

找PDF 维库一下 pdf.dzsc.com

ABSOLUTE MAXIMUM RATINGS

Symbol	Parameter	Value	Unit
V_{cc}	DC Input Voltage to GND	-0.3 to 6	V
SHDN	Shutdown Voltage	-0.3 to V_{CC}+0.3	V
I_o	Output Current Continuous	50	mA
P_{tot}	Power Dissipation	500	mW
T_{op}	Operating Ambient Temperature Range (for **AC SERIES**) (for **AB SERIES**)	0 to 70 - 40 to 85	^oC ^oC
T_{stg}	Storage Temperature Range	- 40 to 150	^oC

Absolute Maximum Rating are those values beyond which damage to the device may occur.
Functional operation under these condition is not implied.

CONNECTION DIAGRAM AND (top view)

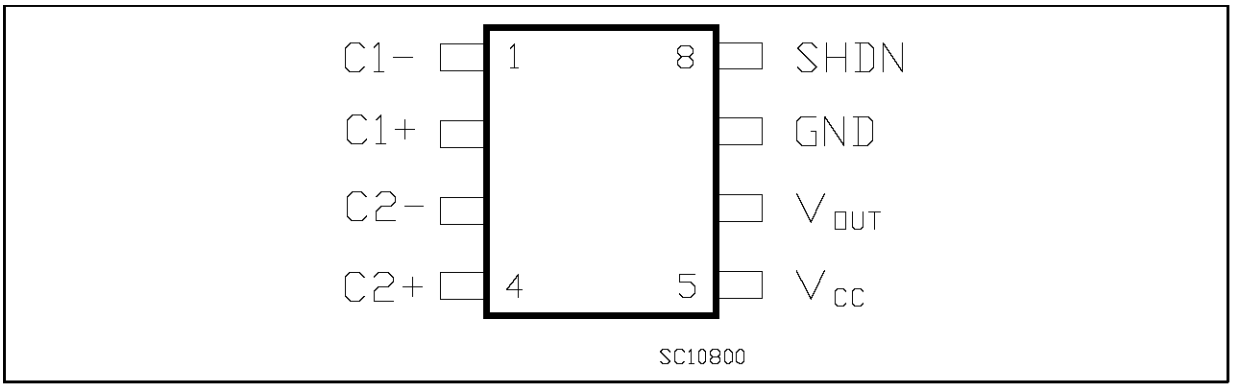

PIN CONNECTIONS

Pin No	Symbol	Name and Function
1	C1-	Negative Terminal For The First Charge Pump Capacitor
2	C1+	Positive Terminal For The First Charge Pump Capacitor
3	C2-	Negative Terminal For The Second Charge Pump Capacitor
4	C2+	Positive Terminal For The Second Charge Pump Capacitor
5	V_{CC}	Supply Voltage
6	V_{OUT}	12V Output Voltage V_{OUT} = V_{CC} When in Sshutdown Mode
7	GND	Ground
8	SHDN	Active High C-MOS logic level Shutdown Input. SHDN is internally pulled up to V_{CC}. Connect to GND for Normal Operation. In Shutdown mode the charge pumps are turned off and V_{OUT} = V_{CC}

ORDERING NUMBERS

Type	DIP-8	SO-8 (*)
ST662AB	ST662ABN	ST662ABD
ST662AC	ST662ACN	ST662ACD

(*) AVAILABLE IN TAPE AND REEL WITH "-TR" SUFFIX

ELECTRICAL CHARACTERISTICS (Refer to the test circuits, V_{CC} = 4.5V to 5.5V $T_a = T_{min}$ to T_{max} unless otherwise specified. Typical Value are referred at T_a = 25 °C)

Symbol	Parameter	Test Conditions	Min.	Typ.	Max.	Unit
V_o	Output Voltage	I_o = 0 mA to 20 mA	11.4	12	12.6	V
V_o	Output Voltage	I_o = 0 mA to 30 mA V_{CC} = 4.75 to 5.5 V	11.4	12	12.6	V
I_{Q1}	Quiescent Current	No Load, V_{SHDN} = 0		100	500	µA
I_{Q2}	Shutdown Current	No Load, $V_{SHDN} = V_{CC}$		1	10	µA
I_{SH}	Shutdown Pin Current	V_{SHDN} = 0V, V_{CC} = 5V $V_{SHDN} = V_{CC}$ = 5V	-50	-12 0	-5	µA µA
V_{il}	Shutdown Input Low Threshold				0.4	V
V_{ih}	Shutdown Input High Threshold		2.4			V
f_o	Oscillator Frequency	V_{CC} = 5V, I_o = 30 mA		400		KHz
ν	Power Efficecy	V_{CC} = 5V, I_o = 30 mA		72		%
R_{sw}	V_{CC} - V_{OUT} Switch Impedance	$V_{SHDN} = V_{CC}$ = 5V, I_o = 100 µA		1	2	KΩ

Do not overload or short the Output to Ground. If the above conditions are observerd, the device may be damaged.

Output Voltage vs Temperature

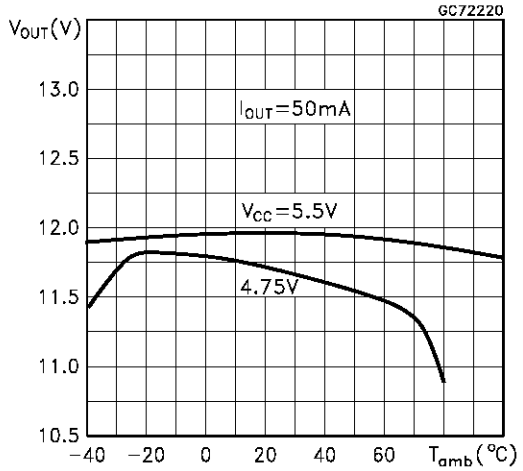

Output Voltage vs Temperature

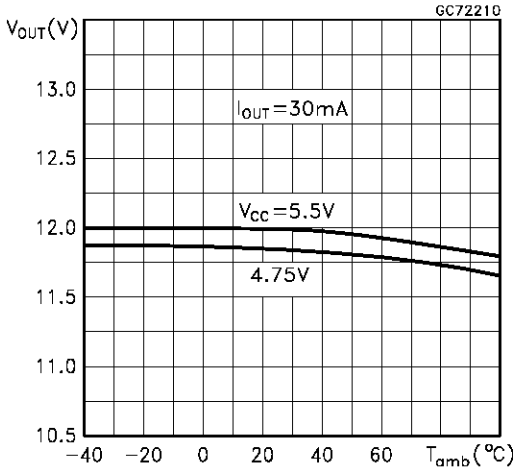

Supply Current vs Temperature

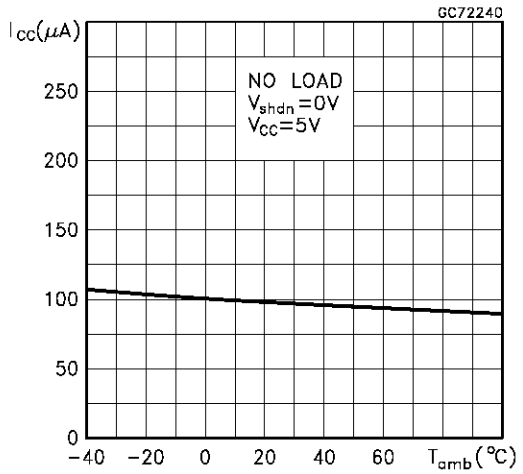

Supply Currernt vs Supply Voltage

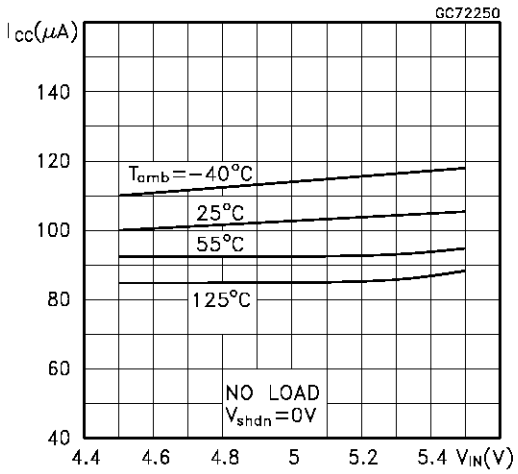

SHDN Pin Current vs Temperature

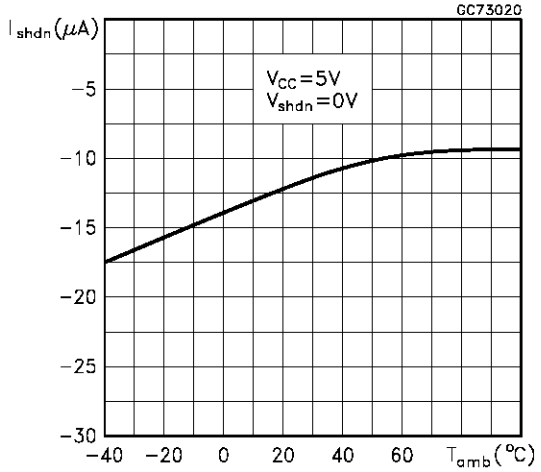

Output Voltage vs Shutdown Input Voltage

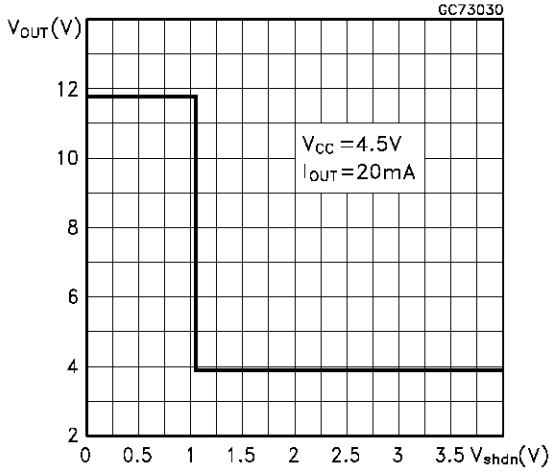

Output Voltage vs Shutdown Input Voltage

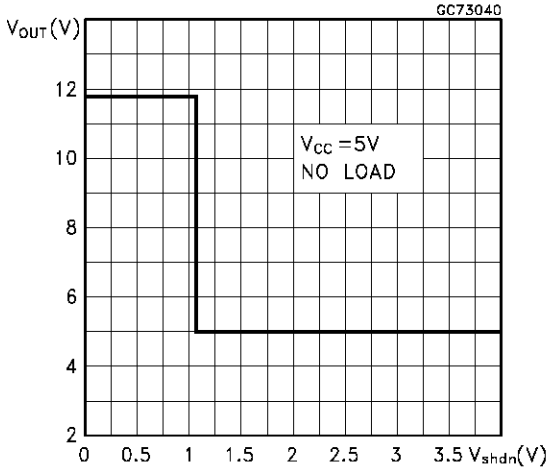

Output Voltage vs Shutdown Input Voltage

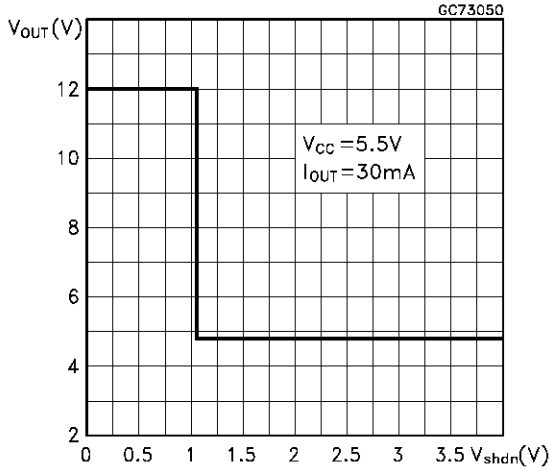

Test Circuit

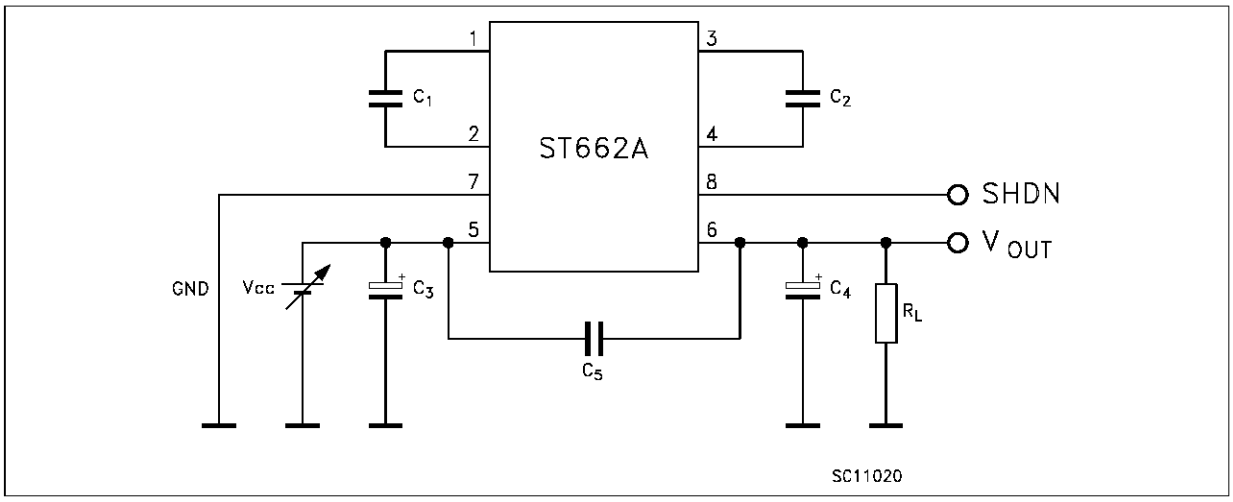

DESCRIPTION

The ST662 is an IC developed to provide a 12V regulated output 30mA from voltage input as low as 4.75 without any inductors. It is useful for a wide range of applications and its performances makes it ideal for flash memory programming supply.

An evaluation kit is provided to facilitate the application. This include a single-side demo board designed for surface-mount components.The operating principle of ST662 (see fig. 1) is to charge C1 and C2 capacitor by closing the S1 switch (while S2 is opened) at the V_{CC} voltage. After S1 will be opened and S2 closed so that C1 and C2 capacitors are placed in series one to each other, and both are in series with Vin.The sum of VC1 and VC2 and Vin is applied to the capacitor C4. This works as voltage tripler. An amplifier error checks the output voltage and blocks the oscillator if the output voltage is greater than 12V.

The shutdown pin is internally pulled to V_{CC}. When it is held low the output voltage rises to +12V. Fig.2 shows the transition time of the shut down pin when the VSHDN goes from 5V to 0V. Input logic levels of this input are CMOS compatible.

Applying a logic high at this input, the V_{OUT} oscillator will be blocked and the V_{OUT} will reach theV_{IN} value by D1. In this condition I_{CC} will be low as 1µA. The fig.3 shows the transition time of the shut down pin when the VSHDN goes from 0V to 5V.

Figure 1: Operating Principle Circuit

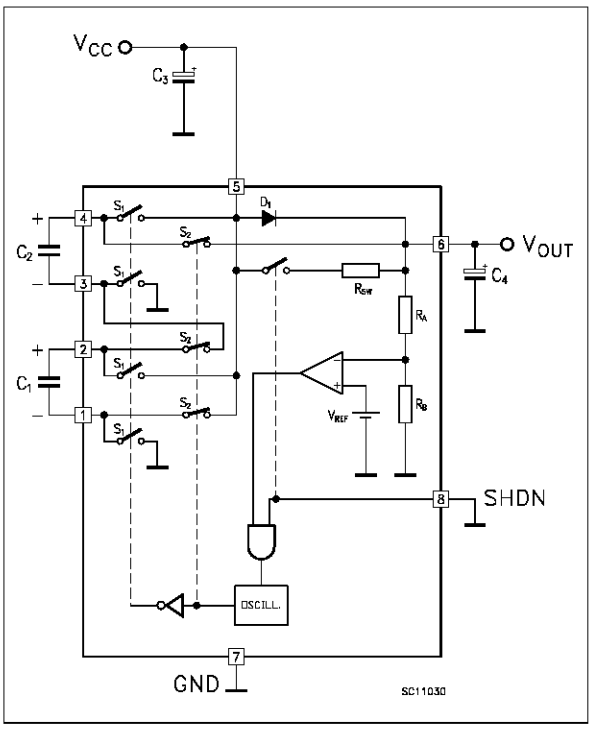

Figure 2: Exiting Shutdown

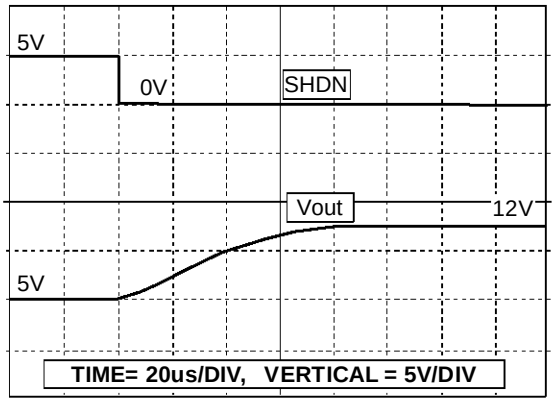

NOTE: V_{CC} = 5V, I_{OUT} = 200µA

Figure 3: Entering Shutdown

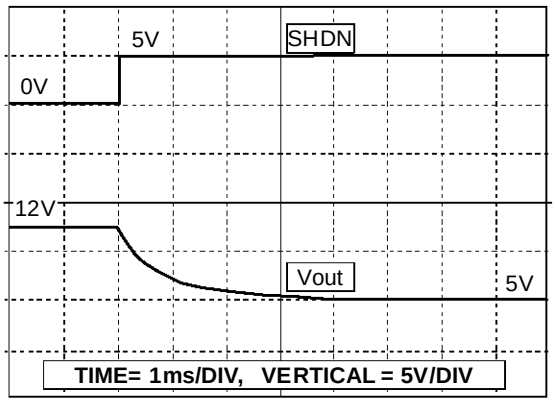

NOTE: V_{CC} = 5V, I_{OUT} = 200µA

APPLICATION CIRCUIT

Based on fast charge/discharge of capacitors, this circuit involves high di/dt values limited only by R_{on} of switches. This implies a critical layout design due to the need to minimize inductive paths and place capacitors as close as possible to the device.

A good layout design is strongly recommended for noise reason. For best performance, use very short connections to the capacitors and the values shown in table 1.

C3 and C4 must have low ESR in order to minimize the output ripple. Their values can be reduced to 2µF and 1µF, respectively, when using ceramic capacitors, but must be of 10µF or larger if aluminium electrolytic are chosen.

C5 must be placed as close to the device as possible and could be omitted if very low output noise performance are not required.

Fig 4 and Fig 5 show, respectively, our EVALUATION kit layout and the relatively electrical shematic.

Figure 4: KIT Lay-out

Figure 5: Electrical Schematic

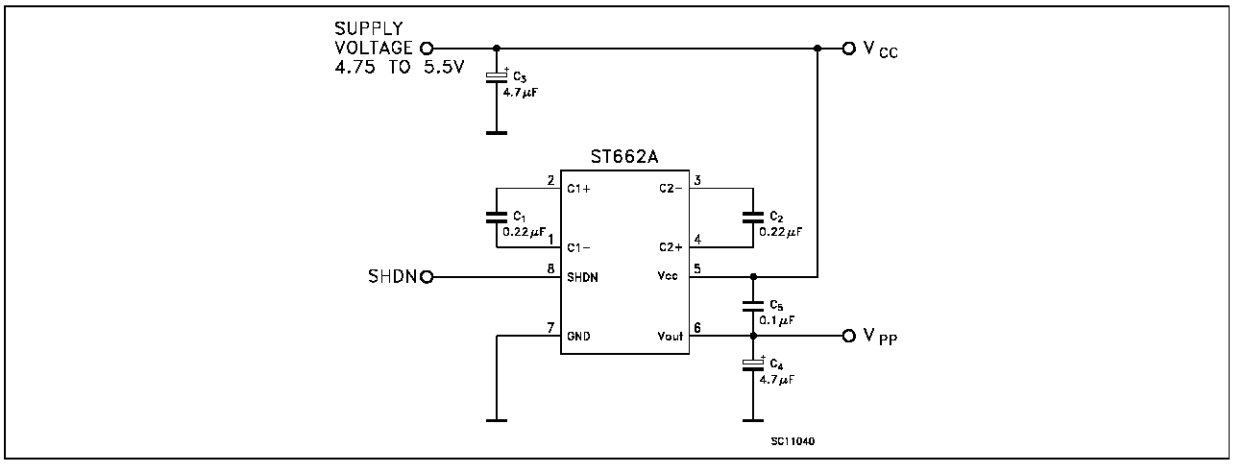

Table 1: List of Components

CAPACITOR	TYPE	VALUE (µF)
Charge Pump C1	Ceramic	0.22
Charge Pump C2	Ceramic	0.22
Input C3	Electrolytic Tantalum	4.7
Output C4	Electrolytic Tantalum	4.7
Decoupling C5	Ceramic	0.1

ST662A OUTPUT PERFORMANCE

Output Voltage vs Output Current

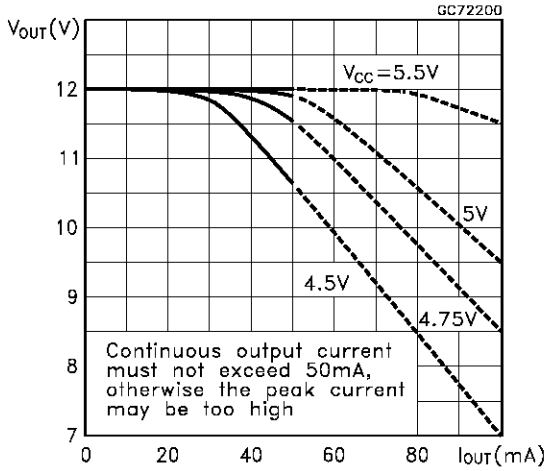

Efficency vs Output Current

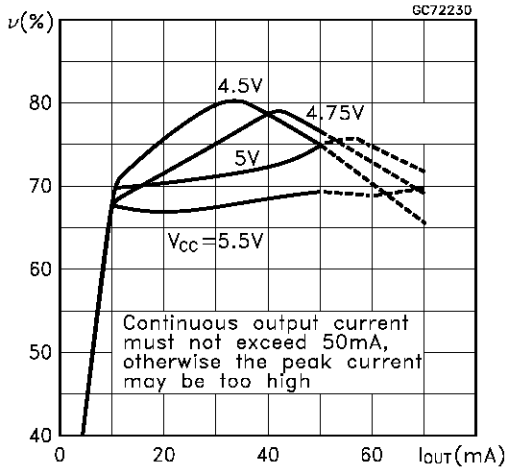

Load Transient Response

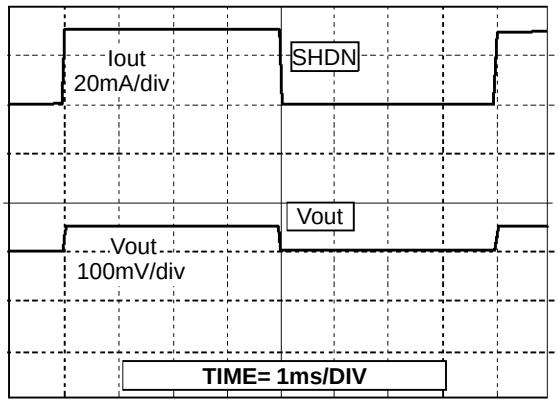

NOTE: V_{CC} = 5V, I_{OUT} = 0 to 30mA

Line Transient Response

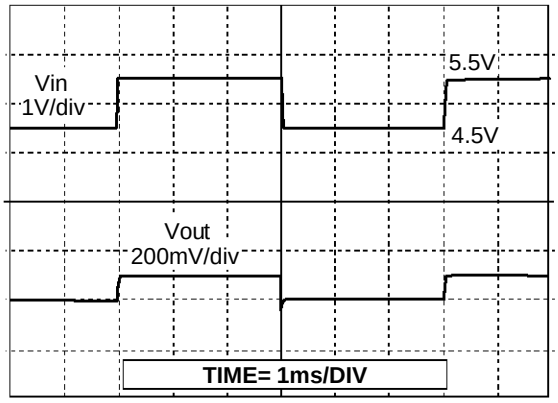

NOTE: V_{CC} = 4.5 to 5.5V, I_{OUT} = 30mA

HOW TO INCREASE OUTPUT CURRENT OR OUTPUT VOLTAGE CAPABILITY

Current capability is limited by R_{on} of internal switches. It is possible to increase it connecting in parallel two or more ST662A devices; each one of them can supply 30mA. The figure 6 shows the electric schematic. The capacitors C3, C4 and C5 must be placed very close to the ICs on the board. If this is not possible, you can place two different capacitors, each of them of half value, very close to the respective integrated circuit.

Fig. 8 show the Output Current capability of the proposed circuit.

If an output voltage greater than 12V is required, it's possible to realize the circuit of the following diagram (figure 7). The relevant Output Current capability is shown in figure 9 in which is shown the output voltage vs load current.

Figure 6: Application Circuit for Two ST662A in Parallel

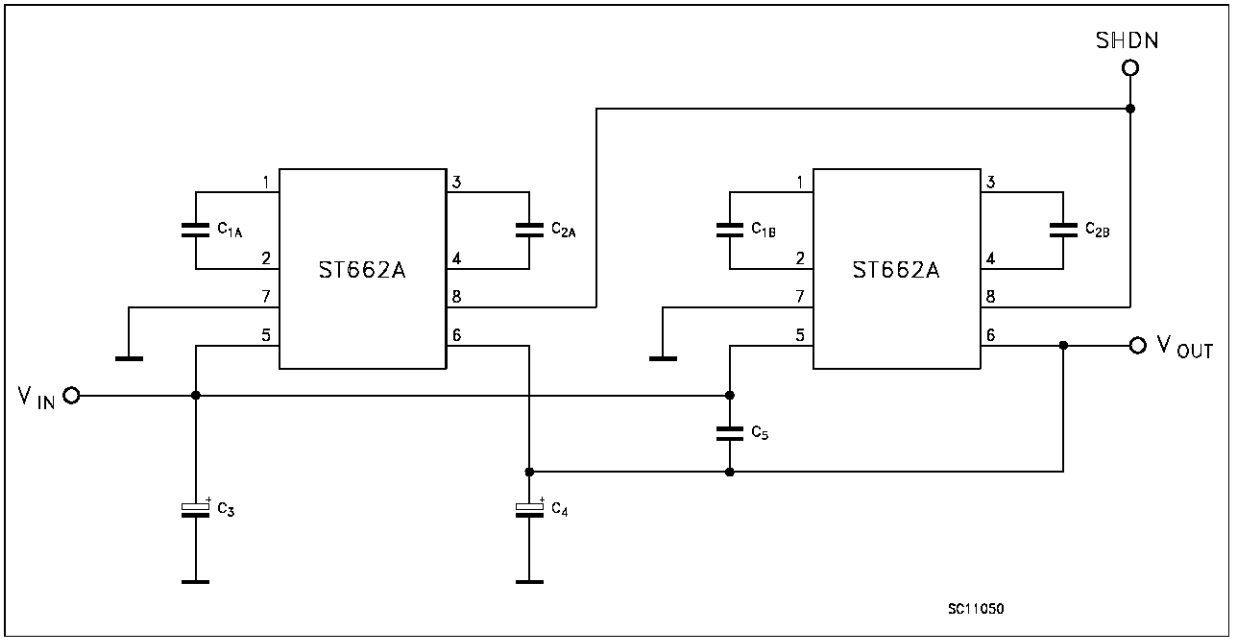

Table 2: List of Components

CAPACITOR	TYPE	VALUE (µF)
C1A	Ceramic	0.22
C2A	Ceramic	0.22
C1B	Ceramic	0.22
C2B	Ceramic	0.22
C3	Electrolytic Tantalum	10
C4	Electrolytic Tantalum	10
C5	Ceramic	0.22

Figure 7: Application Circuit for Output Voltage greater than 12V

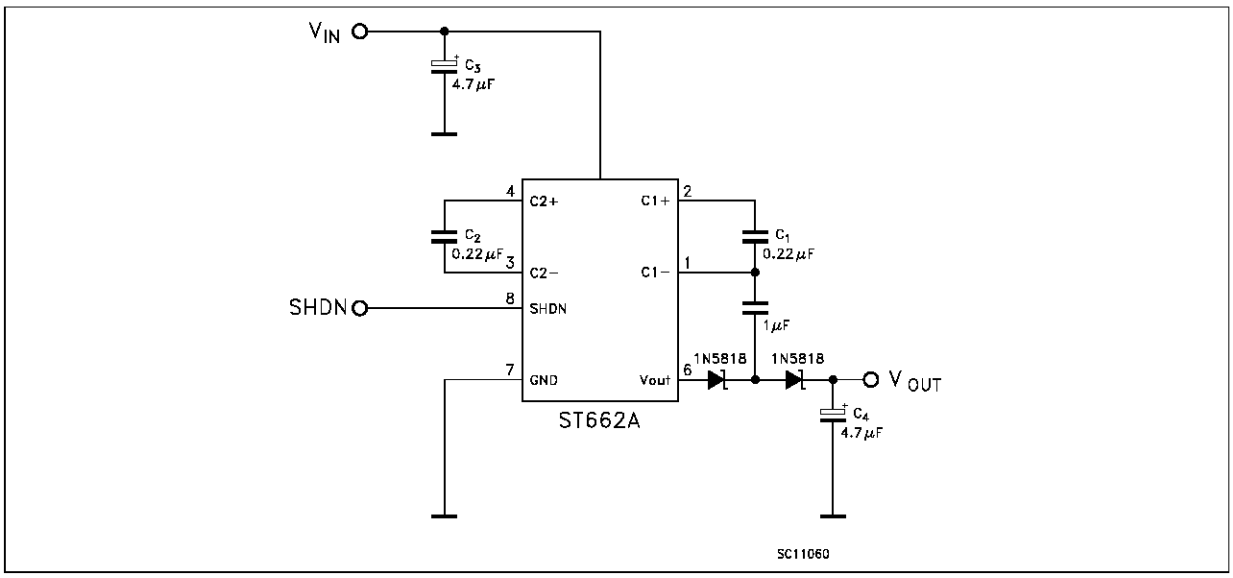

Figure 8: Output Voltage for the Application with Two Device in Parallel

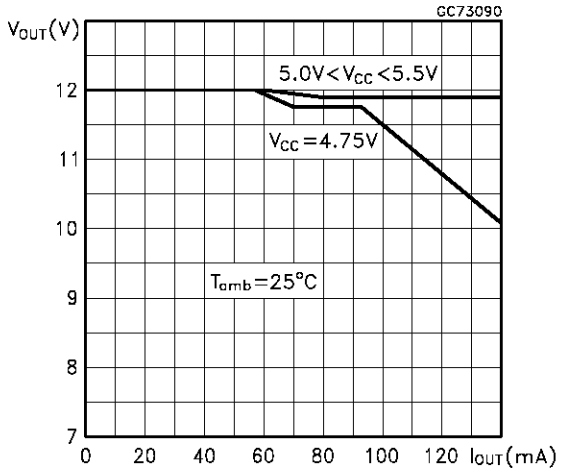

Figure 9: Output Voltage for Application with Output Voltage greater than 12V

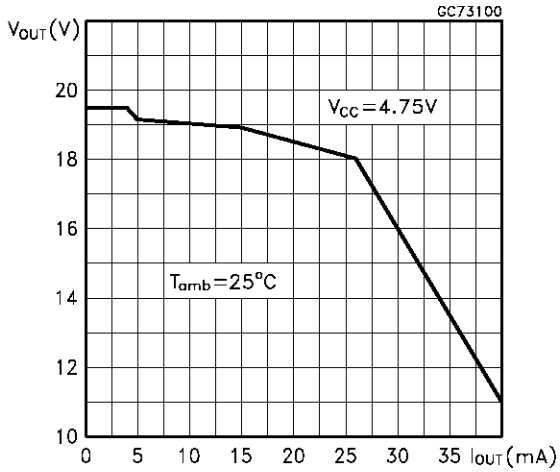

Plastic DIP-8 MECHANICAL DATA

DIM.	mm			inch		
	MIN.	TYP.	MAX.	MIN.	TYP.	MAX.
A		3.3			0.130	
a1	0.7			0.028		
B	1.39		1.65	0.055		0.065
B1	0.91		1.04	0.036		0.041
b		0.5			0.020	
b1	0.38		0.5	0.015		0.020
D			9.8			0.386
E		8.8			0.346	
e		2.54			0.100	
e3		7.62			0.300	
e4		7.62			0.300	
F			7.1			0.280
I			4.8			0.189
L		3.3			0.130	
Z	0.44		1.6	0.017		0.063

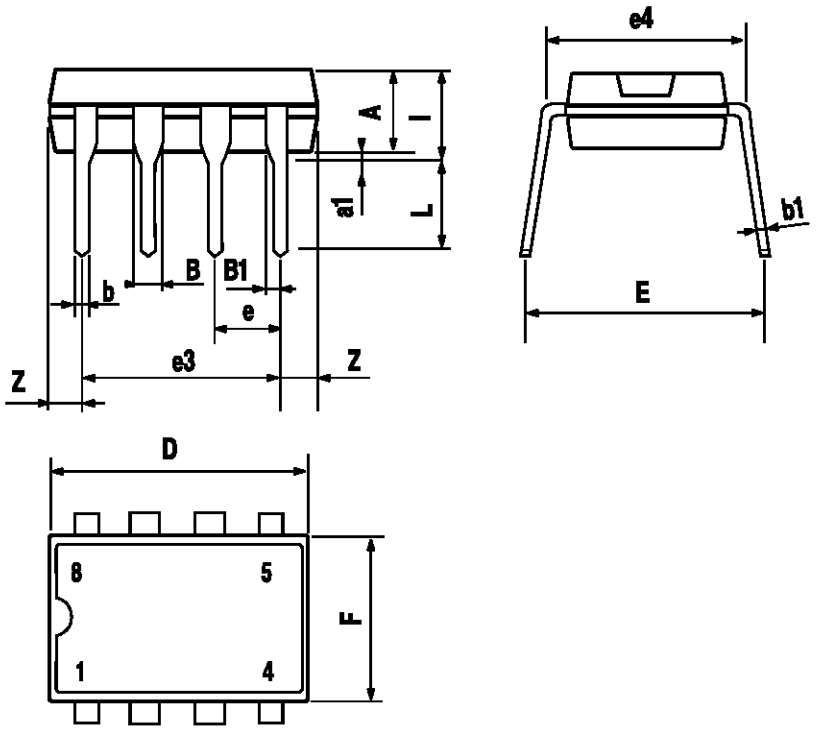

P001F

SO-8 MECHANICAL DATA

DIM.	mm			inch		
	MIN.	TYP.	MAX.	MIN.	TYP.	MAX.
A			1.75			0.068
a1	0.1		0.25	0.003		0.009
a2			1.65			0.064
a3	0.65		0.85	0.025		0.033
b	0.35		0.48	0.013		0.018
b1	0.19		0.25	0.007		0.010
C	0.25		0.5	0.010		0.019
c1	45 (typ.)					
D	4.8		5.0	0.188		0.196
E	5.8		6.2	0.228		0.244
e		1.27			0.050	
e3		3.81			0.150	
F	3.8		4.0	0.14		0.157
L	0.4		1.27	0.015		0.050
M			0.6			0.023
S	8 (max.)					

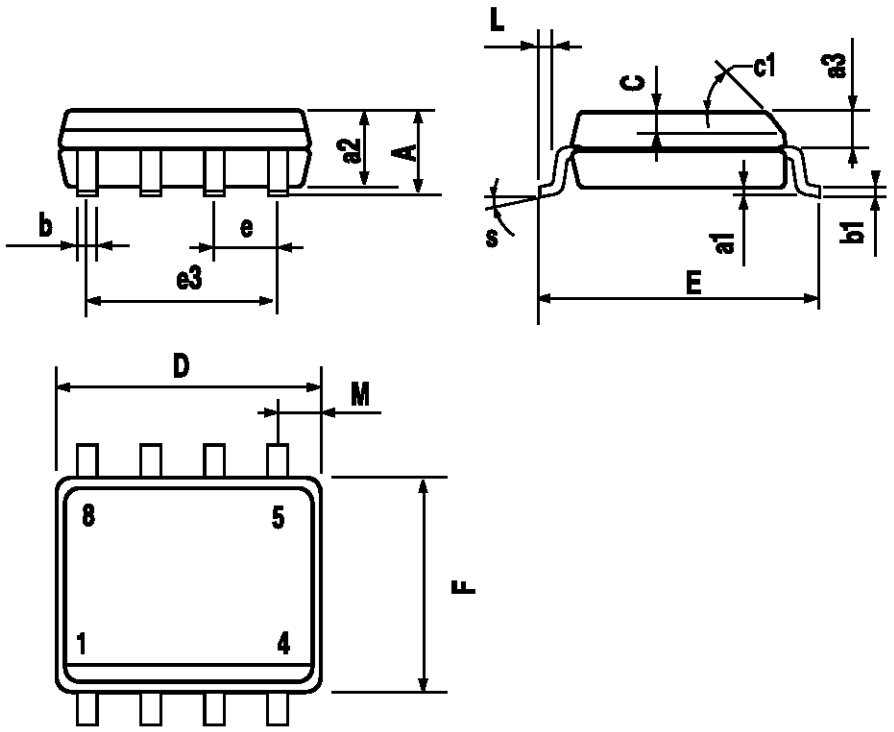

0016023

Information furnished is believed to be accurate and reliable. However, SGS-THOMSON Microelectronics assumes no responsability for the consequences of use of such information nor for any infringement of patents or other rights of third parties which may results from its use. No license is granted by implication or otherwise under any patent or patent rights of SGS-THOMSON Microelectronics. Specifications mentioned in this publication are subject to change without notice. This publication supersedes and replaces all information previously supplied.
SGS-THOMSON Microelectronics products are not authorized for use as critical components in life support devices or systems without express written approval of SGS-THOMSON Microelectonics.

© 1997 SGS-THOMSON Microelectronics - Printed in Italy - All Rights Reserved

SGS-THOMSON Microelectronics GROUP OF COMPANIES
Australia - Brazil - Canada - China - France - Germany - Hong Kong - Italy - Japan - Korea - Malaysia - Malta - Morocco - The Netherlands - Singapore - Spain - Sweden - Switzerland - Taiwan - Thailand - United Kingdom - U.S.A
.