查询2N5011供应商 捷多邦，专业PCB打样工厂，24小时加急出货

SEME LAB

2N5011

Dimensions in mm (inches).

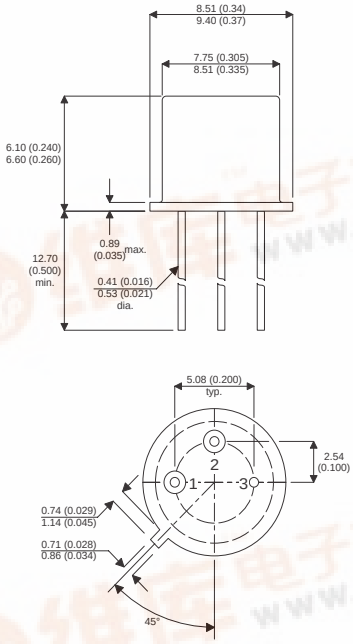

TO39 (TO205AD)
PINOUTS

1 – Emitter 2 – Base 3 – Collector

Bipolar NPN Device in a Hermetically sealed TO39 Metal Package.

Bipolar NPN Device.

V_{CEO} = 600V

I_C = 0.5A

All Semelab hermetically sealed products can be processed in accordance with the requirements of BS, CECC and JAN, JANTX, JANTXV and JANS specifications

Parameter	Test Conditions	Min.	Typ.	Max.	Units
V_{CEO}*				600	V
$I_{C(CONT)}$				0.5	A
h_{FE}	@ 10/25m (V_{CE} / I_C)	30		180	-
f_t			20M		Hz
P_D				2	W

* Maximum Working Voltage

This is a shortform datasheet. For a full datasheet please contact sales@semelab.co.uk.

Semelab Plc reserves the right to change test conditions, parameter limits and package dimensions without notice. Information furnished by Semelab is believed to be both accurate and reliable at the time of going to press. However Semelab assumes no responsibility for any errors or omissions discovered in its use.

找PDF 维库一下 pdf.dzsc.com