查询2SJ276供应商 捷多邦，专业PCB打样工厂，24小时加急出货

SANYO

No.4749

2SJ276

P-Channel MOS Silicon FET

Very High-Speed Switching Applications

Features

- Low ON resistance.
- Very high-speed switching.
- Low-voltage drive.
- Surface mount type device making the following possible.
  - Reduction in the assembling time for 2SJ276-applied equipment.
  - High-density surface mount applications.
  - Small size of 2SJ276-applied equipment.

Absolute Maximum Ratings at Ta = 25°C

				unit
Drain-to-Source Voltage	V_{DSS}		−100	V
Gate-to-Source Voltage	V_{GSS}		±20	V
Drain Current (DC)	I_D		−8	A
Drain Current (Pulse)	I_{DP}	PW≦10μs, duty cycle≦1%	−32	A
Allowable Power Dissipation	P_D		1.65	W
		Tc = 25°C	60	W
Channel Temperature	Tch		150	°C
Storage Temperature	Tstg		−55 to +150	°C

Electrical Characteristics at Ta = 25°C

			min	typ	max	unit
D-S Breakdown Voltage	$V_{(BR)DSS}$	$I_D = -1mA, V_{GS} = 0$	−100			V
G-S Breakdown Voltage	$V_{(BR)GSS}$	$I_G = \pm 100\mu A, V_{DS} = 0$	±20			V
Zero-Gate Voltage Drain Current	I_{DSS}	$V_{DS} = -100V, V_{GS} = 0$			−100	μA
Gate-to-Source Leakage Current	I_{GSS}	$V_{GS} = \pm 16V, V_{DS} = 0$			±10	μA
Gate-to-Source Cutoff Voltage	$V_{GS(off)}$	$V_{DS} = -10V, I_D = -1mA$	−1.0		−2.0	V
Forward Transfer Admittance	$\lvert y_{fs} \rvert$	$V_{DS} = -10V, I_D = -4A$	3.5	6.5		S
Static Drain-to-Source ON-State Resistance	$R_{DS(on)}$	$I_D = -4A, V_{GS} = -10V$		0.22	0.3	Ω
	$R_{DS(on)}$	$I_D = -4A, V_{GS} = -4V$		0.3	0.4	Ω

Continued on next page.

Switching Time Test Circuit

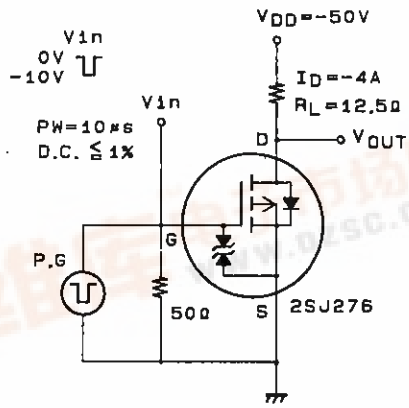

Package Dimensions 2090A

(unit : mm)

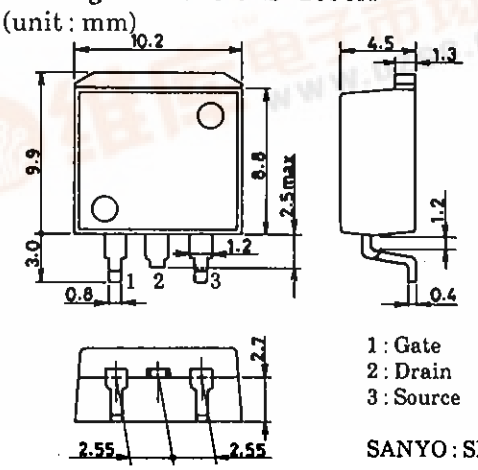

1 : Gate
2 : Drain
3 : Source

SANYO : SMP-FD

找PDF 维库一下 pdf.dzsc.com

Continued from preceding page.

			min	typ	max	unit
Input Capacitance	Ciss	$V_{DS}=-20V, f=1MHz$		1230		pF
Output Capacitance	Coss	$V_{DS}=-20V, f=1MHz$		260		pF
Reverse Transfer Capacitance	Crss	$V_{DS}=-20V, f=1MHz$		50		pF
Turn-ON Delay Time	$t_{d(on)}$	See specified Test Circuit.		16		ns
Rise Time	t_r	〃		27		ns
Turn-OFF Delay Time	$t_{d(off)}$	〃		200		ns
Fall Time	t_f	〃		100		ns
Diode Forward Voltage	V_{SD}	$I_S=-8A, V_{GS}=0$		−1.0	−1.5	V

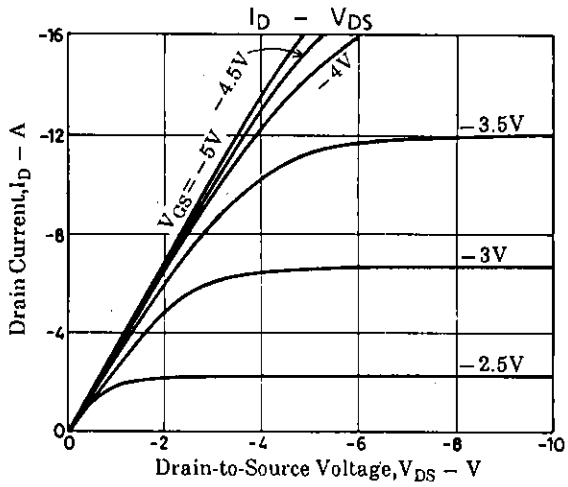

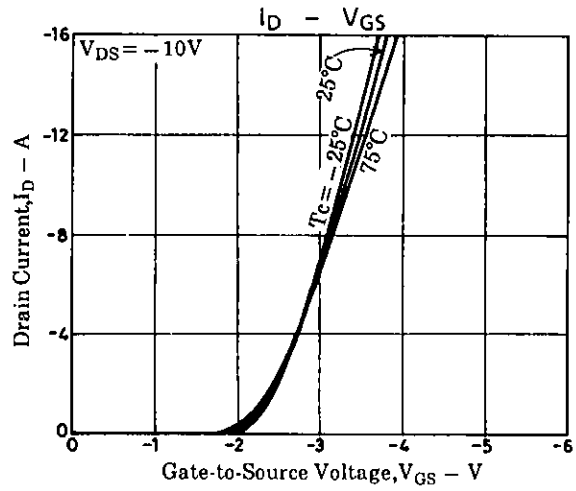

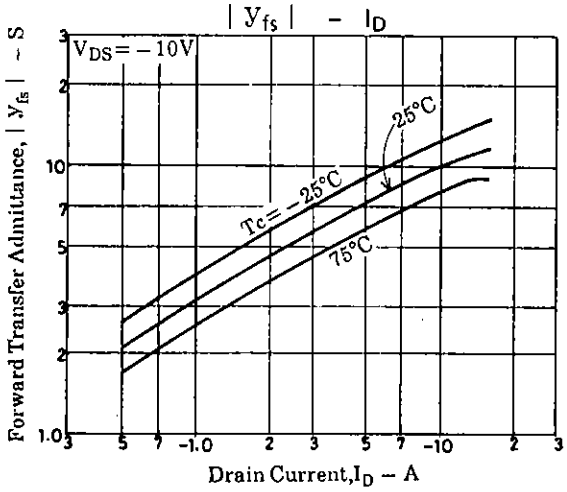

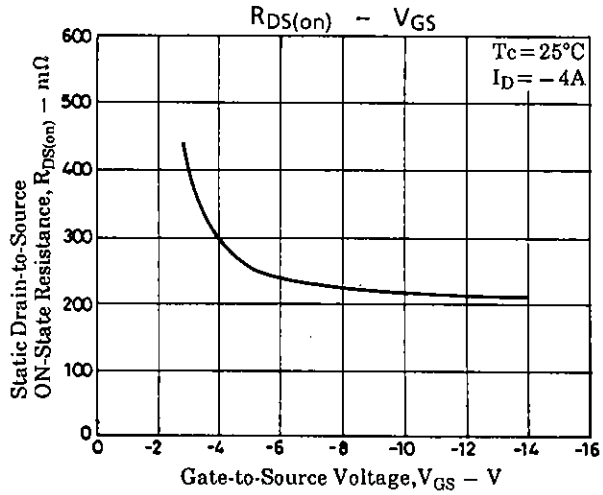

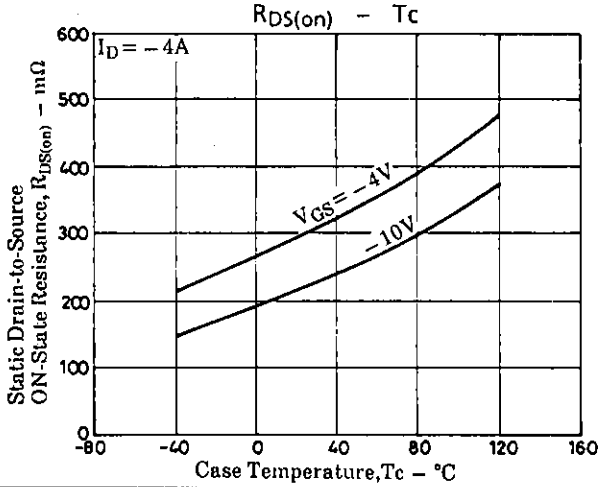

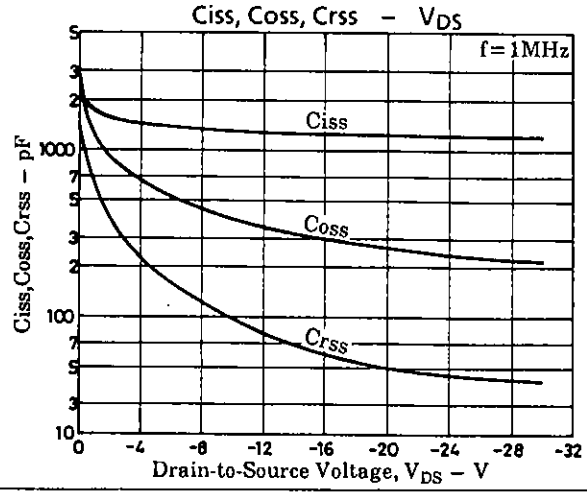

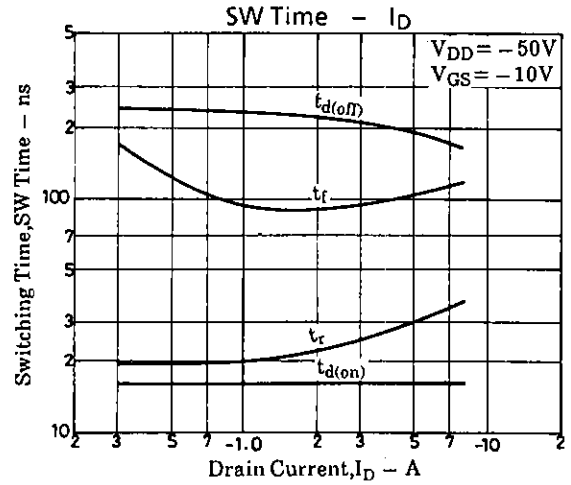

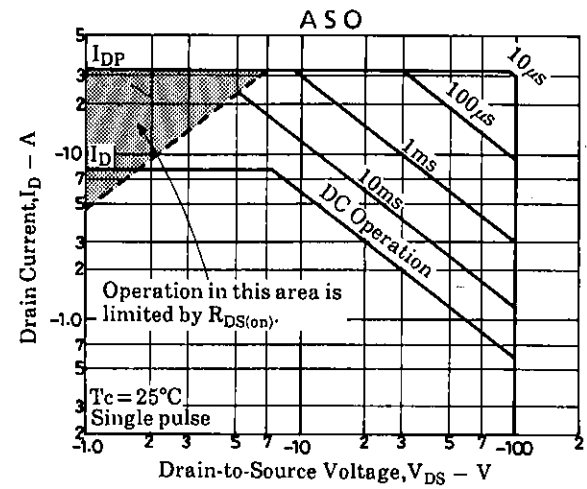

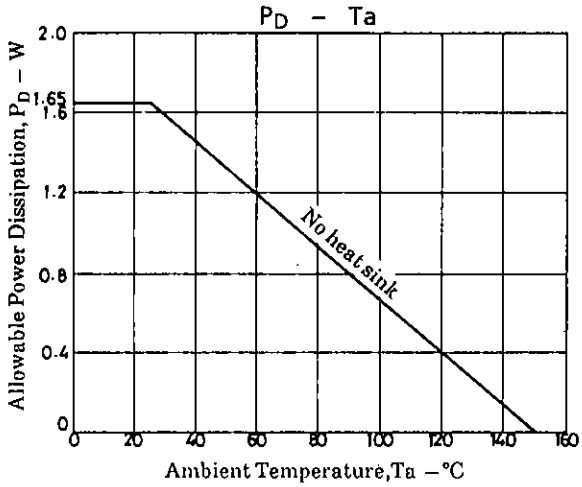

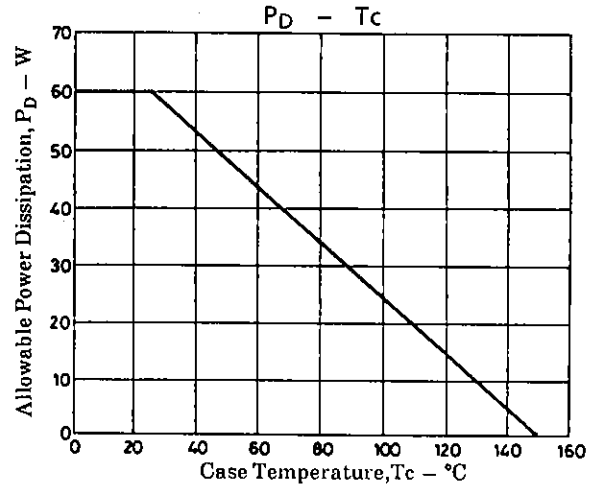

- No products described or contained herein are intended for use in surgical implants, life-support systems, aerospace equipment, nuclear power control systems, vehicles, disaster/crime-prevention equipment and the like, the failure of which may directly or indirectly cause injury, death or property loss.
- Anyone purchasing any products described or contained herein for an above-mentioned use shall:
  ① Accept full responsibility and indemnify and defend SANYO ELECTRIC CO., LTD., its affiliates, subsidiaries and distributors and all their officers and employees, jointly and severally, against any and all claims and litigation and all damages, cost and expenses associated with such use:
  ② Not impose any responsibility for any fault or negligence which may be cited in any such claim or litigation on SANYO ELECTRIC CO., LTD., its affiliates, subsidiaries and distributors or any of their officers and employees jointly or severally.
- Information (including circuit diagrams and circuit parameters) herein is for example only; it is not guaranteed for volume production. SANYO believes information herein is accurate and reliable, but no guarantees are made or implied regarding its use or any infringements of intellectual property rights or other rights of third parties.