查询2SK1306供应商 捷多邦，专业PCB打样工厂，24小时加急出货

2SK1306

Silicon N-Channel MOS FET

HITACHI

Application

High speed power switching

Features

- Low on-resistance
- High speed switching
- Low drive current
- 4 V gate drive device
  — Can be driven from 5 V source
- Suitable for motor drive, DC-DC converter, power switch and solenoid drive

Outline

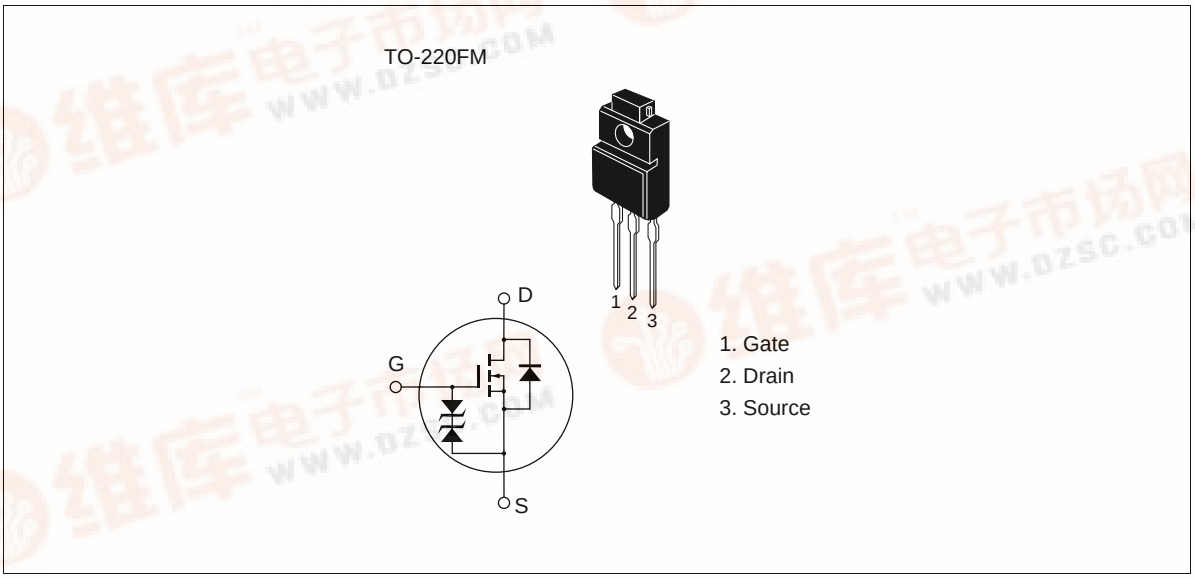

找PDF 维库一下 pdf.dzsc.com

Hitachi semiconductor

Absolute Maximum Ratings (Ta = 25°C)

Item	Symbol	Ratings	Unit
Drain to source voltage	V_{DSS}	100	V
Gate to source voltage	V_{GSS}	±20	V
Drain current	I_D	15	A
Drain peak current	$I_{D(pulse)}$ *1	60	A
Body to drain diode reverse drain current	I_{DR}	15	A
Channel dissipation	Pch*2	30	W
Channel temperature	Tch	150	°C
Storage temperature	Tstg	–55 to +150	°C

Notes: 1. PW ≤ 10 µs, duty cycle ≤ 1%
2. Value at T_C = 25°C

Electrical Characteristics (Ta = 25°C)

Item	Symbol	Min	Typ	Max	Unit	Test conditions
Drain to source breakdown voltage	$V_{(BR)DSS}$	100	—	—	V	I_D = 10 mA, V_{GS} = 0
Gate to source breakdown voltage	$V_{(BR)GSS}$	±20	—	—	V	I_G = ±100 µA, V_{DS} = 0
Gate to source leak current	I_{GSS}	—	—	±10	µA	V_{GS} = ±16 V, V_{DS} = 0
Zero gate voltage drain current	I_{DSS}	—	—	250	µA	V_{DS} = 80 V, V_{GS} = 0
Gate to source cutoff voltage	$V_{GS(off)}$	1.0	—	2.0	V	I_D = 1 mA, V_{DS} = 10 V
Static drain to source on state resistance	$R_{DS(on)}$	—	0.10	0.13	Ω	I_D = 8 A, V_{GS} = 10 V *[1]
		—	0.13	0.18	Ω	I_D = 8 A, V_{GS} = 4 V *[1]
Forward transfer admittance	|yfs|	7	11	—	S	I_D = 8 A, V_{DS} = 10 V *[1]
Input capacitance	Ciss	—	860	—	pF	V_{DS} = 10 V, V_{GS} = 0,
Output capacitance	Coss	—	340	—	pF	f = 1 MHz
Reverse transfer capacitance	Crss	—	100	—	pF	
Turn-on delay time	$t_{d(on)}$	—	10	—	ns	I_D = 8 A, V_{GS} = 10 V,
Rise time	t_r	—	70	—	ns	R_L = 3.75 Ω
Turn-off delay time	$t_{d(off)}$	—	180	—	ns	
Fall time	t_f	—	100	—	ns	
Body to drain diode forward voltage	V_{DF}	—	1.3	—	V	I_F = 15 A, V_{GS} = 0
Body to drain diode reverse recovery time	t_{rr}	—	250	—	ns	I_F = 15 A, V_{GS} = 0, di_F/dt = 50 A/µs

Note: 1. Pulse test

See characteristic curves of 2SK1301.

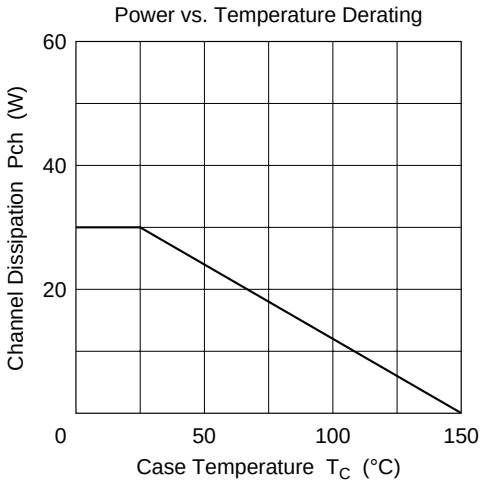
Power vs. Temperature Derating
Channel Dissipation Pch (W)
60
40
20
0
50
100
150
Case Temperature T_C (°C)

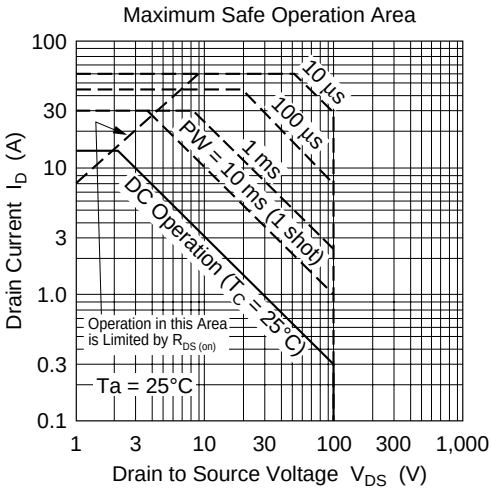
Maximum Safe Operation Area
Drain Current I_D (A)
100
30
10
3
1.0
0.3
0.1
1
3
10
30
100
300
1,000
Drain to Source Voltage V_{DS} (V)
10 µs
100 µs
1 ms
PW = 10 ms (1 shot)
DC Operation (T_C = 25°C)
Operation in this Area is Limited by $R_{DS (on)}$
Ta = 25°C

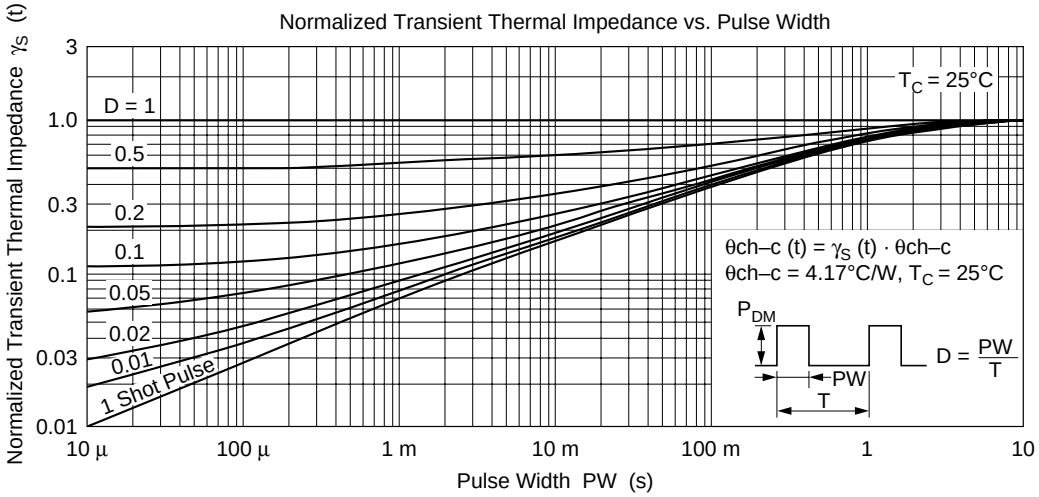
Normalized Transient Thermal Impedance vs. Pulse Width
Normalized Transient Thermal Impedance γ_S (t)
3
1.0
0.3
0.1
0.03
0.01
D = 1
0.5
0.2
0.1
0.05
0.02
0.01
1 Shot Pulse
T_C = 25°C
θch–c (t) = γ_S (t) · θch–c
θch–c = 4.17°C/W, T_C = 25°C
P_{DM}
PW
T
D = PW/T
10 µ
100 µ
1 m
10 m
100 m
1
10
Pulse Width PW (s)

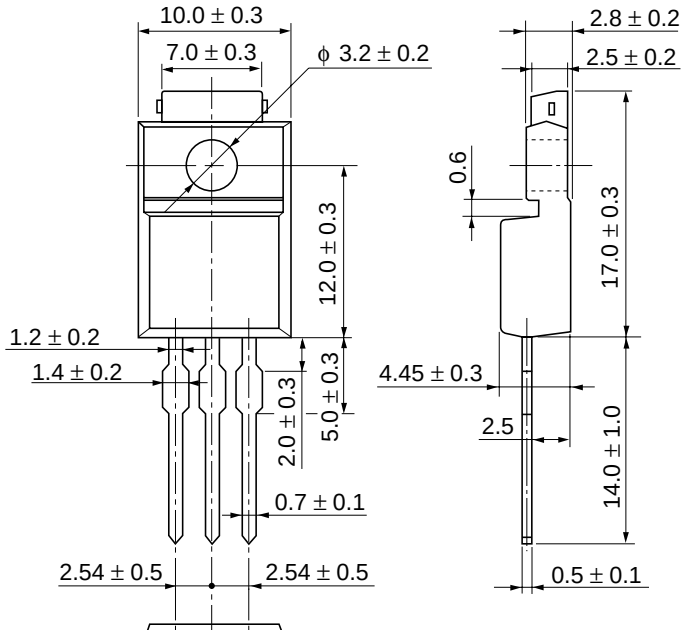
10.0 ± 0.3
7.0 ± 0.3
ϕ 3.2 ± 0.2
12.0 ± 0.3
1.2 ± 0.2
1.4 ± 0.2
2.0 ± 0.3
5.0 ± 0.3
0.7 ± 0.1
2.54 ± 0.5
2.54 ± 0.5
2.8 ± 0.2
2.5 ± 0.2
0.6
17.0 ± 0.3
4.45 ± 0.3
2.5
14.0 ± 1.0
0.5 ± 0.1

Unit: mm

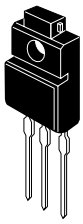

Cautions

1. Hitachi neither warrants nor grants licenses of any rights of Hitachi's or any third party's patent, copyright, trademark, or other intellectual property rights for information contained in this document. Hitachi bears no responsibility for problems that may arise with third party's rights, including intellectual property rights, in connection with use of the information contained in this document.
2. Products and product specifications may be subject to change without notice. Confirm that you have received the latest product standards or specifications before final design, purchase or use.
3. Hitachi makes every attempt to ensure that its products are of high quality and reliability. However, contact Hitachi's sales office before using the product in an application that demands especially high quality and reliability or where its failure or malfunction may directly threaten human life or cause risk of bodily injury, such as aerospace, aeronautics, nuclear power, combustion control, transportation, traffic, safety equipment or medical equipment for life support.
4. Design your application so that the product is used within the ranges guaranteed by Hitachi particularly for maximum rating, operating supply voltage range, heat radiation characteristics, installation conditions and other characteristics. Hitachi bears no responsibility for failure or damage when used beyond the guaranteed ranges. Even within the guaranteed ranges, consider normally foreseeable failure rates or failure modes in semiconductor devices and employ systemic measures such as fail-safes, so that the equipment incorporating Hitachi product does not cause bodily injury, fire or other consequential damage due to operation of the Hitachi product.
5. This product is not designed to be radiation resistant.
6. No one is permitted to reproduce or duplicate, in any form, the whole or part of this document without written approval from Hitachi.
7. Contact Hitachi's sales office for any questions regarding this document or Hitachi semiconductor products.

HITACHI

Hitachi, Ltd.
Semiconductor & Integrated Circuits.
Nippon Bldg., 2-6-2, Ohte-machi, Chiyoda-ku, Tokyo 100-0004, Japan
Tel: Tokyo (03) 3270-2111 Fax: (03) 3270-5109

URL	NorthAmerica	:	http:semiconductor.hitachi.com/
	Europe	:	http://www.hitachi-eu.com/hel/ecg
	Asia (Singapore)	:	http://www.has.hitachi.com.sg/grp3/sicd/index.htm
	Asia (Taiwan)	:	http://www.hitachi.com.tw/E/Product/SICD_Frame.htm
	Asia (HongKong)	:	http://www.hitachi.com.hk/eng/bo/grp3/index.htm
	Japan	:	http://www.hitachi.co.jp/Sicd/indx.htm

For further information write to:

Hitachi Semiconductor
(America) Inc.
179 East Tasman Drive,
San Jose,CA 95134
Tel: <1> (408) 433-1990
Fax: <1>(408) 433-0223

Hitachi Europe GmbH
Electronic components Group
Dornacher Stra§e 3
D-85622 Feldkirchen, Munich
Germany
Tel: <49> (89) 9 9180-0
Fax: <49> (89) 9 29 30 00

Hitachi Europe Ltd.
Electronic Components Group.
Whitebrook Park
Lower Cookham Road
Maidenhead
Berkshire SL6 8YA, United Kingdom
Tel: <44> (1628) 585000
Fax: <44> (1628) 778322

Hitachi Asia Pte. Ltd.
16 Collyer Quay #20-00
Hitachi Tower
Singapore 049318
Tel: 535-2100
Fax: 535-1533

Hitachi Asia Ltd.
Taipei Branch Office
3F, Hung Kuo Building. No.167,
Tun-Hwa North Road, Taipei (105)
Tel: <886> (2) 2718-3666
Fax: <886> (2) 2718-8180

Hitachi Asia (Hong Kong) Ltd.
Group III (Electronic Components)
7/F., North Tower, World Finance Centre,
Harbour City, Canton Road, Tsim Sha Tsui,
Kowloon, Hong Kong
Tel: <852> (2) 735 9218
Fax: <852> (2) 730 0281
Telex: 40815 HITEC HX

Copyright ' Hitachi, Ltd., 1999. All rights reserved. Printed in Japan.