查询TC74HC03AF供应商 捷多邦，专业PCB打样工厂，24小时加急出货

TOSHIBA CMOS DIGITAL INTEGRATED CIRCUIT SILICON MONOLITHIC

TC74HC03AP, TC74HC03AF, TC74HC03AFN

QUAD 2 – INPUT NAND GATE (OPEN DRAIN)

The TC74HC03A is a high speed CMOS 2-INPUT NAND GATE fabricated with silicon gate C2MOS technology.
It achieves the high speed operation similar to equivalent LSTTL while maintaining the CMOS low power dissipation.
Pin configuration and function are the same as the TC74HC00A. But the TC74HC03A has, as its outputs, high performance MOS N-channel transistors. (OPEN-DRAIN outputs)This device can, thefore, with a suitable pull-up resistors, be used in wired-AND, LED driver and other application.
All inputs are equipped with protection circuits against static discharge or transient excess voltage.

FEATURES :

- High Speed ····· t_{pz} = 5ns(typ.) at V_{CC} = 5V
- Low Power Dissipation ····· I_{CC} = 1 μA(Max.) at Ta = 25°C
- High Noise Immunity ····· V_{NIH} = V_{NIL} = 28% V_{CC} (Min.)
- Output Drive Capability ····· 10 LSTTL Loads
- Wide Operating Voltage Range ···· V_{CC} (opr.) = 2V ~ 6V
- Open Drain Structure
- Pin and Function Compatible with 74LS03

(Note) The JEDEC SOP (FN) is not available in Japan.

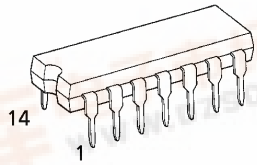

P (DIP14-P-300-2.54)
Weight : 0.96g (Typ.)

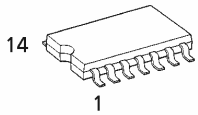

F (SOP14-P-300-1.27)
Weight : 0.18g (Typ.)

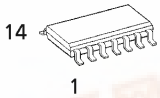

FN (SOL14-P-150-1.27)
Weight : 0.12g (Typ.)

SYSTEM DIAGRAM (per gate)

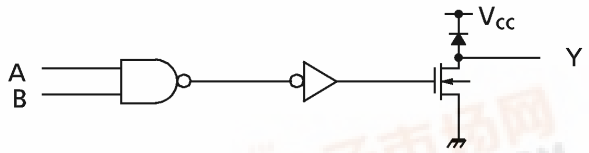

PIN ASSIGNMENT

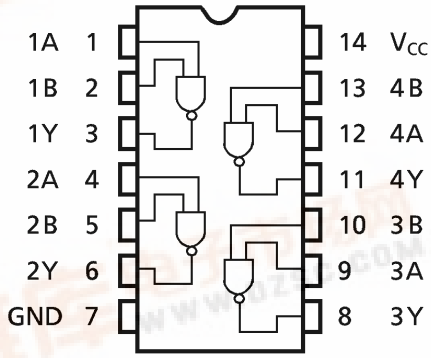

(TOP VIEW)

IEC LOGIC SYMBOL

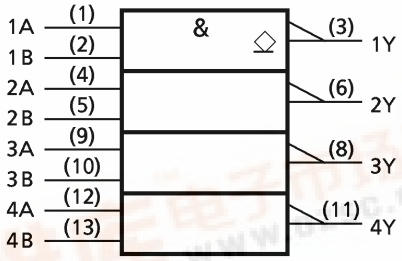

TRUTH TABLE

A	B	Y
L	L	Z
L	H	Z
H	L	Z
H	H	L

Z : High Impedance

找PDF 维库一下 pdf.dzsc.com

ABSOLUTE MAXIMUM RATINGS

PARAMETER	SYMBOL	VALUE	UNIT
Supply Voltage Range	V_{CC}	−0.5~7	V
DC Input Voltage	V_{IN}	−0.5~V_{CC}+0.5	V
DC Output Voltage	V_{OUT}	−0.5~V_{CC}+0.5	V
Input Diode Current	I_{IK}	±20	mA
Output Diode Current	I_{OK}	±20	mA
DC Output Current	I_{OUT}	+25	mA
DC V_{CC} / Ground Current	I_{CC}	±50	mA
Power Dissipation	P_D	500 (DIP)* / 180 (SOP)	mW
Storage Temperature	T_{stg}	−65~150	°C

*500mW in the range of Ta=−40°C~65°C. From Ta=65°C to 85 °C a derating factor of −10mW/ °C shall be applied until 300mW.

RECOMMENDED OPERATING CONDITIONS

PARAMETER	SYMBOL	VALUE	UNIT
Supply Voltage	V_{CC}	2~6	V
Input Voltage	V_{IN}	0~V_{CC}	V
Output Voltage	V_{OUT}	0~V_{CC}	V
Operating Temperature	T_{opr}	−40~85	°C
Input Rise and Fall Time	t_r, t_f	0~ 1000 (V_{CC} = 2.0V) 0~ 500 (V_{CC} = 4.5V) 0~ 400 (V_{CC} = 6.0V)	ns

DC ELECTRICAL CHARACTERISTICS

PARAMETER	SYMBOL	TEST CONDITION		V_{CC} (V)	Ta = 25°C MIN.	Ta = 25°C TYP.	Ta = 25°C MAX.	Ta = −40~85°C MIN.	Ta = −40~85°C MAX.	UNIT
High - Level Input Voltage	V_{IH}			2.0 4.5 6.0	1.50 3.15 4.20	— — —	— — —	1.50 3.15 4.20	— — —	V
Low - Level Input Voltage	V_{IL}			2.0 4.5 6.0	— — —	— — —	0.50 1.35 1.80	— — —	0.50 1.35 1.80	V
Low - Level Output Voltage	V_{OL}	V_{IN} = V_{IH} or V_{IL}	I_{OL} = 20μA	2.0 4.5 6.0	— — —	0.0 0.0 0.0	0.1 0.1 0.1	— — —	0.1 0.1 0.1	V
			I_{OL} = 4 mA I_{OL} = 5.2mA	4.5 6.0	— —	0.17 0.18	0.26 0.26	— —	0.33 0.33	
Output Off - State Current	I_{OZ}	V_{IN} = V_{IH} or V_{IL} V_{OUT} = V_{CC}		6.0	—	—	±0.5	—	±5.0	μA
Input Leakage Current	I_{IN}	V_{IN} = V_{CC} or GND		6.0	—	—	±0.1	—	±1.0	
Quiescent Supply Current	I_{CC}	V_{IN} = V_{CC} or GND		6.0	—	—	1.0	—	10.0	

AC ELECTRICAL CHARACTERISTICS (C_L = 15pF, V_{CC} = 5V, Ta = 25°C, Input $t_r = t_f$ = 6ns)

PARAMETER	SYMBOL	TEST CONDITION	MIN.	TYP.	MAX.	UNIT
Output Transition Time	t_{THL}		—	4	8	ns
Propagation Delay Time	t_{pLZ}	R_L = 1kΩ	—	5	12	
Propagation Delay Time	t_{pZL}	R_L = 1kΩ	—	5	12	

AC ELECTRICAL CHARACTERISTICS (C_L = 50pF, Input $t_r = t_f$ = 6ns)

PARAMETER	SYMBOL	TEST CONDITION	V_{CC} (V)	Ta = 25°C MIN.	Ta = 25°C TYP.	Ta = 25°C MAX.	Ta = −40~85°C MIN.	Ta = −40~85°C MAX.	UNIT
Output Transition Time	t_{THL}		2.0	—	30	75	—	95	ns
			4.5	—	8	15	—	19	
			6.0	—	7	13	—	16	
Propagation Delay Time	t_{pLZ}	R_L = 1kΩ	2.0	—	20	75	—	95	
			4.5	—	10	15	—	19	
			6.0	—	9	13	—	16	
Propagation Delay Time	t_{pZL}	R_L = 1kΩ	2.0	—	24	75	—	95	
			4.5	—	8	15	—	19	
			6.0	—	7	13	—	16	
Input Capacitance	C_{IN}			—	5	10	—	10	pF
Output Capacitance	C_{OUT}			—	3	—	—	—	
Power Dissipation Capacitance	C_{PD} (1)			—	5	—	—	—	

Note (1) C_{PD} is defined as the value of the internal equivalent capacitance which is calculated from the operating current consumption without load.
Average operating current can be obtained by the equation :

$$I_{CC}(opr) = C_{PD} \cdot V_{CC} \cdot f_{IN} + I_{CC} / 4 \text{ (per Gate)}$$

DIP 14PIN PACKAGE DIMENSIONS (DIP14-P-300-2.54) Unit in mm

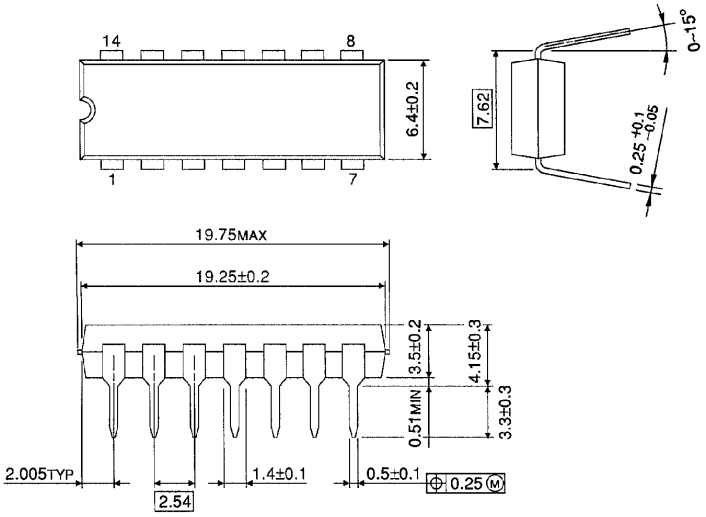

Weight : 0.96g (Typ.)

SOP 14PIN (200mil BODY) PACKAGE DIMENSIONS (SOP14-P-300-1.27) Unit in mm

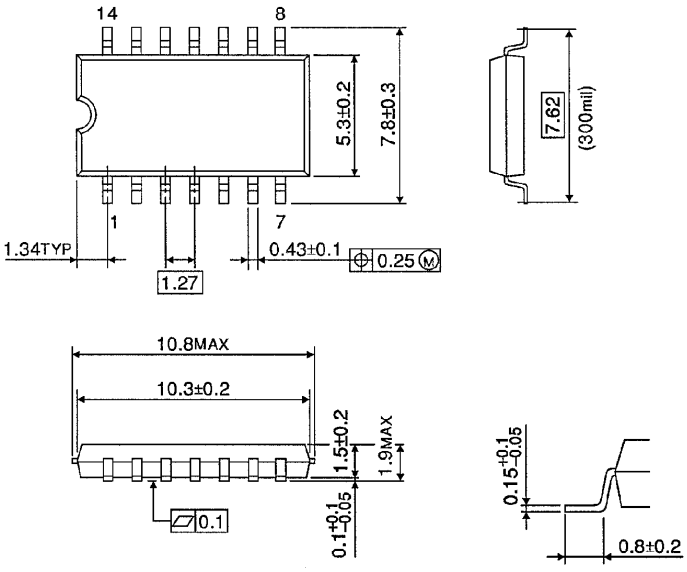

Weight : 0.18g (Typ.)

SOP 14PIN (150mil BODY) PACKAGE DIMENSIONS (SOL14-P-150 -1.27) Unit in mm

(Note) This package is not available in Japan.

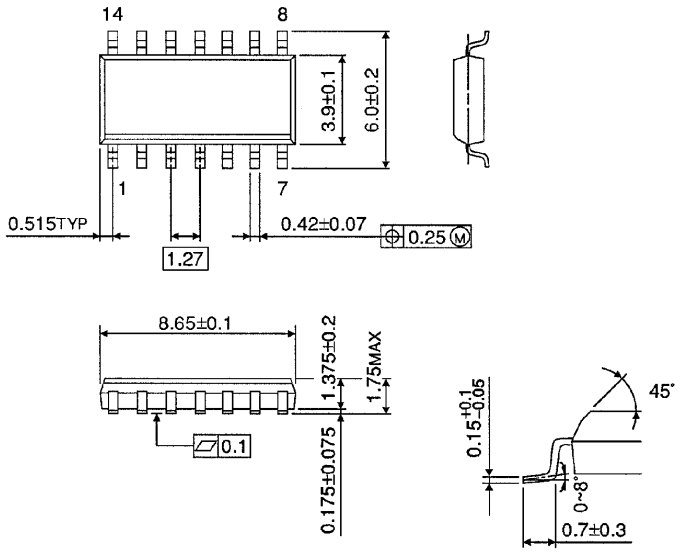

Weight : 0.12g (Typ.)

RESTRICTIONS ON PRODUCT USE

000707EBA

- TOSHIBA is continually working to improve the quality and reliability of its products. Nevertheless, semiconductor devices in general can malfunction or fail due to their inherent electrical sensitivity and vulnerability to physical stress. It is the responsibility of the buyer, when utilizing TOSHIBA products, to comply with the standards of safety in making a safe design for the entire system, and to avoid situations in which a malfunction or failure of such TOSHIBA products could cause loss of human life, bodily injury or damage to property.
  In developing your designs, please ensure that TOSHIBA products are used within specified operating ranges as set forth in the most recent TOSHIBA products specifications. Also, please keep in mind the precautions and conditions set forth in the "Handling Guide for Semiconductor Devices," or "TOSHIBA Semiconductor Reliability Handbook" etc..
- The TOSHIBA products listed in this document are intended for usage in general electronics applications (computer, personal equipment, office equipment, measuring equipment, industrial robotics, domestic appliances, etc.). These TOSHIBA products are neither intended nor warranted for usage in equipment that requires extraordinarily high quality and/or reliability or a malfunction or failure of which may cause loss of human life or bodily injury ("Unintended Usage"). Unintended Usage include atomic energy control instruments, airplane or spaceship instruments, transportation instruments, traffic signal instruments, combustion control instruments, medical instruments, all types of safety devices, etc.. Unintended Usage of TOSHIBA products listed in this document shall be made at the customer's own risk.
- The products described in this document are subject to the foreign exchange and foreign trade laws.
- The information contained herein is presented only as a guide for the applications of our products. No responsibility is assumed by TOSHIBA CORPORATION for any infringements of intellectual property or other rights of the third parties which may result from its use. No license is granted by implication or otherwise under any intellectual property or other rights of TOSHIBA CORPORATION or others.
- The information contained herein is subject to change without notice.