查询4503供应商 捷多邦，专业PCB打样工厂，24小时加急出货

R/2R RESISTOR LADDER NETWORKS

■ Dimensions

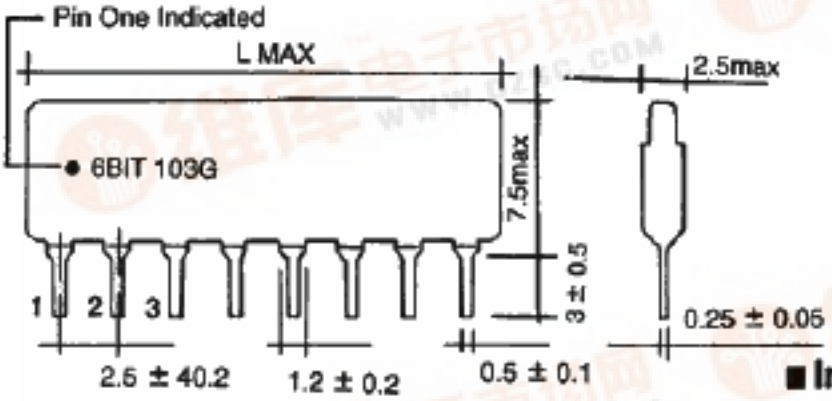

■ Internal Circuit

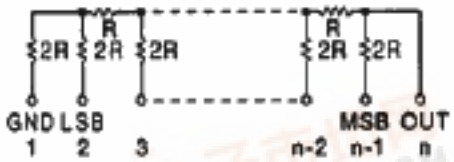

NO. of Pins	6	7	8	9	10	11	12
NO. of Bits	4	5	6	7	8	9	10
Lmax. (mm)	15.3	17.8	20.4	22.9	25.4	28.0	30.5

■ Specifications

Item	Ratings
Rated power	30mW/Element
Maximum-working voltage	20V
Operating Temperature range	-55°C to +125°C
Standard resistance value	R: 5KΩ, 10KΩ, 25KΩ, 50KΩ, 100KΩ
Output impedance tolerance	G: ±2%, J: ±5%
Bits errors	±1/2LSBmax.
FSA	±3.12%max(4Bit) ± 1.56% max(5Bit) ±0.78%max(6Bit) ± 0.39% max(7Bit) ±0.20%max(8Bit)
T.C.OF Output impedance	0 ± 200ppm/°C ,Tracking± 50ppm/°C
T.C.of bit voltage	0 ± 30ppm/°C

■ Applications

R/2R Ladder Networks for D/A and A/D converter with bi-polar or CMOS switches

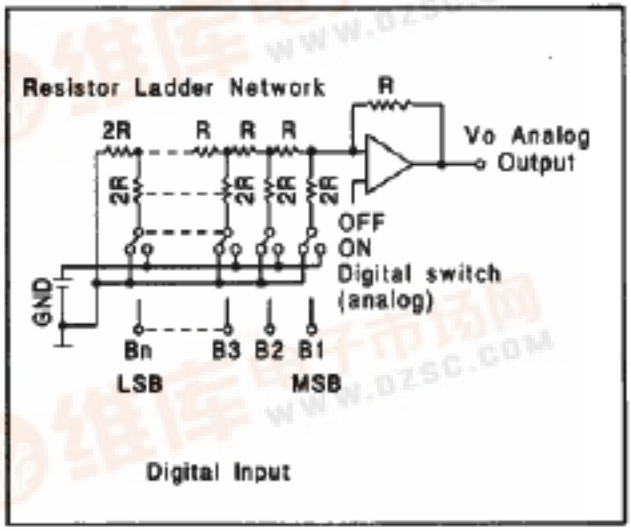

■ Output Impedance Test Circuit

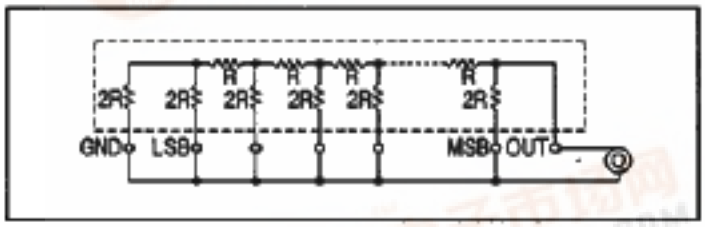

■ Part No And Test Circuit

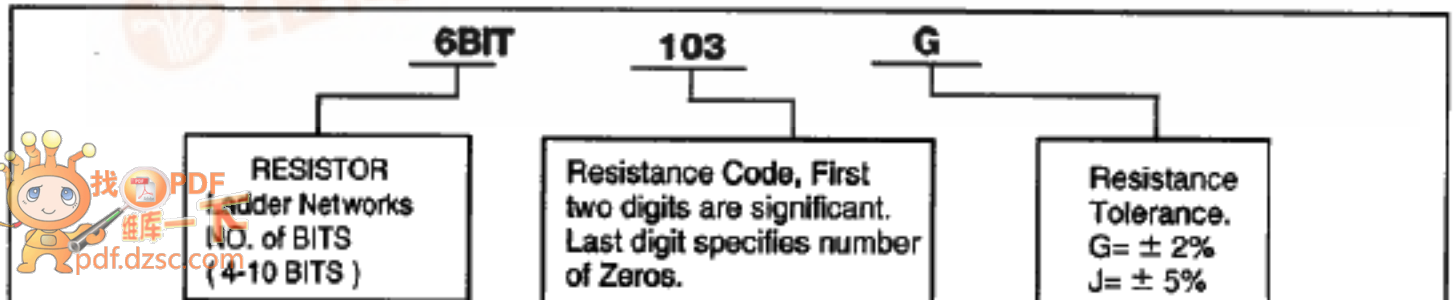

找PDF 维库一下 pdf.dzsc.com