Micro Commercial Components
21201 Itasca Street Chatsworth
CA 91311
Phone: (818) 701-4933
Fax: (818) 701-4939

BZX84C2V4W THRU BZX84C39W

Silicon 200 mWatt Zener Diodes

Features

- Planar Die construction
- 200mW Power Dissipation
- Zener Voltages from 2.4V - 39V
- Ideally Suited for Automated Assembly Processes

.

Mechanical Data

- Case: SOT-23, Plastic
- Terminals: solderable per MIL-STD-202, Methode 208
- Weight: 0.008 grams (approx.)

Maximum Ratings @ 25°C Unless Otherwise Specified

Zener Current	I_F	**100**	**mA**
Maximum Forward Voltage	V_F	**1.2**	**V**
Power Dissipation (Note 1)	$P_{(AV)}$	**200**	**mWatt**
Operation And Storage Temperature	T_J, T_{STG}	**-55°C to +150°C**	
Peak Foreard Surge Current 8.3mS half	I_{FSM}	**2.0**	**A**

NOTES:
A. Mounted on 5.0mm2(.013mm thick) land areas.
B. Measured on 8.3ms, single half sine-wave or equivalent square wave, duty cycle = 4 pulses per minute maximum.

SOT-323

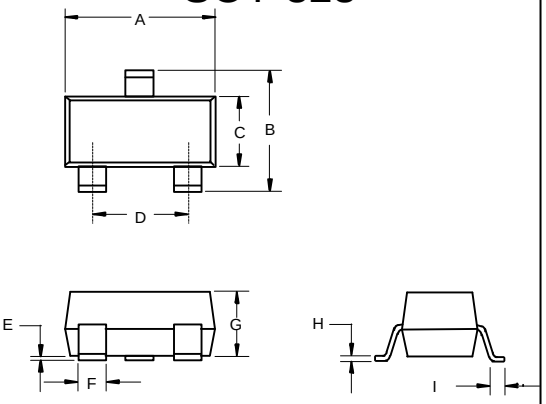

DIMENSIONS					
	INCHES		MM		
DIM	MIN	MAX	MIN	MAX	NOTE
A	.070	.087	1.80	2.20	
B	.078	.087	2.00	2.20	
C	.045	.054	1.15	1.35	
D	.047	.056	1.20	1.40	
E	---	.004	---	.10	
F	.0078	.0160	.20	.40	
G	.035	.044	.90	1.10	
H	.002	.006	.05	.15	
I	.010	---	.25	---	

Suggested Solder Pad Layout

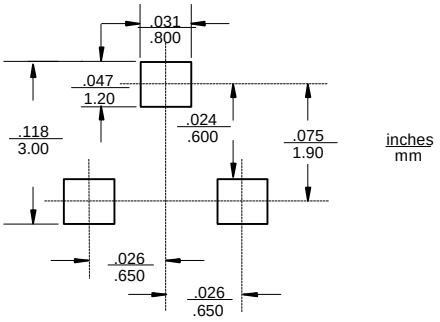

BZX84C2V4W thru BZX84C39W

ELECTRICAL CHARACTERISTICS (TA=25 degree C unless otherwise noted) VF=1.2V max, IF=100mA for all ty

Type Nimber	Marking Code	Nominal Zener Voltage			Max. Zener Impedance				Max.Reverse Leakage Current	
		Vz @ I_{ZT}			Z_{ZT} @ I_{ZT}		Z_{ZK} @ I_{ZK}		I_R @ V_R	
		Nom. V	Min. V	Max. V	Ohm	mA	Ohm	mA	uA	V
BZX84C2V4W	W1	2.4	2.28	2.52	100	5	600	1	50	1
BZX84C2V7W	W2	2.7	2.5	2.9	100	5	600	1	20	1
BZX84C3W	W3	3	2.8	3.2	95	5	600	1	10	1
BZX84C3V3W	W4	3.3	3.1	3.5	95	5	600	1	5.0	1
BZX84C3V6W	W5	3.6	3.4	3.8	90	5	600	1	5.0	1
BZX84C3V9W	W6	3.9	3.7	4.1	90	5	600	1	3.0	1
BZX84C4V3W	W7	4.3	4	4.6	90	5	600	1	3.0	1
BZX84C4V7W	W8	4.7	4.4	5	80	5	500	1	3.0	2
BZX84C5V1W	W9	5.1	4.8	5.4	60	5	480	1	2.0	2.0
BZX84C5V6W	WA	5.6	5.2	6	40	5	400	1	1.0	2.0
BZX84C6V2W	WB	6.2	5.8	6.6	10	5	150	1	3.0	4.0
BZX84C6V8W	WC	6.8	6.4	7.2	15	5	80	1	2.0	4.0
BZX84C7V5W	WD	7.5	7	7.9	15	5	80	1	1.0	5
BZX84C8V2W	WE	8.2	7.7	8.7	15	5	80	1	0.7	5
BZX84C9V1W	WF	9.1	8.5	9.6	15	5	100	1	0.5	6
BZX84C10W	WG	10	9.4	10.6	20	5	150	1	0.2	7.0
BZX84C11W	WH	11	10.4	11.6	20	5	150	1	0.1	8.0
BZX84C12W	WI	12	11.4	12.7	25	5	150	1	0.1	8.0
BZX84C13W	WK	13	12.4	14.1	30	5	170	1	0.1	8.0
BZX84C15W	WL	15	13.8	15.6	30	5	200	1	0.1	10.5
BZX84C16W	WM	16	15.3	17.1	40	5	200	1	0.1	11.2
BZX84C18W	WN	18	16.8	19.1	45	5	225	1	0.1	12.6
BZX84C20W	WO	20	18.8	21.2	55	5	225	1	0.1	14.0
BZX84C22W	WP	22	20.8	23.3	55	5	250	1	0.1	15.4
BZX84C24W	WR	24	22.8	25.6	70	5	250	1	0.1	16.8
BZX84C27W	WS	27	25.1	28.9	80	5	300	1	0.1	18.9
BZX84C30W	WT	30	28	32	80	5	300	1	0.1	21.0
BZX84C33W	WU	33	31	35	80	5	325	1	0.1	23.1
BZX84C36W	WW	36	34	38	90	5	350	1	0.1	25.2
BZX84C39W	WX	39	37	41	130	5	350	1	0.1	27.3

NOTE:

1. Tolerance and Type Number Designation. The type numbers listed have a standard tolerance on the nominal zener voltage of ±5%.
2. Specials Available Include:
   A. Nominal zener voltages between the voltages shown and tighter voltage tolerances.
   B. Matched sets.
3. Zener Voltage (V_Z) Measurement. Guarantees the zener voltage when measured at 90 seconds while maintaining the lead temperature (T_L) at 30°C, from the diode body.
4. Zener Impedance (Z_Z) Derivation. The zener impedance is derived from the 60 cycle ac voltage, which results when an AC current having an rms value equal to 10% of the dc zener current (I_{ZT} or I_{ZK}) is superimposed on I_{ZT} or I_{ZK}.
5. Surge Current (I_R) Non-Repetitive. The rating listed in the electrical characteristics table is maximum peak, non-repetitive, reverse surge current of 1/2 square wave or equivalent sine wave pulse of 1/120 second duration superimposed on the test current, I_{ZT}, per JEDEC registration; however, actual device capability is as described in Figure 5.

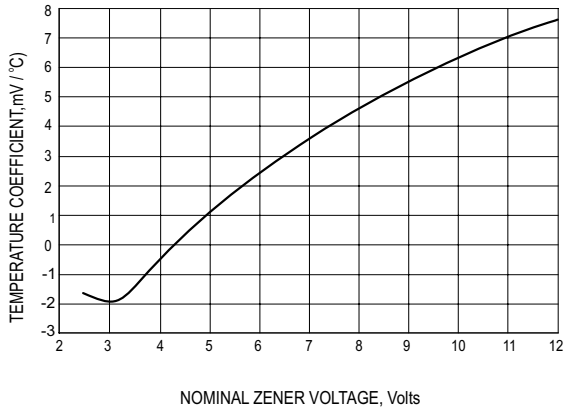

TYPICAL REVERSE CURRENT

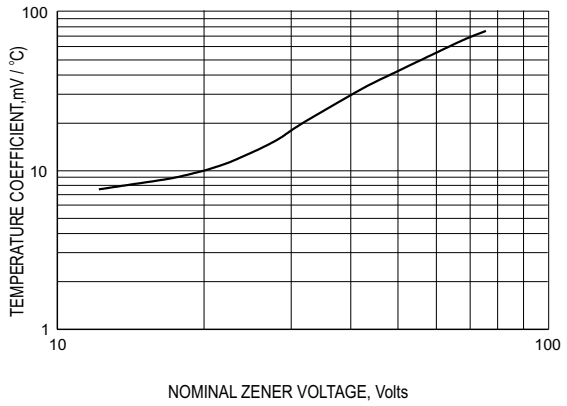

STEADY STATE POWER DERATING

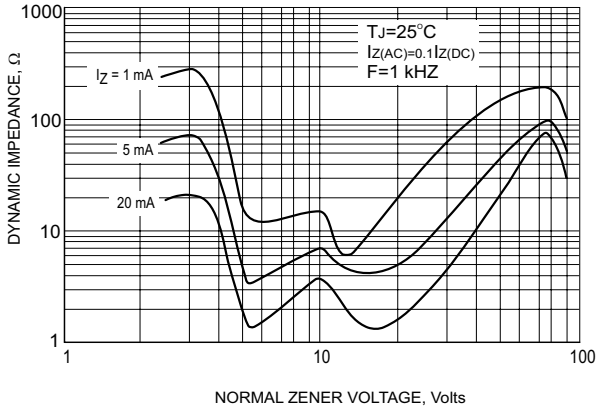

EFFECT OF ZENER VOLTAGE ON ZENER IMPEDANCE

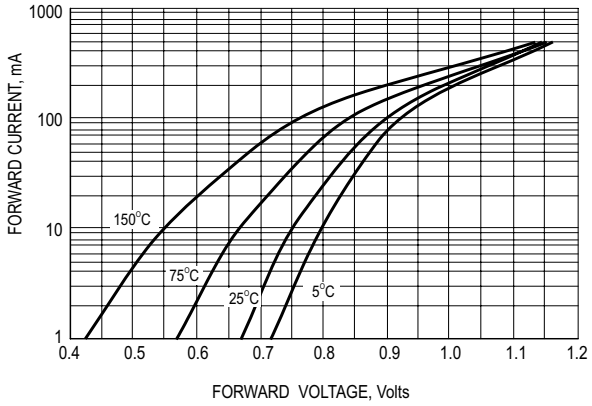

TYPICAL FORWARD VOLTAGE

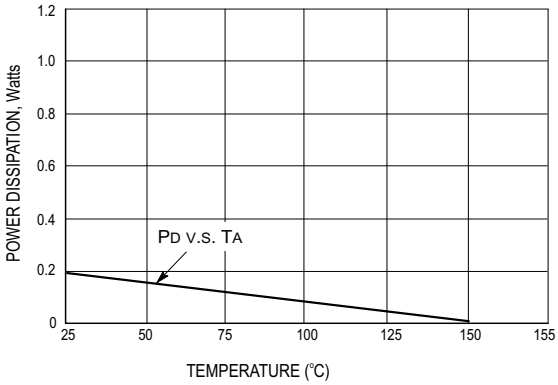

STEADY STATE POWER DERATING

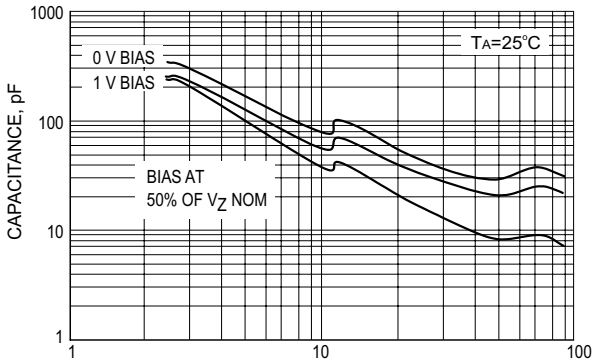

NOMINAL ZENER VOLTAGE, Volts

TYPICAL CAPACITANCE

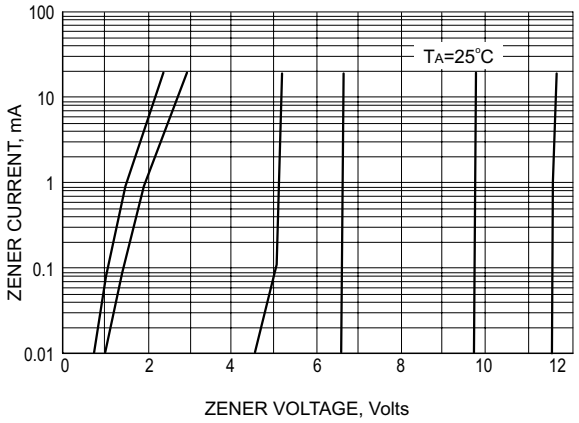

ZENER VOLTAGE V.S. ZENER CURRENT

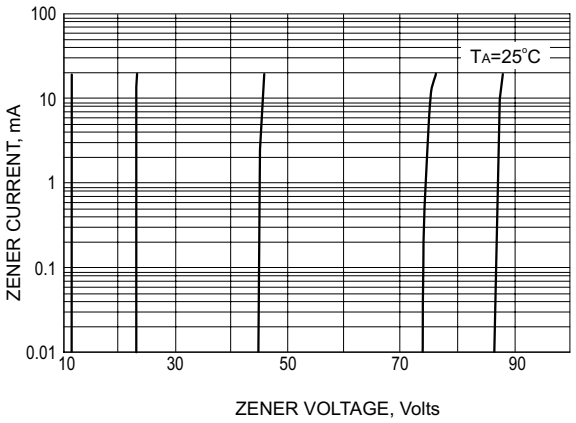

ZENER VOLTAGE V.S. ZENER CURRENT

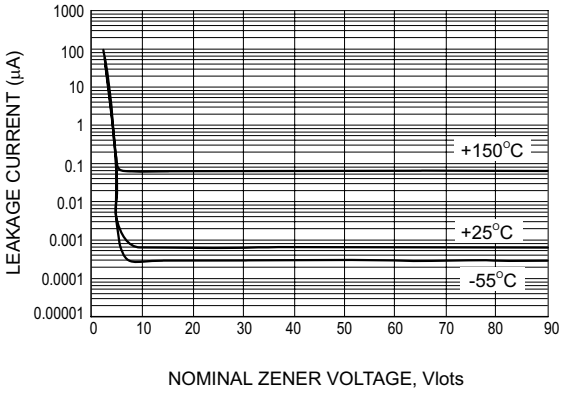

TYPICAL LEAKGE CURRENT

WWW.ALLDATASHEET.COM

Copyright © Each Manufacturing Company.

All Datasheets cannot be modified without permission.

This datasheet has been download from :

www.AllDataSheet.com

100% Free DataSheet Search Site.

Free Download.

No Register.

Fast Search System.

www.AllDataSheet.com