Data sheet acquired from Harris Semiconductor
SCHS126

February 1998

CD74HC03, CD74HCT03

High Speed CMOS Logic Quad 2-Input NAND Gate with Open Drain

Features

- **Buffered Inputs**
- **Typical Propagation Delay: 8ns at V_{CC} = 5V, C_L = 15pF, T_A = 25^oC**
- **Output Pull-up to 10V**
- **Fanout (Over Temperature Range)**
  - **Standard Outputs . . . . . 10 LSTTL Loads**
  - **Bus Driver Outputs . . . . . 15 LSTTL Loads**
- **Wide Operating Temperature Range . . . -55^oC to 125^oC**
- **Balanced Propagation Delay and Transition Times**
- **Significant Power Reduction Compared to LSTTL Logic ICs**
- **HC Types**
  - **2V to 6V Operation**
  - **High Noise Immunity: N_{IL} = 30%, N_{IH} = 30% of V_{CC} at V_{CC} = 5V**
- **HCT Types**
  - **4.5V to 5.5V Operation**
  - **Direct LSTTL Input Logic Compatibility, V_{IL}= 0.8V (Max), V_{IH} = 2V (Min)**
  - **CMOS Input Compatibility, $I_I \leq 1\mu A$ at V_{OL}, V_{OH}**

Description

The Harris CD74HC03 and CD74HCT03 logic gates utilize silicon gate CMOS technology to achieve operating speeds similar to LSTTL gates with the low power consumption of standard CMOS integrated circuits. All devices have the ability to drive 10 LSTTL loads. The 74HCT logic family is functionally as well as pin compatible with the standard 74LS logic family.

These open drain NAND gates can drive into resistive loads to output voltages as high as 10V. Minimum values of R_L required verses load voltage are shown in Figure 2.

Ordering Information

PART NUMBER	TEMP. RANGE (^oC)	PACKAGE	PKG. NO.
CD74HC03E	-55 to 125	14 Ld PDIP	E14.3
CD74HCT03E	-55 to 125	14 Ld PDIP	E14.3
CD74HC03M	-55 to 125	14 Ld SOIC	M14.15
CD74HCT03M	-55 to 125	14 Ld SOIC	M14.15

NOTES:

1. When ordering, use the entire part number. Add the suffix 96 to obtain the variant in the tape and reel.
2. Wafer and die for this part number is available which meets all electrical specifications. Please contact your local sales office or Harris customer service for ordering information.

Pinout

CD74HC03, CD74HCT03
(PDIP, SOIC)
TOP VIEW

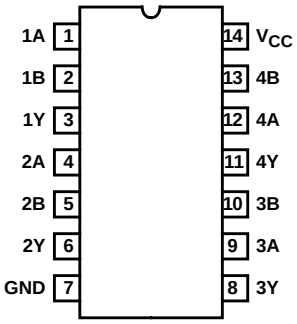

CAUTION: These devices are sensitive to electrostatic discharge. Users should follow proper IC Handling Procedures.

Copyright © Harris Corporation 1998

File Number **1832.1**

Functional Diagram

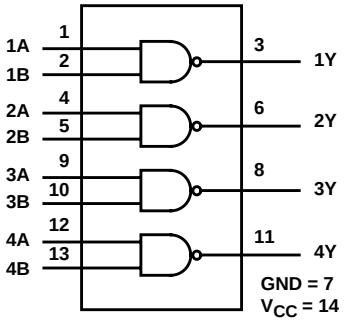

TRUTH TABLE

A	B	Y	
L	L	Z (Note 4)	H (Note 3)
H	L	Z (Note 4)	H (Note 3)
L	H	Z (Note 4)	H (Note 3)
H	H	L	L

NOTES:

3. Requires pull-up (R_L to V_L)
4. Without pull-up (high impedance)

Logic Symbol

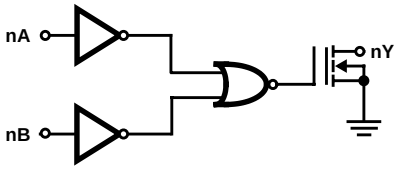

Absolute Maximum Ratings

DC Supply Voltage, V_{CC} . . . . . -0.5V to 7V
DC Input Diode Current, I_{IK}
For V_I < -0.5V or V_I > V_{CC} + 0.5V . . . . . ±20mA
DC Output Diode Current, I_{OK}
For V_O < -0.5V or V_O > V_{CC} + 0.5V . . . . . ±20mA
DC Output Source or Sink Current per Output Pin, I_O
For V_O > -0.5V or V_O < V_{CC} + 0.5V . . . . . ±25mA
DC Drain Current, per Output, I_O
For -0.5V < V_O . . . . . -25mA
DC V_{CC} or Ground Current, I_{CC} or I_{GND} . . . . . ±50mA

Operating Conditions

Temperature Range (T_A) . . . . . -55°C to 125°C
Supply Voltage Range, V_{CC}
HC Types . . . . . 2V to 6V
HCT Types . . . . . 4.5V to 5.5V
DC Input or Output Voltage, V_I, V_O . . . . . 0V to V_{CC}
Input Rise and Fall Time
2V . . . . . 1000ns (Max)
4.5V. . . . . 500ns (Max)
6V . . . . . 400ns (Max)

Thermal Information

Thermal Resistance (Typical, Note 5) θ_{JA} (°C/W)
PDIP Package 90
SOIC Package 175
Maximum Junction Temperature (Hermetic Package or Die) . . . 175°C
Maximum Junction Temperature (Plastic Package) . . . . . 150°C
Maximum Storage Temperature Range . . . . . -65°C to 150°C
Maximum Lead Temperature (Soldering 10s) . . . . . 300°C
(SOIC - Lead Tips Only)

CAUTION: Stresses above those listed in "Absolute Maximum Ratings" may cause permanent damage to the device. This is a stress only rating and operation of the device at these or any other conditions above those indicated in the operational sections of this specification is not implied.

NOTE:

5. θ_{JA} is measured with the component mounted on an evaluation PC board in free air.

DC Electrical Specifications

PARAMETER	SYMBOL	TEST CONDITIONS V_I (V)	TEST CONDITIONS I_O (mA)	V_{CC} (V)	25°C MIN	25°C TYP	25°C MAX	-40°C TO 85°C MIN	-40°C TO 85°C MAX	-55°C TO 125°C MIN	-55°C TO 125°C MAX	UNITS
HC TYPES												
High Level Input Voltage	V_{IH}	-	-	2	1.5	-	-	1.5	-	1.5	-	V
				4.5	3.15	-	-	3.15	-	3.15	-	V
				6	4.2	-	-	4.2	-	4.2	-	V
Low Level Input Voltage	V_{IL}	-	-	2	-	-	0.5	-	0.5	-	0.5	V
				4.5	-	-	1.35	-	1.35	-	1.35	V
				6	-	-	1.8	-	1.8	-	1.8	V
Low Level Output Voltage CMOS Loads	V_{OL}	V_{IH} or V_{IL}	0.02	2	-	-	0.1	-	0.1	-	0.1	V
			0.02	4.5	-	-	0.1	-	0.1	-	0.1	V
			0.02	6	-	-	0.1	-	0.1	-	0.1	V
Low Level Output Voltage TTL Loads			-	-	-	-	-	-	-	-	-	V
			4	4.5	-	-	0.26	-	0.33	-	0.4	V
			5.2	6	-	-	0.26	-	0.33	-	0.4	V
Input Leakage Current	I_I	V_{CC} or GND	-	6	-	-	±0.1	-	±1	-	±1	µA
Quiescent Device Current	I_{CC}	V_{CC} or GND	0	6	-	-	2	-	20	-	40	µA
HCT TYPES												
High Level Input Voltage	V_{IH}	-	-	4.5 to 5.5	2	-	-	2	-	2	-	V
Low Level Input Voltage	V_{IL}	-	-	4.5 to 5.5	-	-	0.8	-	0.8	-	0.8	V

DC Electrical Specifications (Continued)

PARAMETER	SYMBOL	TEST CONDITIONS		V_{CC} (V)	25°C			-40°C TO 85°C		-55°C TO 125°C		UNITS
		V_I (V)	I_O (mA)		MIN	TYP	MAX	MIN	MAX	MIN	MAX	
Low Level Output Voltage CMOS Loads	V_{OL}	V_{IH} or V_{IL}	0.02	4.5	-	-	0.1	-	0.1	-	0.1	V
Low Level Output Voltage TTL Loads				4.5	-	-	0.26	-	0.33	-	0.4	V
Input Leakage Current	I_I	V_{CC} and GND	4	5.5	-		±0.1	-	±1	-	±1	µA
Quiescent Device Current	I_{CC}	V_{CC} or GND	0	5.5	-	-	2	-	20	-	40	µA
Additional Quiescent Device Current Per Input Pin: 1 Unit Load	ΔI_{CC} (Note 6)	V_{CC} - 2.1	-	4.5 to 5.5	-	100	360	-	450	-	490	µA

NOTE:

6. For dual-supply systems theoretical worst case (V_I = 2.4V, V_{CC} = 5.5V) specification is 1.8mA.

HCT Input Loading Table

INPUT	UNIT LOADS
nA, nB	1

NOTE: Unit Load is ΔI_{CC} limit specified in DC Electrical Specifications table, e.g., 360µA max at 25°C.

Switching Specifications Input t_r, t_f = 6ns

PARAMETER	SYMBOL	TEST CONDITIONS	V_{CC} (V)	25°C			-40°C TO 85°C		-55°C TO 125°C		UNITS
				MIN	TYP	MAX	MIN	MAX	MIN	MAX	
HC TYPES											
Propagation Delay, Input to Output (Figure 1)	t_{PLH}, t_{PHL}	C_L = 50pF	2	-	-	100	-	125	-	150	ns
			4.5	-	-	20	-	25	-	30	ns
			6	-	-	17	-	21	-	26	ns
Propagation Delay, Data Input to Output Y	t_{PLH}, t_{PHL}	C_L = 15pF	5	-	8	-	-	-	-	-	ns
Transition Times (Figure 1)	t_{TLH}, t_{THL}	C_L = 50pF	2	-	-	75	-	95	18	110	ns
			4.5	-	-	15	-	19	-	22	ns
			6	-	-	13	-	16	-	19	ns
Input Capacitance	C_I	-	-	-	-	10	-	10	-	10	pF
Power Dissipation Capacitance (Notes 7, 8)	C_{PD}	-	5	-	6.4	-	-	-	-	-	pF
HCT TYPES											
Propagation Delay, Input to Output (Figure 1)	t_{PLH}, t_{PHL}	C_L = 50pF	4.5	-	-	24	-	30	-	36	ns
Propagation Delay, Data Input to Output Y	t_{PLH}, t_{PHL}	C_L = 15pF	5	-	9	-	-	-	-	-	ns
Transition Times (Figure 1)	t_{TLH}, t_{THL}	C_L = 50pF	4.5	-	-	15	-	19	-	22	ns
Input Capacitance	C_I	-	-	-	-	10	-	10	-	10	pF

Switching Specifications Input t_r, t_f = 6ns **(Continued)**

PARAMETER	SYMBOL	TEST CONDITIONS	V_{CC} (V)	25°C			-40°C TO 85°C		-55°C TO 125°C		UNITS
				MIN	TYP	MAX	MIN	MAX	MIN	MAX	
Power Dissipation Capacitance (Notes 7, 8)	C_{PD}	-	5	-	9	-	-	-	-	-	pF

NOTES:

7. C_{PD} is used to determine the dynamic power consumption, per gate.
8. $P_D = C_{PD} V_{CC}^2 f_i + \Sigma (C_L V_{CC}^2 f_o) + \Sigma (V_L^2/R_L)$ (Duty Factor "Low")
   where f_i = input frequency, f_o = output frequency, C_L = output load capacitance, V_{CC} = supply voltage, Duty Factor "Low" = percent of time output is "low", V_L = output voltage, R_L = pull-up resistor.

Test Circuits and Waveforms

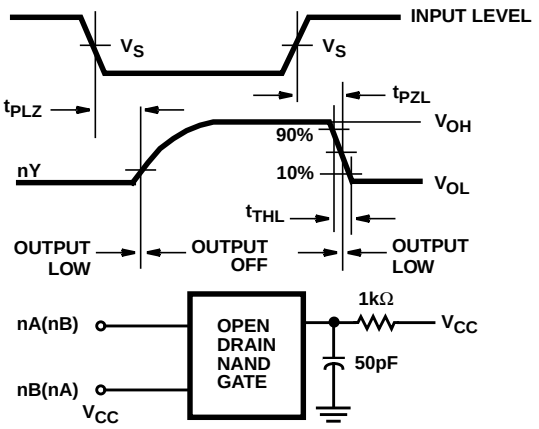

FIGURE 1. TRANSITION TIMES, PROPAGATION DELAY TIMES, AND TEST CIRCUIT

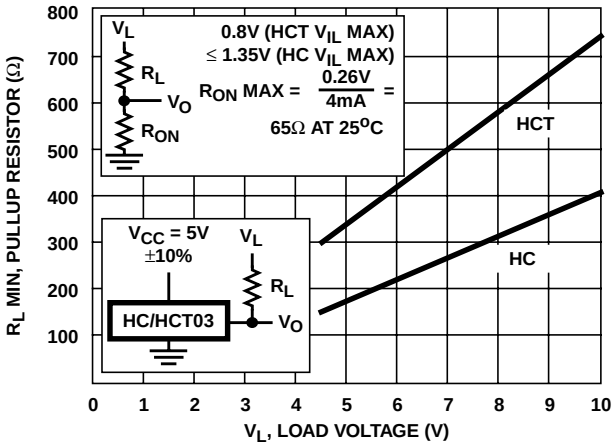

FIGURE 2. MINIMUM RESISTIVE LOAD vs LOAD VOLTAGE

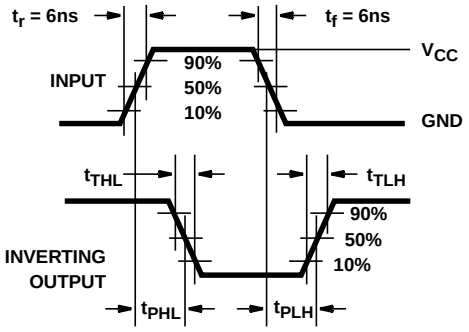

FIGURE 3. HC AND HCU TRANSITION TIMES AND PROPAGATION DELAY TIMES, COMBINATION LOGIC

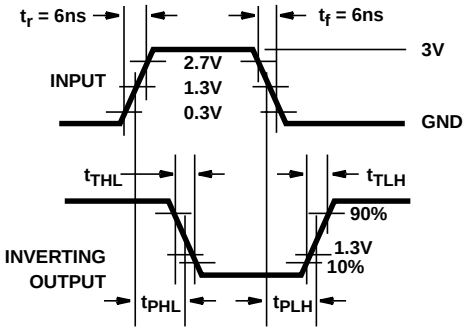

FIGURE 4. HCT TRANSITION TIMES AND PROPAGATION DELAY TIMES, COMBINATION LOGIC

IMPORTANT NOTICE

Texas Instruments and its subsidiaries (TI) reserve the right to make changes to their products or to discontinue any product or service without notice, and advise customers to obtain the latest version of relevant information to verify, before placing orders, that information being relied on is current and complete. All products are sold subject to the terms and conditions of sale supplied at the time of order acknowledgement, including those pertaining to warranty, patent infringement, and limitation of liability.

TI warrants performance of its semiconductor products to the specifications applicable at the time of sale in accordance with TI's standard warranty. Testing and other quality control techniques are utilized to the extent TI deems necessary to support this warranty. Specific testing of all parameters of each device is not necessarily performed, except those mandated by government requirements.

CERTAIN APPLICATIONS USING SEMICONDUCTOR PRODUCTS MAY INVOLVE POTENTIAL RISKS OF DEATH, PERSONAL INJURY, OR SEVERE PROPERTY OR ENVIRONMENTAL DAMAGE ("CRITICAL APPLICATIONS"). TI SEMICONDUCTOR PRODUCTS ARE NOT DESIGNED, AUTHORIZED, OR WARRANTED TO BE SUITABLE FOR USE IN LIFE-SUPPORT DEVICES OR SYSTEMS OR OTHER CRITICAL APPLICATIONS. INCLUSION OF TI PRODUCTS IN SUCH APPLICATIONS IS UNDERSTOOD TO BE FULLY AT THE CUSTOMER'S RISK.

In order to minimize risks associated with the customer's applications, adequate design and operating safeguards must be provided by the customer to minimize inherent or procedural hazards.

TI assumes no liability for applications assistance or customer product design. TI does not warrant or represent that any license, either express or implied, is granted under any patent right, copyright, mask work right, or other intellectual property right of TI covering or relating to any combination, machine, or process in which such semiconductor products or services might be or are used. TI's publication of information regarding any third party's products or services does not constitute TI's approval, warranty or endorsement thereof.

Copyright © 1998, Texas Instruments Incorporated

WWW.ALLDATASHEET.COM

Copyright © Each Manufacturing Company.

All Datasheets cannot be modified without permission.

This datasheet has been download from :

www.AllDataSheet.com

100% Free DataSheet Search Site.

Free Download.

No Register.

Fast Search System.

www.AllDataSheet.com