查询5485供应商 捷多邦，专业PCB打样工厂，24小时加急出货

National Semiconductor

June 1989

5485/DM5485/DM7485 4-Bit Magnitude Comparators

General Description

These 4-bit magnitude comparators perform comparison of straight binary or BCD codes. Three fully-decoded decisions about two 4-bit words (A, B) are made and are externally available at three outputs. These devices are fully expandable to any number of bits without external gates. Words of greater length may be compared by connecting comparators in cascade. The A > B, A < B, and A = B outputs of a stage handling less-significant bits are connected to the corresponding inputs of the next stage handling more-significant bits. The stage handling the least-significant bits must have a high-level voltage applied to the A = B input. The cascading paths are implemented with only a two-gate-level delay to reduce overall comparison times for long words.

Features

- Typical power dissipation 275 mW
- Typical delay (4-bit words) 23 ns
- Alternate Military/Aerospace device (5485) is available. Contact a National Semiconductor Sales Office/Distributor for specifications.

Connection Diagram

Dual-In-Line Package

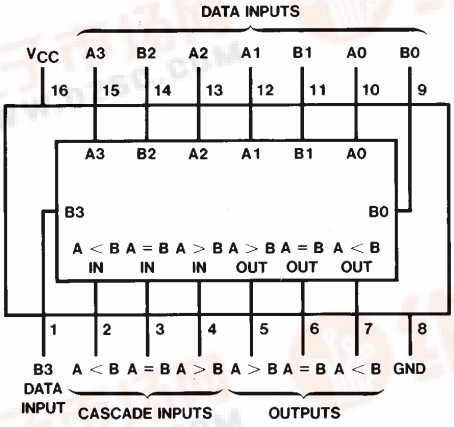

TL/F/6530–1

Order Number 5485DMQB, 5485FMQB, DM5485J, DM5485W or DM7485N
See NS Package Number J16A, N16E or W16A

©1995 National Semiconductor Corporation TL/F/6530 RRD-B30M105/Printed in U. S. A.

找PDF 维库一下 pdf.dzsc.com

Absolute Maximum Ratings (Note)

If Military/Aerospace specified devices are required, please contact the National Semiconductor Sales Office/Distributors for availability and specifications.

Supply Voltage	7V
Input Voltage	5.5V
Operating Free Air Temperature Range	
DM54 and 54	−55°C to +125°C
DM74	0°C to +70°C
Storage Temperature Range	−65°C to +150°C

Note: *The "Absolute Maximum Ratings" are those values beyond which the safety of the device cannot be guaranteed. The device should not be operated at these limits. The parametric values defined in the "Electrical Characteristics" table are not guaranteed at the absolute maximum ratings. The "Recommended Operating Conditions" table will define the conditions for actual device operation.*

Recommended Operating Conditions

Symbol	Parameter	DM5485			DM7485			Units
		Min	Nom	Max	Min	Nom	Max	
V_{CC}	Supply Voltage	4.5	5	5.5	4.75	5	5.25	V
V_{IH}	High Level Input Voltage	2			2			V
V_{IL}	Low Level Input Voltage			0.8			0.8	V
I_{OH}	High Level Output Current			−0.8			−0.8	mA
I_{OL}	Low Level Output Current			16			16	mA
T_A	Free Air Operating Temperature	−55		125	0		70	°C

Electrical Characteristics over recommended operating free air temperature range (unless otherwise noted)

Symbol	Parameter	Conditions		Min	Typ (Note 1)	Max	Units
V_I	Input Clamp Voltage	V_{CC} = Min, I_I = −12 mA				−1.5	V
V_{OH}	High Level Output Voltage	V_{CC} = Min, I_{OH} = Max V_{IL} = Max, V_{IH} = Min		2.4			V
V_{OL}	Low Level Output Voltage	V_{CC} = Min, I_{OL} = Max V_{IH} = Min, V_{IL} = Max				0.4	V
I_I	Input Current @ Max Input Voltage	V_{CC} = Max, V_I = 5.5V				1	mA
I_{IH}	High Level Input Current	V_{CC} = Max V_I = 2.4V	A < B			40	μA
			A > B			40	
			Others			120	
I_{IL}	Low Level Input Current	V_{CC} = Max V_I = 0.4V	A < B			−1.6	mA
			A > B			−1.6	
			Others			−4.8	
I_{OS}	Short Circuit Output Current	V_{CC} = Max (Note 2)	DM54	−20		−55	mA
			DM74	−18		−55	
I_{CC}	Supply Current	V_{CC} = Max (Note 3)			55	88	mA

Note 1: All typicals are at V_{CC} = 5V, T_A = 25°C.

Note 2: Not more than one output should be shorted at a time.

Note 3: I_{CC} is measured with all outputs open, A = B input grounded and all other inputs at 4.5V.

Switching Characteristics at V_{CC} = 5V and T_A = 25°C (See Section 1 for Test Waveforms and Output Load)

Symbol	Parameter	From Input	To Output	Number of Gate Levels	R_L = 400Ω, C_L = 15 pF		Units
					Min	Max	
t_{PLH}	Propagation Delay Time Low-to-High Level Output	Any A or B Data Input	A < B A > B	3		26	ns
			A = B	4		35	
t_{PHL}	Propagation Delay Time High-to-Low Level Output	Any A or B Data Input	A < B A > B	3		30	ns
			A = B	4		30	
t_{PLH}	Propagation Delay Time Low-to-High Level Output	A < B or A = B	A > B	1		11	ns
t_{PHL}	Propagation Delay Time High-to-Low Level Output	A < B or A = B	A > B	1		17	ns
t_{PLH}	Propagation Delay Time Low-to-High Level Output	A =B	A = B	2		20	ns
t_{PHL}	Propagation Delay Time High-to-Low Level Output	A = B	A = B	2		17	ns
t_{PLH}	Propagation Delay Time Low-to-High Level Output	A > B or A = B	A < B	1		11	ns
t_{PHL}	Propagation Delay Time High-to-Low Level Output	A > B or A = B	A < B	1		17	ns

Function Table

Comparing Inputs				Cascading Inputs			Outputs		
A3, B3	**A2, B2**	**A1, B1**	**A0, B0**	**A > B**	**A < B**	**A = B**	**A > B**	**A < B**	**A = B**
A3 > B3	X	X	X	X	X	X	H	L	L
A3 < B3	X	X	X	X	X	X	L	H	L
A3 = B3	A2 > B2	X	X	X	X	X	H	L	L
A3 = B3	A2 < B2	X	X	X	X	X	L	H	L
A3 = B3	A2 = B2	A1 > B1	X	X	X	X	H	L	L
A3 = B3	A2 = B2	A1 < B1	X	X	X	X	L	H	L
A3 = B3	A2 = B2	A1 = B1	A0 > B0	X	X	X	H	L	L
A3 = B3	A2 = B2	A1 = B1	A0 < B0	X	X	X	L	H	L
A3 = B3	A2 = B2	A1 = B1	A0 = B0	H	L	L	H	L	L
A3 = B3	A2 = B2	A1 = B1	A0 = B0	L	H	L	L	H	L
A3 = B3	A2 = B2	A1 = B1	A0 = B0	L	L	H	L	L	H
A3 = B3	A2 = B2	A1 = B1	A0 = B0	X	X	H	L	L	H
A3 = B3	A2 = B2	A1 = B1	A0 = B0	H	H	L	L	L	L
A3 = B3	A2 = B2	A1 = B1	A0 = B0	L	L	L	H	H	L

H = High Level, L = Low Level, X = Don't Care

Logic Diagram

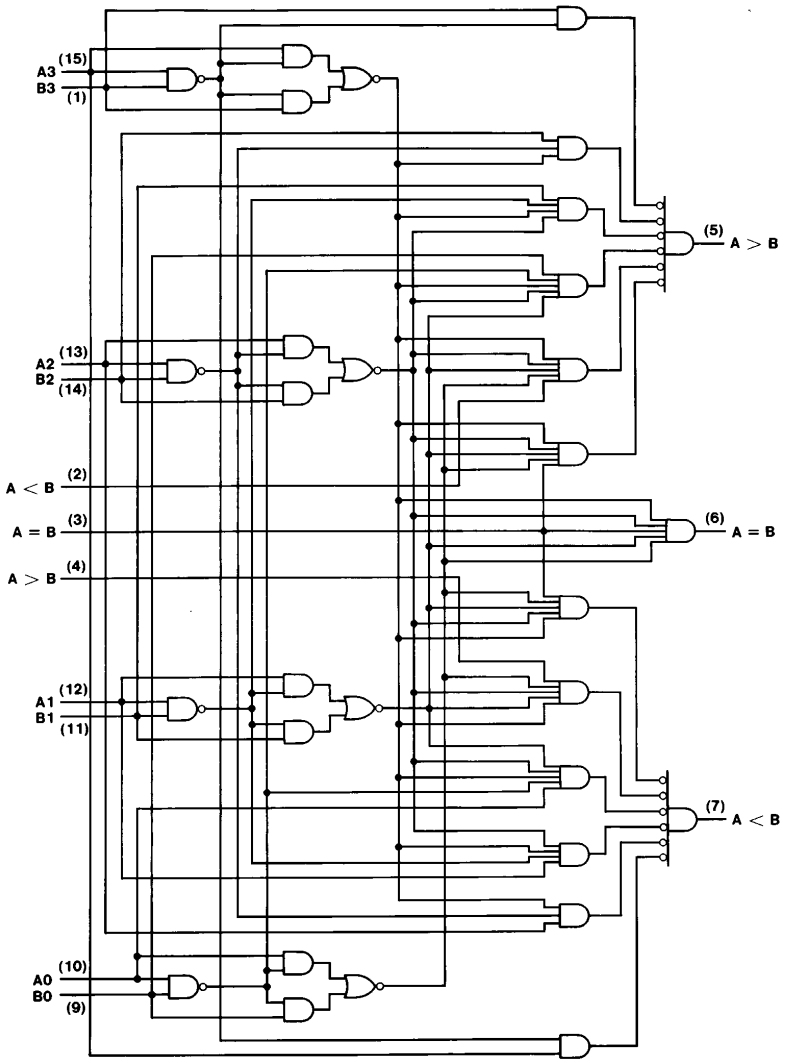

TL/F/6530–2

Physical Dimensions inches (millimeters)

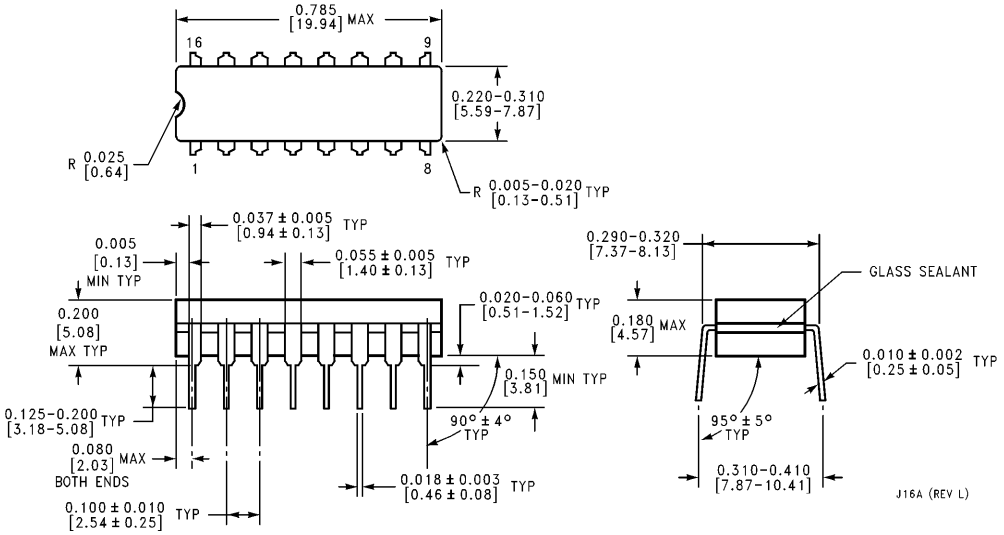

16-Lead Ceramic Dual-In-Line Package (J)
Order Number 5485DMQB or DM5485J
NS Package Number J16A

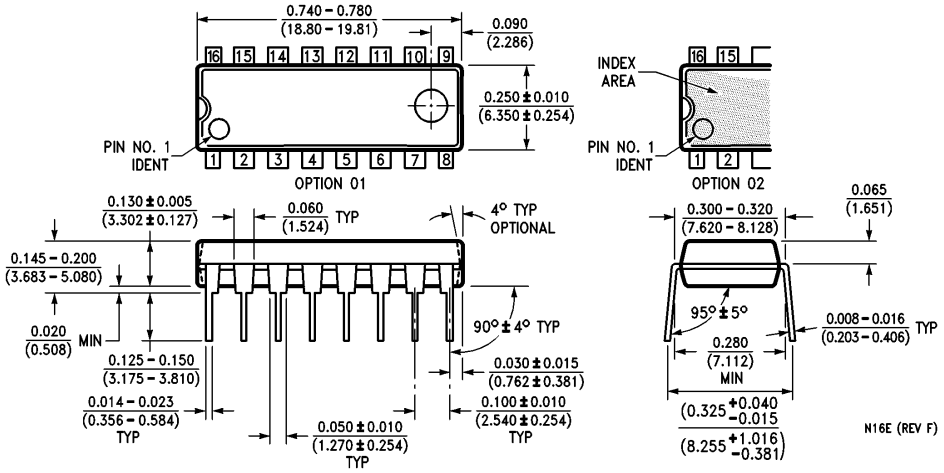

16-Lead Molded Dual-In-Line Package (N)
Order Number DM7485N
NS Package Number N16E

Physical Dimensions inches (millimeters) (Continued)

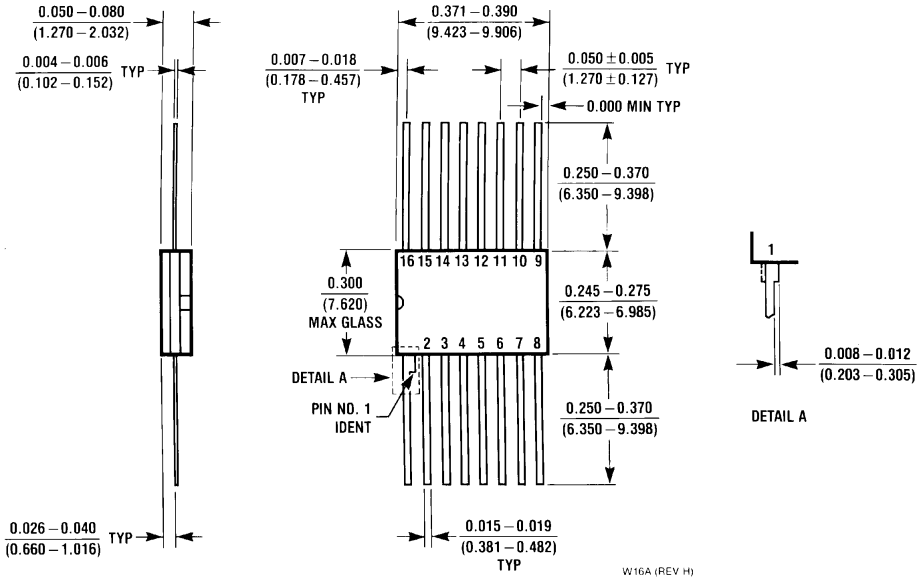

16-Lead Ceramic Flat Packge (W)
Order Number 5485FMQB or DM5485W
NS Package Number W16A

LIFE SUPPORT POLICY

NATIONAL'S PRODUCTS ARE NOT AUTHORIZED FOR USE AS CRITICAL COMPONENTS IN LIFE SUPPORT DEVICES OR SYSTEMS WITHOUT THE EXPRESS WRITTEN APPROVAL OF THE PRESIDENT OF NATIONAL SEMICONDUCTOR CORPORATION. As used herein:

1. Life support devices or systems are devices or systems which, (a) are intended for surgical implant into the body, or (b) support or sustain life, and whose failure to perform, when properly used in accordance with instructions for use provided in the labeling, can be reasonably expected to result in a significant injury to the user.
2. A critical component is any component of a life support device or system whose failure to perform can be reasonably expected to cause the failure of the life support device or system, or to affect its safety or effectiveness.

National Semiconductor Corporation
1111 West Bardin Road
Arlington, TX 76017
Tel: 1(800) 272-9959
Fax: 1(800) 737-7018

National Semiconductor Europe
Fax: (+49) 0-180-530 85 86
Email: cnjwge@tevm2.nsc.com
Deutsch Tel: (+49) 0-180-530 85 85
English Tel: (+49) 0-180-532 78 32
Français Tel: (+49) 0-180-532 93 58
Italiano Tel: (+49) 0-180-534 16 80

National Semiconductor Hong Kong Ltd.
13th Floor, Straight Block,
Ocean Centre, 5 Canton Rd.
Tsimshatsui, Kowloon
Hong Kong
Tel: (852) 2737-1600
Fax: (852) 2736-9960

National Semiconductor Japan Ltd.
Tel: 81-043-299-2309
Fax: 81-043-299-2408

National does not assume any responsibility for use of any circuitry described, no circuit patent licenses are implied and National reserves the right at any time without notice to change said circuitry and specifications.