查询54LS00供应商 捷多邦，专业PCB打样工厂，24小时加急出货

National Semiconductor

June 1989

54LS00/DM54LS00/DM74LS00 Quad 2-Input NAND Gates

General Description

This device contains four independent gates each of which performs the logic NAND function.

Features

- Alternate Military/Aerospace device (54LS00) is available. Contact a National Semiconductor Sales Office/Distributor for specifications.

Connection Diagram

Dual-In-Line Package

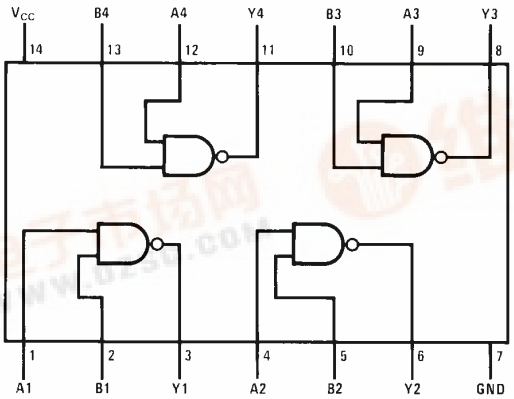

TL/F/6439–1

Order Number 54LS00DMQB, 54LS00FMQB, 54LS00LMQB, DM54LS00J, DM54LS00W, DM74LS00M or DM74LS00N
See NS Package Number E20A, J14A, M14A, N14A or W14B

Function Table

$Y = \overline{AB}$

Inputs		Output
A	B	Y
L	L	H
L	H	H
H	L	H
H	H	L

H = High Logic Level
L = Low Logic Level

©1995 National Semiconductor Corporation TL/F/6439 RRD-B30M105/Printed in U. S. A.

找PDF 维库一下 pdf.dzsc.com

Absolute Maximum Ratings (Note)

If Military/Aerospace specified devices are required, please contact the National Semiconductor Sales Office/Distributors for availability and specifications.

Supply Voltage	7V
Input Voltage	7V
Operating Free Air Temperature Range	
DM54LS and 54LS	−55°C to +125°C
DM74LS	0°C to +70°C
Storage Temperature Range	−65°C to +150°C

Note: *The "Absolute Maximum Ratings" are those values beyond which the safety of the device cannot be guaranteed. The device should not be operated at these limits. The parametric values defined in the "Electrical Characteristics" table are not guaranteed at the absolute maximum ratings. The "Recommended Operating Conditions" table will define the conditions for actual device operation.*

Recommended Operating Conditions

Symbol	Parameter	DM54LS00			DM74LS00			Units
		Min	Nom	Max	Min	Nom	Max	
V_{CC}	Supply Voltage	4.5	5	5.5	4.75	5	5.25	V
V_{IH}	High Level Input Voltage	2			2			V
V_{IL}	Low Level Input Voltage			0.7			0.8	V
I_{OH}	High Level Output Current			−0.4			−0.4	mA
I_{OL}	Low Level Output Current			4			8	mA
T_A	Free Air Operating Temperature	−55		125	0		70	°C

Electrical Characteristics over recommended operating free air temperature range (unless otherwise noted)

Symbol	Parameter	Conditions		Min	Typ (Note 1)	Max	Units
V_I	Input Clamp Voltage	V_{CC} = Min, I_I = −18 mA				−1.5	V
V_{OH}	High Level Output Voltage	V_{CC} = Min, I_{OH} = Max, V_{IL} = Max	DM54	2.5	3.4		V
			DM74	2.7	3.4		
V_{OL}	Low Level Output Voltage	V_{CC} = Min, I_{OL} = Max, V_{IH} = Min	DM54		0.25	0.4	V
			DM74		0.35	0.5	
		I_{OL} = 4 mA, V_{CC} = Min	DM74		0.25	0.4	
I_I	Input Current @ Max Input Voltage	V_{CC} = Max, V_I = 7V				0.1	mA
I_{IH}	High Level Input Current	V_{CC} = Max, V_I = 2.7V				20	μA
I_{IL}	Low Level Input Current	V_{CC} = Max, V_I = 0.4V				−0.36	mA
I_{OS}	Short Circuit Output Current	V_{CC} = Max (Note 2)	DM54	−20		−100	mA
			DM74	−20		−100	
I_{CCH}	Supply Current with Outputs High	V_{CC} = Max			0.8	1.6	mA
I_{CCL}	Supply Current with Outputs Low	V_{CC} = Max			2.4	4.4	mA

Switching Characteristics at V_{CC} = 5V and T_A = 25°C (See Section 1 for Test Waveforms and Output Load)

Symbol	Parameter	R_L = 2 kΩ				Units
		C_L = 15 pF		C_L = 50 pF		
		Min	Max	Min	Max	
t_{PLH}	Propagation Delay Time Low to High Level Output	3	10	4	15	ns
t_{PHL}	Propagation Delay Time High to Low Level Output	3	10	4	15	ns

Note 1: All typicals are at V_{CC} = 5V, T_A = 25°C.

Note 2: Not more than one output should be shorted at a time, and the duration should not exceed one second.

Physical Dimensions inches (millimeters)

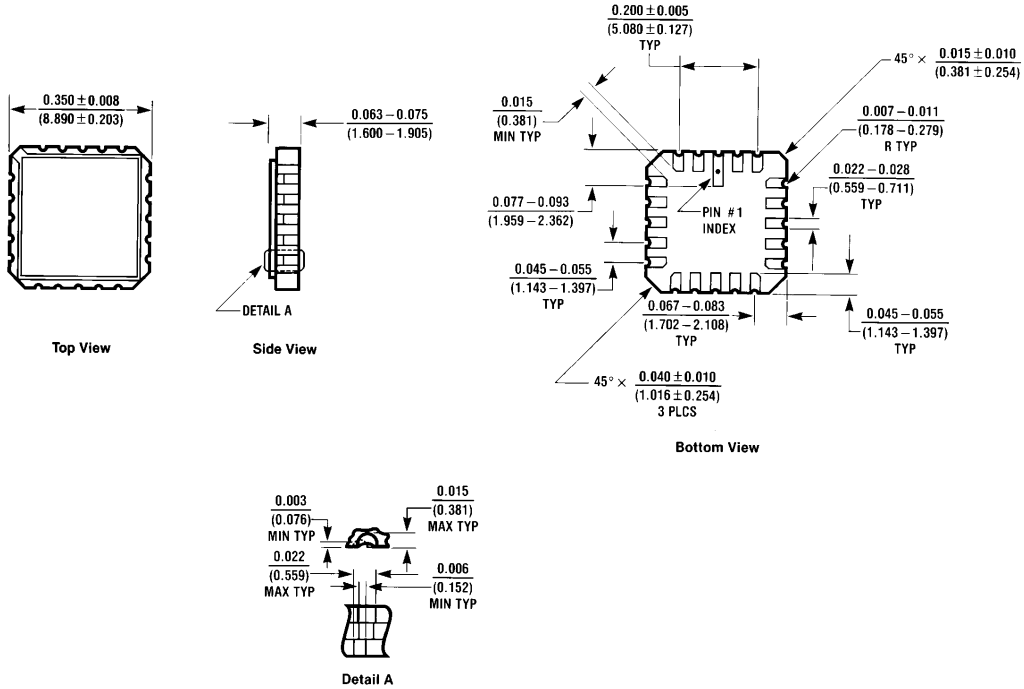

Ceramic Leadless Chip Carrier Package (E)
Order Number 54LS00LMQB
NS Package Number E20A

Physical Dimensions inches (millimeters)

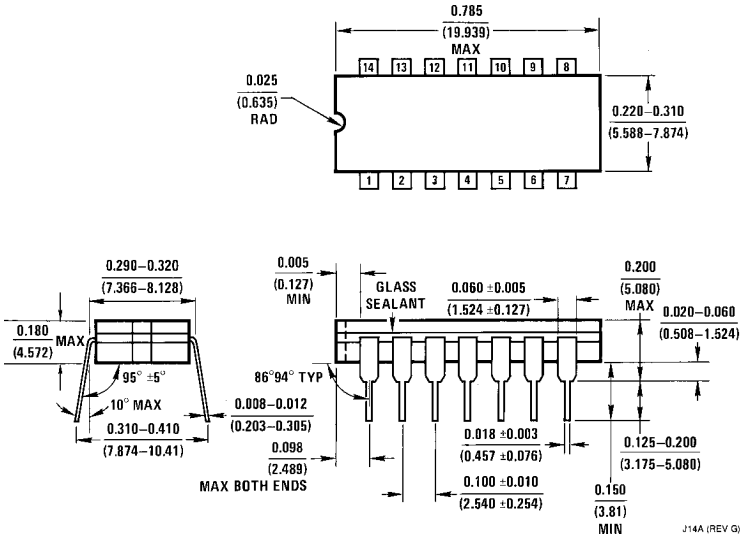

14-Lead Ceramic Dual-In-Line Package (J)
Order Number 54LS00DMQB or DM54LS00J
NS Package Number J14A

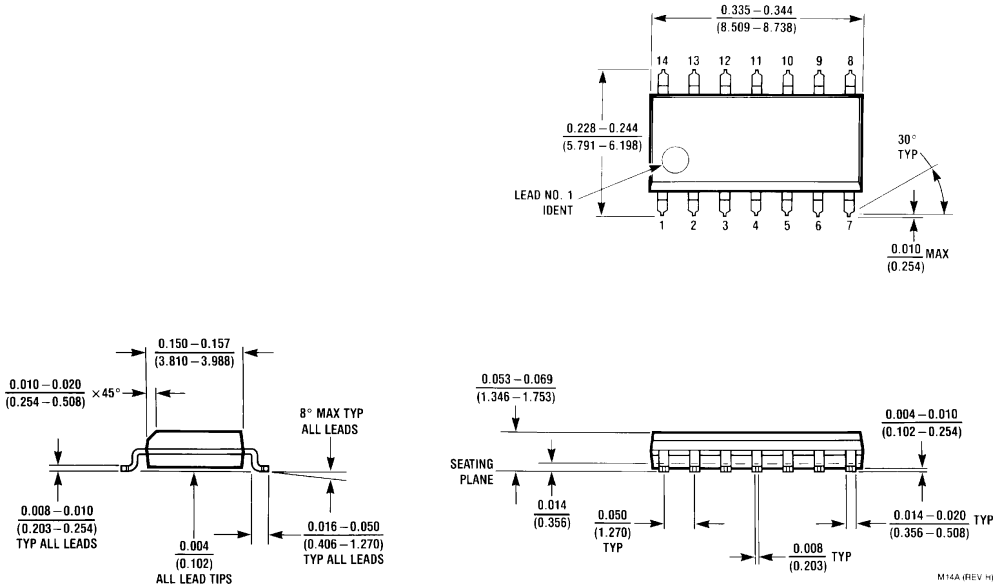

14-Lead Small Outline Molded Package (M)
Order Number DM74LS00M
NS Package Number M14A

Physical Dimensions inches (millimeters) (Continued)

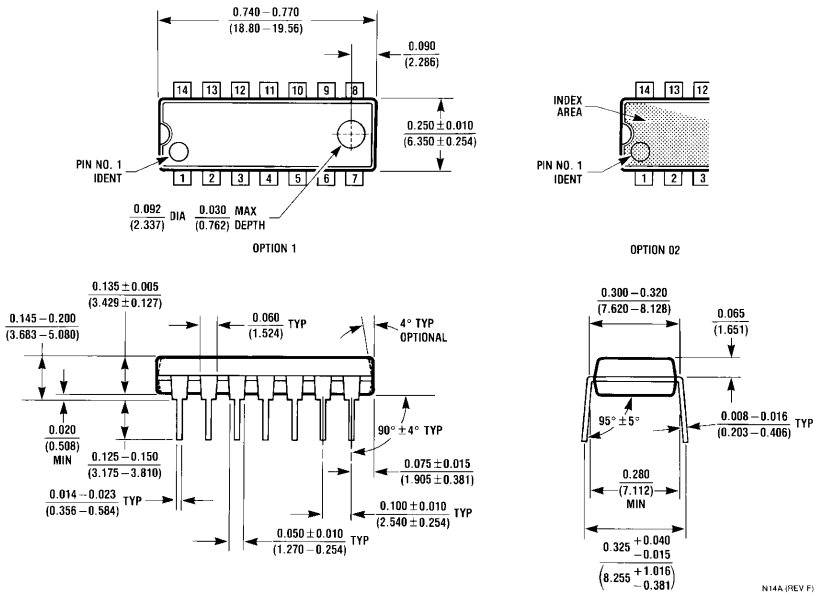

14-Lead Molded Dual-In-Line Package (N)
Order Number DM74LS00N
NS Package Number N14A

Physical Dimensions inches (millimeters) (Continued)

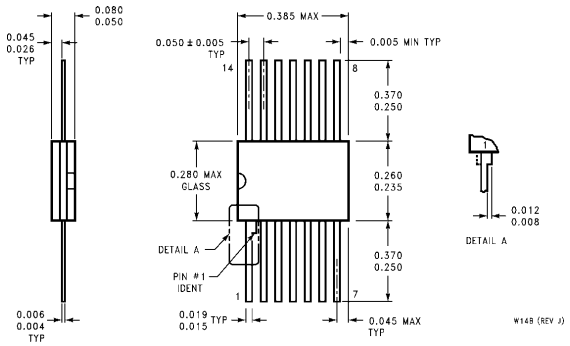

14-Lead Ceramic Flat Package (W)
Order Number 54LS00FMQB or DM54LS00W
NS Package Number W14B

LIFE SUPPORT POLICY

NATIONAL'S PRODUCTS ARE NOT AUTHORIZED FOR USE AS CRITICAL COMPONENTS IN LIFE SUPPORT DEVICES OR SYSTEMS WITHOUT THE EXPRESS WRITTEN APPROVAL OF THE PRESIDENT OF NATIONAL SEMICONDUCTOR CORPORATION. As used herein:

1. Life support devices or systems are devices or systems which, (a) are intended for surgical implant into the body, or (b) support or sustain life, and whose failure to perform, when properly used in accordance with instructions for use provided in the labeling, can be reasonably expected to result in a significant injury to the user.
2. A critical component is any component of a life support device or system whose failure to perform can be reasonably expected to cause the failure of the life support device or system, or to affect its safety or effectiveness.

National Semiconductor Corporation
1111 West Bardin Road
Arlington, TX 76017
Tel: 1(800) 272-9959
Fax: 1(800) 737-7018

National Semiconductor Europe
Fax: (+49) 0-180-530 85 86
Email: cnjwge@tevm2.nsc.com
Deutsch Tel: (+49) 0-180-530 85 85
English Tel: (+49) 0-180-532 78 32
Français Tel: (+49) 0-180-532 93 58
Italiano Tel: (+49) 0-180-534 16 80

National Semiconductor Hong Kong Ltd.
13th Floor, Straight Block,
Ocean Centre, 5 Canton Rd.
Tsimshatsui, Kowloon
Hong Kong
Tel: (852) 2737-1600
Fax: (852) 2736-9960

National Semiconductor Japan Ltd.
Tel: 81-043-299-2309
Fax: 81-043-299-2408

National does not assume any responsibility for use of any circuitry described, no circuit patent licenses are implied and National reserves the right at any time without notice to change said circuitry and specifications.