PRO–CRIMPER* II Hand Tool Assembly 58546–1 with Die Assembly 58545–1

PROPER USE GUIDELINES

Cumulative Trauma Disorders can result from the prolonged use of manually powered hand tools. Hand tools are intended for occasional use and low volume applications. A wide selection of powered application equipment for extended–use, production operations is available.

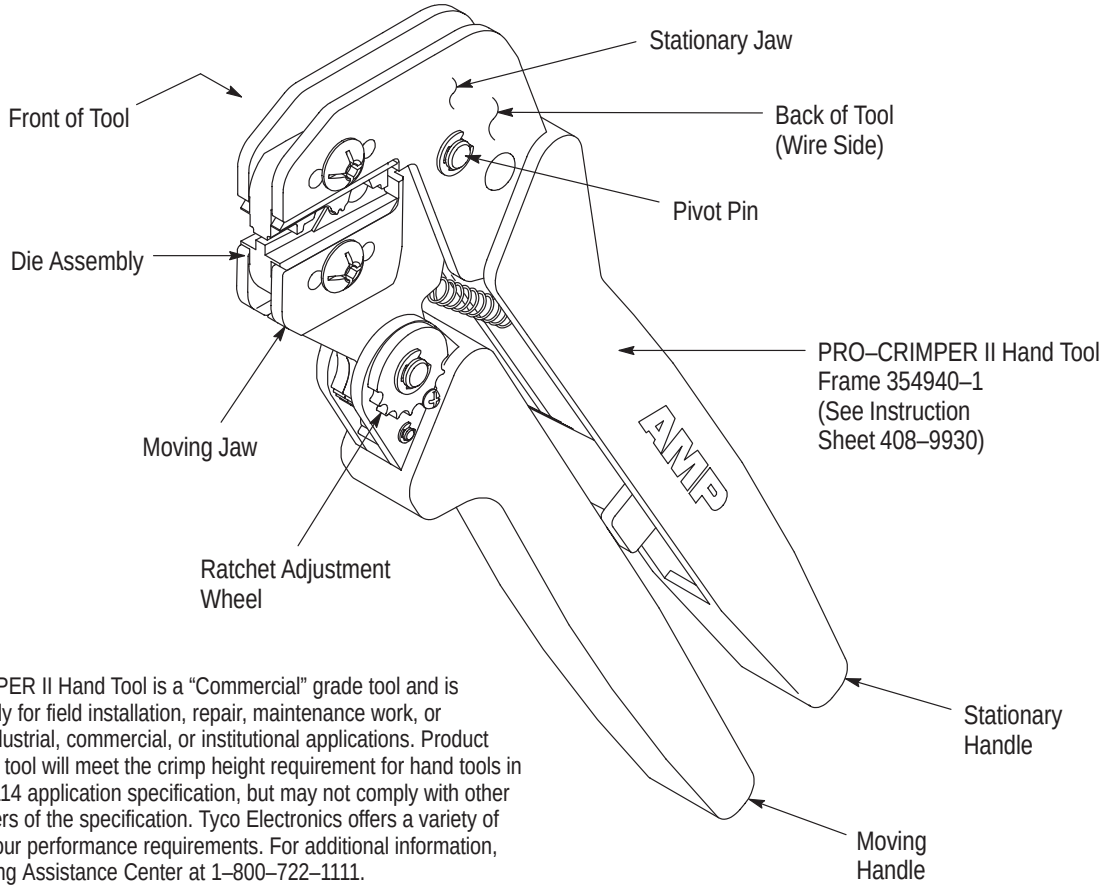

The PRO–CRIMPER II Hand Tool is a “Commercial” grade tool and is designed primarily for field installation, repair, maintenance work, or prototyping in industrial, commercial, or institutional applications. Product crimped with this tool will meet the crimp height requirement for hand tools in the appropriate 114 application specification, but may not comply with other feature parameters of the specification. Tyco Electronics offers a variety of tools to satisfy your performance requirements. For additional information, contact the Tooling Assistance Center at 1–800–722–1111.

DIE ASSEMBLY	PRODUCT FAMILY‡	WIRE	
		SIZE (AWG)	STRIP LENGTH (mm [in.])
58545–1	SOLISTRAND* Butt Splice	22–10	6.35–7.14 [.25–.281]

‡ Contact the Tooling Assistance Center at the number listed below for specific splice part numbers.

Figure 1

1. INTRODUCTION

PRO–CRIMPER II Hand Tool Assembly 58546–1 consists of Die Assembly 58545–1 and PRO–CRIMPER II Hand Tool Frame 354940–1. The tool is used to crimp the splices onto the wire size listed in Figure 1.

Read these instructions thoroughly before crimping any splices.

NOTE *Dimensions on this sheet are in millimeters [with inch equivalents provided in brackets].*

Reasons for reissue of this instruction sheet are provided in Section 10, REVISION SUMMARY.

2. DESCRIPTION (Figures 1 and 2)

The tool features a tool frame with a stationary jaw and handle, a moving jaw, a moving handle, and an adjustable ratchet that ensures full crimping.

The tool frame holds a die assembly with three crimping chambers. The die assembly features an upper die and a lower die. Die retaining screws are used to position and secure the dies in the tool frame.

©2003 Tyco Electronics Corporation, Harrisburg, PA
All International Rights Reserved
AMP and Tyco are trademarks. *Trademark
Other products, logos, and company names used are the property of their respective owners.

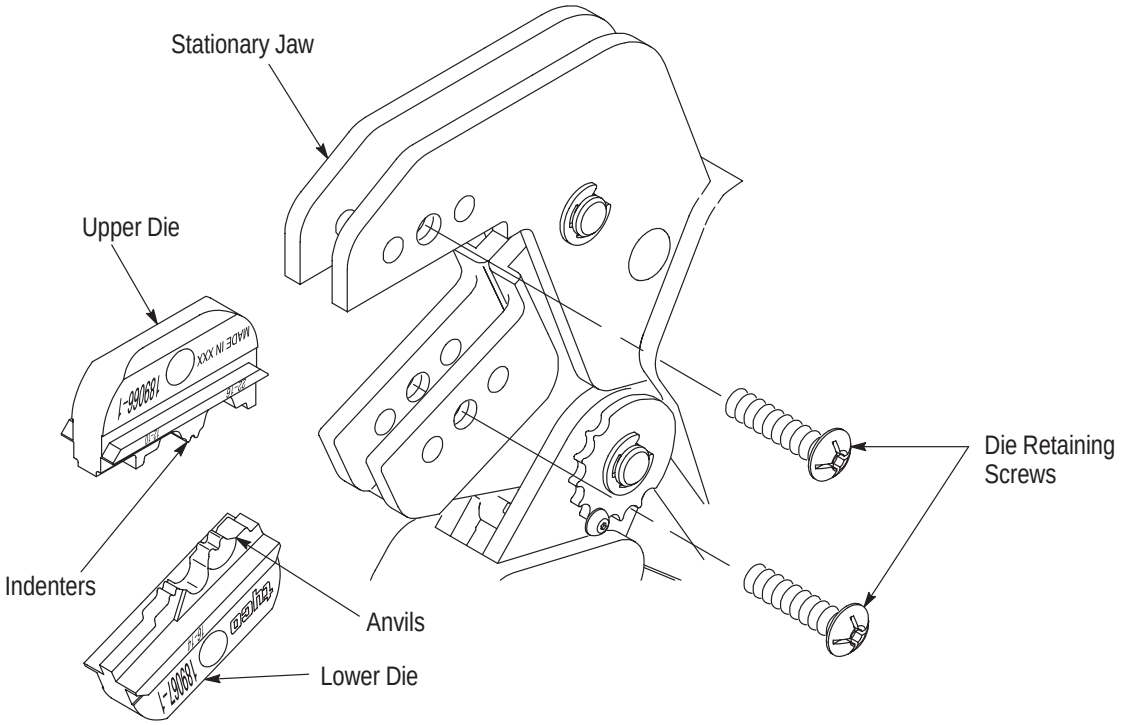

Figure 2

3. DIE ASSEMBLY INSTALLATION AND REMOVAL

1. Open the tool handles and remove the two die retaining screws from the tool jaws.

2. Place the upper die in the stationary jaw of the tool frame so that the largest indenter is facing inward. See Figure 2.

3. Insert the die retaining screw through the stationary jaw and through the die. Tighten the screw just enough to hold the die in place. Do *not* tighten the screw completely at this time.

4. Place the lower die in the moving jaw of the tool frame so that the largest anvil is facing inward. See Figure 2.

5. Insert the die retaining screw through the moving jaw and through the die. Tighten the screw just enough to hold the die in place. Do *not* tighten the screw completely at this time.

6. Carefully close the tool handles, making sure that the anvils and indenters align properly. Continue closing the tool handles until the ratchet has engaged sufficiently to hold the dies in place, then tighten both die retaining screws.

7. To disassemble, open the tool handles until the ratchet releases, remove the two die retaining screws, and slide the dies out of the tool jaws.

4. CRIMPING PROCEDURE

NOTE *Before using the tool, the crimping chambers and tool ratchet should be inspected as specified in Section 5, CRIMP HEIGHT INSPECTION, and Section 6, SHUT HEIGHT ADJUSTMENT.*

Refer to Figure 1 and select wire of the specified size and insulation diameter. Strip the wire to the length indicated, taking care not to nick or cut wire strands. Select an applicable splice and identify the appropriate crimping chamber according to the wire size markings on the dies. Refer to Figure 3 and proceed as follows:

1. Hold tool so that the back (wire side) is facing you. Squeeze tool handles together until the ratchet releases, then allow them to open fully.

2. Center the splice wire barrel on the anvil of the upper die as shown in Figure 3. If visible, be sure to place the brazed seam on the splice toward the indenter.

3. Hold the wire barrel in place and squeeze the tool handles together until ratchet engages sufficiently to hold the splice in position. Do NOT deform the insulation barrel or wire barrel.

4. Insert stripped wire into the wire barrel, making sure that the insulation does not enter the wire barrel. See Figure 3.

5. Holding wire in place, squeeze tool handles together until ratchet releases. Allow tool handles to open, then remove crimped splice.

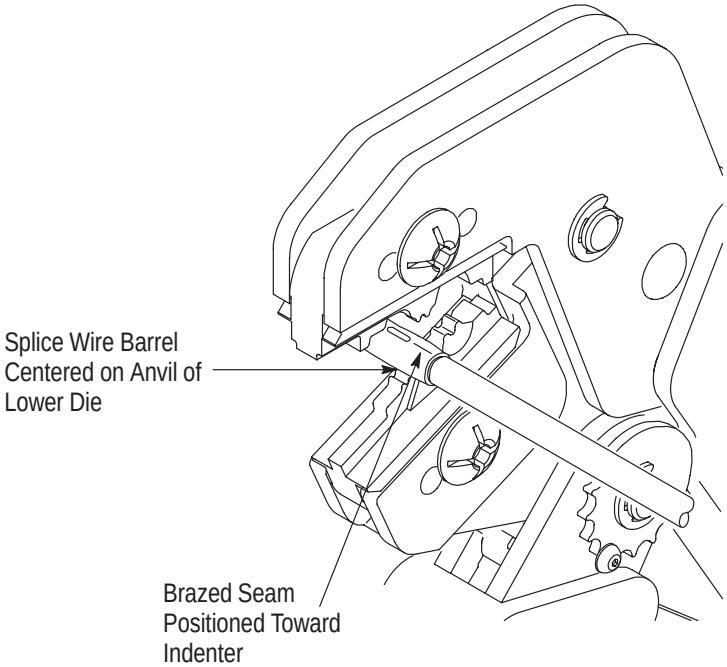

Figure 3

6. To crimp the other half of a splice, reposition the uncrimped wire barrel in the crimping chamber, and repeat the crimping procedure.

NOTE *If splice cannot be turned for crimping the other half, turn the tool around.*

7. Inspect the crimped splice according to Figure 4. Check the crimp height as described in Section 5. If necessary, adjust the shut height as described in Section 6.

CAUTION *Damaged splices may not be used. If a damaged splice is evident, it must be replaced with a new one.*

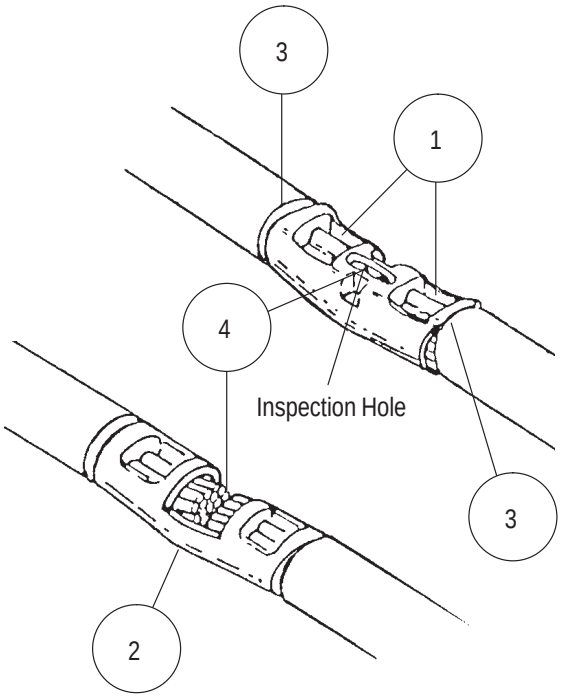

1 Crimp is centered on wire barrel. It is acceptable for crimp to be slightly off center, but NOT OFF THE END of the wire barrel.

2 Wire size being used matches wire size range stamped on splice and dies.

3 Wire insulation does not enter wire barrel.

4 Wire is flush with or extends slightly beyond end of wire barrel. Wire is visible through inspection hole of splices.

Figure 4

5. CRIMP HEIGHT INSPECTION

This inspection requires the use of plug gages conforming to the dimensions provided in Figure 5. Tyco Electronics does not manufacture or market these gages. To gage the crimping chamber, proceed as follows:

1. Remove traces of oil or dirt from the crimping chamber and plug gage.

2. Close the tool handles until the dies have bottomed. Do NOT force dies beyond initial contact.

3. Align the GO element with the crimping chamber. Push element straight into the crimping chamber without using force.

Suggested Plug Gage Design

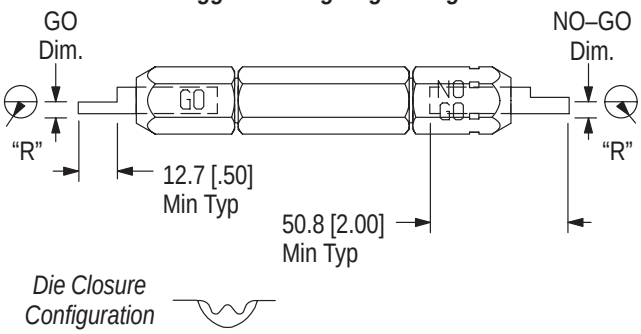

CRIMPING CHAMBER (Die Marking)	GAGE ELEMENT DIMENSIONS		
	GO	NO–GO	"R" (Radius)
22–18	1.143–1.151 [.0450–.0453]	1.344–1.346 [.0529–.0530]	1.57 [.062]
16–14	1.346–1.354 [.0530–.0533]	1.547–1.549 [.0609–.0610]	1.98 [.078]
12–10	1.905–1.913 [.0750–.0753]	2.106–2.108 [.0829–.0830]	2.77 [.109]

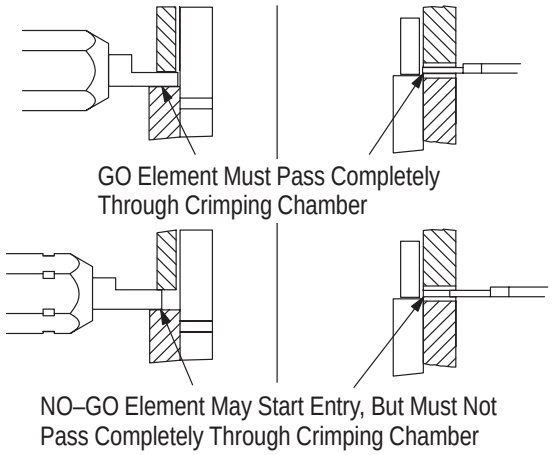

Figure 5

The GO element must pass completely through the crimping chamber. See Figure 5.

4. Align the NO–GO element and try to insert it straight into the same crimping chamber. The NO–GO element may start entry, but must not pass completely through the crimping chamber. See Figure 5.

If the crimping chamber conforms to the gage inspection, the tool is considered dimensionally correct, and should be lubricated with a THIN coat of any good SAE 20 motor oil. If not, the tool must be returned to Tyco Electronics for further evaluation and repair. Refer to Section 8, REPLACEMENT.

For additional information regarding the use of a plug gage, refer to instruction sheet 408–7424.

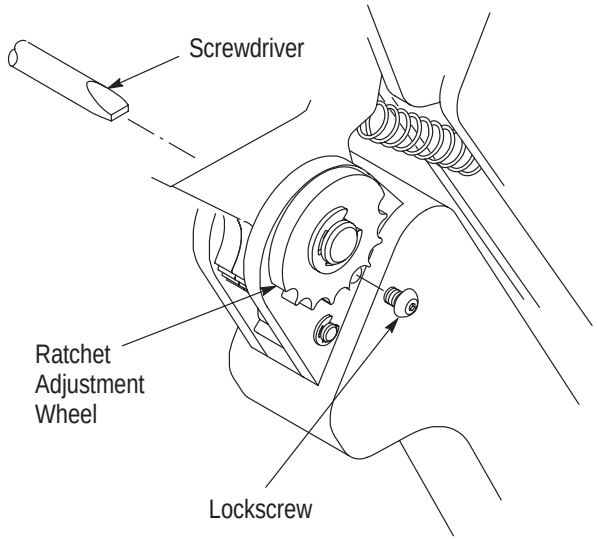

Figure 6

6. SHUT HEIGHT ADJUSTMENT (Figure 6)

The frame assembly ratchet mechanism features an adjustment wheel with numbered settings. If the dies do not bottom, adjust the ratchet as follows:

1. Remove the lockscrew from the ratchet adjustment wheel.

2. With a screwdriver, adjust the ratchet wheel from the opposite side of the frame.

3. Observe the ratchet adjustment wheel. If the dies do not bottom, rotate the adjustment wheel COUNTERCLOCKWISE to a higher–numbered setting.

4. Replace the lockscrew.

7. MAINTENANCE AND INSPECTION

7.1. Maintenance

Ensure that the tool and dies are clean by wiping them with a clean, soft cloth. Remove any debris with a clean, soft brush. Do not use objects that could damage the tool. When not in use, keep handles closed to prevent objects from becoming lodged in the crimping dies, and store in a clean, dry area.

7.2. Visual Inspection

The die assembly should be inspected on a regular basis to ensure that they have not become worn or damaged. Inspect the crimping chambers for flattened, chipped, worn, or broken areas. If damage or abnormal wear is evident, the tool or dies must be replaced. See Section 8, REPLACEMENT.

8. REPLACEMENT

Customer–replaceable parts are shown in Figure 1. Available separately, PRO–CRIMPER II Repair Kit 679221–1 includes a replacement nut and a variety of pins, rings, screws, and springs. If the dies are damaged or worn excessively, they must be replaced.

Order the repair kit and replaceable parts through your Tyco Electronics Representative, or call 1–800–526–5142, or send a facsimile of your purchase order to 717–986–7605, or write to:

CUSTOMER SERVICE (38–35)
TYCO ELECTRONICS CORPORATION
PO BOX 3608
HARRISBURG, PA 17105–3608

For tool repair service, please contact a Tyco Electronics Representative at 1–800–526–5136.

9. STANDARD SOLISTRAND TERMINALS

To crimp standard SOLISTRAND terminals and parallel splices, refer to Instruction Sheet 408–8678.

10. REVISION SUMMARY

Revisions to this instruction sheet per EC 0990–1181–03 include:

- Updated document to corporate requirements
- Added markings to dies in Figure 2
- Changed wire size range from 22–16 to 22–18 in table in Figure 5