查询5962F0251101QEC供应商 捷多邦，专业PCB打样工厂，24小时加急出货

Single Event and Total Dose Hardened, High-Speed, Dual Output PWM

The single event and total dose hardened IS-1825ASRH pulse width modulator is designed to be used in high frequency, switching power supplies in either voltage or current-mode configurations. The design includes a precision voltage reference, a low power start-up circuit, a high frequency oscillator, a wide-band error amplifier and a fast current-limit comparator. The use of proprietary process capabilities and unique design techniques results in fast propagation delay times and high output current over a wide range of output voltages.

Constructed with the Intersil Rad-hard Silicon Gate (RSG) dielectrically isolated BiCMOS process, these devices are immune to single event latch-up and have been specifically designed to provide a high level of immunity to single event transients. All specified parameters are guaranteed and tested for 300krad(Si) total dose performance.

Detailed Electrical Specifications for these devices are contained in SMD 5962-02511. A "hot-link" is provided on our website for downloading the SMD.

Pinout

IS1-1825ASRH (CDIP2-T16 SBDIP)
TOP VIEW

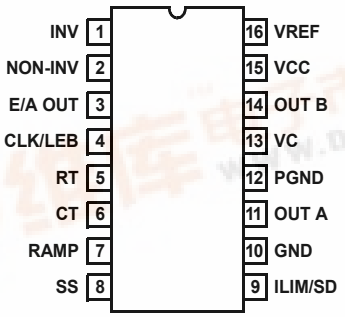

IS9-1825ASRH (CDFP4-F20 FLATPACK)
TOP VIEW

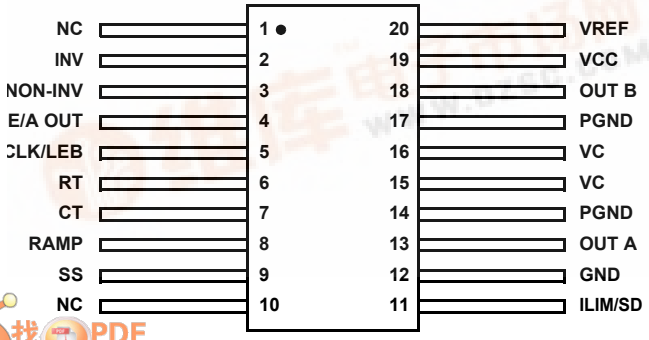

Features

- Electrically Screened to DSCC SMD # 5962-02511
- QML Qualified per MIL-PRF-38535 Requirements
- Radiation Environment
  - Total Dose. . . . . 300krad(SI) (max)
  - Latch-up Immune . . . . . Dielectrically Isolated
  - SEU immune . . . . . LET=35MeV/mg/cm^2(max)
- Oscillator Frequency . . . . . .1MHz(max)
- High Output Drive Current . . . . . .1A peak(typ)
- Low Start-up Current . . . . . 300µA(max)
- Undervoltage Lockout
  - Start Threshold . . . . . .8.8V(max)
  - Stop Threshold . . . . . 7.6V(min)
  - Hysteresis. . . . . 300mV(min)
- Improved Soft-Start Function Compared with Commercial 1825A Types
- Pulse-by-Pulse Current Limiting
- Latched Overcurrent Comparator with Full Cycle Restart
- Programmable Leading Edge Blanking

Applications

- Voltage or Current-Mode Switching Power Supplies
- Control of High Current MOSFET Drivers
- Motor Speed and Direction Control

Ordering Information

ORDERING NUMBER	INTERNAL MKT. NUMBER	TEMP. RANGE (°C)
5962F0251101QEC	IS1-1825ASRH-8	-50 to 125
5962F0251101QXC	IS9-1825ASRH-8	-50 to 125
5962F0251101VEC	IS1-1825ASRH-Q	-50 to 125
5962F0251101VXC	IS9-1825ASRH-Q	-50 to 125
IS1-1825ASRH/Proto	IS1-1825ASRH/Proto	-50 to 125
IS9-1825ASRH/Proto	IS9-1825ASRH/Proto	-50 to 125

找PDF 维库一下 pdf.dzsc.com

CAUTION: These devices are sensitive to electrostatic discharge; follow proper IC Handling Procedures.

Die Characteristics

DIE DIMENSIONS:

4310μm x 5840μm (170 mils x 230 mils)
Thickness: 483μm ± 25.4μm (19 mils ± 1 mil)

INTERFACE MATERIALS

Glassivation

Type: Phosphorus Silicon Glass (PSG)
Thickness: 8.0kA +/- 1.0kA

Top Metallization

Type: AlSiCu
Thickness: 16.0kA +/- 2kA

Substrate:

Radiation Hardened Silicon Gate, Dielectric Isolation

Backside Finish:

Silicon

ASSEMBLY RELATED INFORMATION

Substrate Potential:

Unbiased (DI)

ADDITIONAL INFORMATION

Worst Case Current Density:

$<2.0 \times 10^5$ A/cm^2

Transistor Count:

585

Metallization Mask Layout

IS-1825ASRH

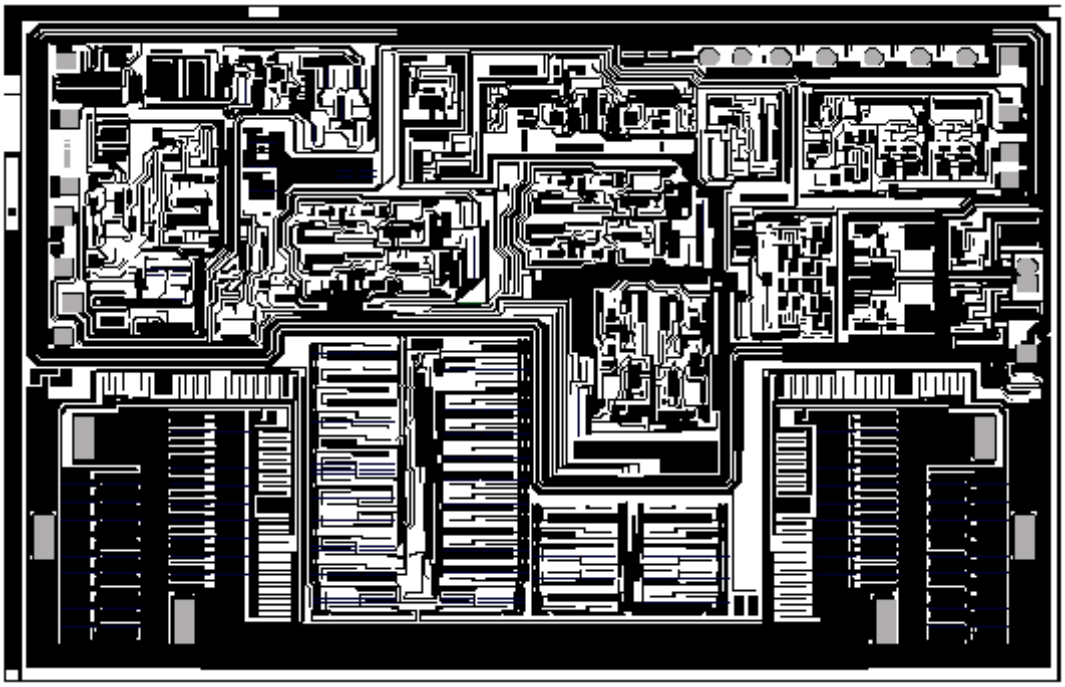

Notes:

1. Both the OGND (oscillator ground) and the GND (control circuit ground) pads must be bonded to ground. These pads are both bonded to the GND pin on the packaged devices.
2. All double-sized bond pads must be double bonded for current sharing purposes.

All Intersil U.S. products are manufactured, assembled and tested utilizing ISO9000 quality systems.
Intersil Corporation's quality certifications can be viewed at www.intersil.com/design/quality

Intersil products are sold by description only. Intersil Corporation reserves the right to make changes in circuit design, software and/or specifications at any time without notice. Accordingly, the reader is cautioned to verify that data sheets are current before placing orders. Information furnished by Intersil is believed to be accurate and reliable. However, no responsibility is assumed by Intersil or its subsidiaries for its use; nor for any infringements of patents or other rights of third parties which may result from its use. No license is granted by implication or otherwise under any patent or patent rights of Intersil or its subsidiaries.

For information regarding Intersil Corporation and its products, see www.intersil.com