查询MAX4506供应商 捷多邦，专业PCB打样工厂，24小时加急出货

19-1415; Rev 1; 8/99

MAXIM

Fault-Protected, High-Voltage Signal-Line Protectors

MAX4506/MAX4507

General Description

The MAX4506/MAX4507 multiple, two-terminal signal-line protectors are pin-compatible with the industry-standard MAX366/MAX367. These new circuit protectors feature fault-protected inputs and Rail-to-Rail® signal handling capability. The input pins are protected from overvoltage faults up to ±36V with power on or ±40V with power off. During a fault condition, the input terminal becomes an open circuit and only nanoamperes of leakage current flow from the source; but the switch output (OUT_) furnishes typically 19mA from the appropriate polarity supply to the load. This ensures unambiguous rail-to-rail outputs when a fault begins and ends.

The MAX4506 contains three independent protectors while the MAX4507 contains eight independent protectors. They can protect both unipolar and bipolar analog signals using either unipolar (+9V to +36V) or bipolar (±8V to ±18V) power supplies.

These devices have no logic control inputs; the protectors are designed to be always-on when the supplies are on. On-resistance is 100Ω max and matched within 7Ω, and on-leakage is less than 0.5nA at T_A = +25°C. The MAX4506 is available in 8-pin SO/DIP packages. The MAX4507 is available in 20-pin SSOP and 18-pin SO/DIP packages.

Applications

Process-Control Systems
Hot-Insertion Boards/Systems
Data-Acquisition Systems
Redundant/Backup Systems
ATE Equipment
Sensitive Instruments

Typical Operating Circuit

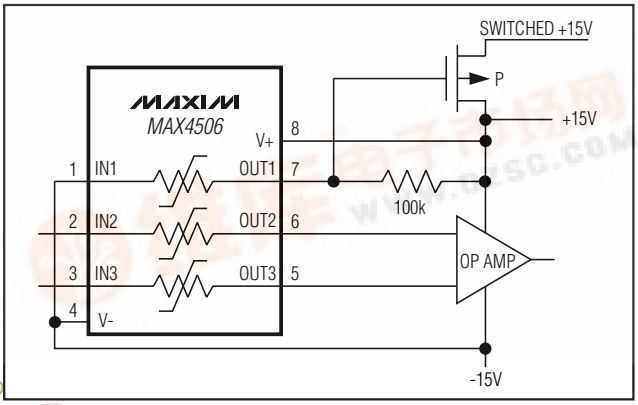

Rail-to-Rail is a registered trademark of Nippon Motorola, Ltd.

Features

- ♦ **Overvoltage Protection**
  ±40V with Power Off
  ±36V with Power On
- ♦ **Open Signal Paths with Power Off**
- ♦ **Output Clamps to Either Rail with an Input Overvoltage**
- ♦ **Any On Channel Output is Not Affected by an Overvoltage to Any Other Channel**
- ♦ **100Ω max On-Resistance**
- ♦ **10ns Overvoltage Turn-On Delay**
- ♦ **No Latchup During Power Sequencing**
- ♦ **Rail-to-Rail Signal Handling**
- ♦ **500Ω Output Clamp Resistance During Overvoltage**

Ordering Information

PART	TEMP. RANGE	PIN-PACKAGE
MAX4506CSA	0°C to +70°C	8 SO
MAX4506CPA	0°C to +70°C	8 Plastic DIP
MAX4506C/D	0°C to +70°C	Dice*
MAX4506ESA	-40°C to +85°C	8 SO
MAX4506EPA	-40°C to +85°C	8 Plastic DIP
MAX4506MJA	-55°C to +125°C	8 CERDIP**

Ordering Information continued at end of data sheet.

**Contact factory for dice specifications.*
***Contact factory for availability.*

Pin Configurations

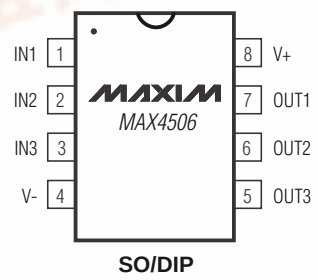

Pin Configurations continued at end of data sheet.

pdf.dzsc.com
For free samples & the latest literature: http://www.maxim-ic.com, or phone 1-800-998-8800.

Fault-Protected, High-Voltage Signal-Line Protectors

ABSOLUTE MAXIMUM RATINGS

(Voltages Referenced to GND)
V+ .....-0.3V to +44.0V
V- .....-44.0V to +0.3V
V+ to V-.....-0.3V to +44.0V
IN_ or OUT_ .....±44V
IN_ Overvoltage with Power On.....±36V
IN_ Overvoltage with Power Off.....±40V
Continuous Current into Any Terminal.....±30mA
Peak Current into Any Terminal
(pulsed at 1ms, 10% duty cycle).....±70mA
Continuous Power Dissipation (T_A = +70°C)
8-Pin Narrow SO (derate 5.88mW/°C above +70°C) 471mW
8-Pin Plastic DIP (derate 9.09mW/°C above +70°C).....727mW
8-Pin CERDIP (derate 8.00mW/°C above +70°C) 640mW
18-Pin Wide SO (derate 9.52mW/ °C above +70°C) 762mW
18-Pin Plastic DIP (derate 11.11mW/ °C above +70°C) ...889mW
18-Pin CERDIP (derate 10.53mW/ °C above +70°C) 842mW
20-Pin SSOP (derate 11.11mW/°C above +70°C).....640mW
Operating Temperature Ranges
MAX4506C_A /MAX4607C_ _.....0°C to +70°C
MAX4506E_A/MAX4607E_ _ .....-40°C to +85°C
MAX4506MJA/MAX4607MJN .....-55°C to +125°C
Storage Temperature Range .....-65°C to +160°C
Lead Temperature (soldering, 10sec) .....+300°C

RECOMMENDED OPERATING GUIDELINES

V+ to GND .....-0.3V to +40V
V- to GND .....-32V to +0.3V
V+ to V- 40V
IN_.....±40V
OUT_ .....V+ to V-
IN_ to OUT_.....40V Differential
Continuous Current into Any Terminal .....≤30mA
Peak Current into Any Terminal
(pulsed at 1ms, 10% duty cycle) .....≤70mA

Note 1: OUT_ pins are not fault protected. Signals on OUT_ exceeding V+ or V- are clamped by internal diodes. Limit forward-diode current to maximum current rating.

Note 2: IN_ pins are fault protected. Signals on IN_ exceeding -36V to +36V may damage the device. These limits apply with power applied to V+ or V-, or ±40V with V+ = V- = 0.

Stresses beyond those listed under "Absolute Maximum Ratings" may cause permanent damage to the device. These are stress ratings only, and functional operation of the device at these or any other conditions beyond those indicated in the operational sections of the specifications is not implied. Exposure to absolute maximum rating conditions for extended periods may affect device reliability.

ELECTRICAL CHARACTERISTICS

(V+ = +15V, V- = -15V, T_A = T_{MIN} to T_{MAX}, unless otherwise noted. Typical values are at T_A = +25°C.) (Note 3)

PARAMETER	SYMBOL	CONDITIONS		T_A	MIN	TYP	MAX	UNITS
ANALOG SWITCH								
Fault-Free Analog Signal Range (Note 4)	$V_{IN_}$	V+ = +15V, V- = -15V, $V_{IN_}$ = ±15V		C, E, M	V-		V+	V
Analog Signal-Path Resistance	R_{ON}	$V_{IN_}$ = ±10V, $I_{OUT_}$ = 1mA		+25°C		65	100	Ω
				C, E			125	
				M			150	
Signal-Path Resistance Match (Note 6)	ΔR_{ON}	$V_{IN_}$ = $V_{OUT_}$ = ±10V, I_{OUT} = 1mA		+25°C		1	7	Ω
				C, E			10	
				M			12	
Signal-Path Leakage Current (Note 7)	I_{OUT_ON}	$V_{OUT_}$ = ±10V, $V_{IN_}$ = ±10V or floating		+25°C	-0.5		0.5	nA
				C, E	-20		20	
				M	-400		400	
Input Capacitance	C_{IN}	V_{IN} = 0, f = 1MHz		+25°C		20		pF
FAULT PROTECTION								
Fault-Protected Analog Signal Range	$V_{IN_}$	(Notes 2, 3)	Applies with power on	C, E, M	-36		36	V
			Applies with power off	C, E, M	-40		40	
Input Signal-Path Leakage Current, Supplies On	$I_{IN_}$	$V_{IN_}$= ±25V, $V_{OUT_}$ = open		+25°C	-20	0.1	20	nA
				C, E	-200		200	
				M	-10		10	μA

ELECTRICAL CHARACTERISTICS —Dual Supplies (continued)

($V+ = +15V$, $V- = -15V$, $T_A = T_{MIN}$ to T_{MAX}, unless otherwise noted. Typical values are at TA = +25°C.) (Note 3)

PARAMETER	SYMBOL	CONDITIONS		T_A	MIN	TYP	MAX	UNITS
Input Signal-Path Leakage Current, Supplies Off	$I_{IN_}$	$V_{IN_}$ = ±40V, $V_{OUT_}$ = open, V+ = 0, V- = 0		+25°C	-20	0.2	20	nA
				C, E	-500		500	
				M	-10		10	µA
Output Clamp Current, Supplies On	$I_{OUT_}$	$V_{IN_}$ = +25V		+25°C	13	19	26	mA
		$V_{IN_}$ = -25V		+25°C	-26	-19	-13	
Output Clamp Resistance, Supplies On	$R_{OUT_}$	I_{OUT} = 1mA	$V_{IN_}$ = +25V	+25°C		0.5	1.0	kΩ
			$V_{IN_}$ = -25V	+25°C		0.4	1.0	
± Fault Output Turn-On Delay Time (Note 5)		R_L = 10kΩ, $V_{IN_}$ = ±25V		+25°C		10		ns
± Fault Recovery Time (Note 5)		R_L = 10kΩ, $V_{IN_}$ = ±25V		+25°C		2.5		µs
POWER SUPPLY								
Power-Supply Range	V+, V-			C, E, M	±8		±18	V
Power-Supply Current	I+	$V_{IN_}$ = +15V	MAX4506	+25°C		90	150	µA
				C, E			175	
				M			200	
			MAX4507	+25°C		160	250	
				C, E			300	
				M			400	
	I-		MAX4506	+25°C	-150	-90		
				C, E	-175			
				M	-200			
			MAX4507	+25°C	-250	-160		
				C, E	-300			
				M	-400			

ELECTRICAL CHARACTERISTICS—Single Supply

($V+ = +12V$, $V- = -0V$, $T_A = T_{MIN}$ to T_{MAX}, unless otherwise noted. Typical values are at T_A = +25°C.) (Note 3)

PARAMETER	SYMBOL	CONDITIONS	T_A	MIN	TYP	MAX	UNITS
ANALOG SWITCH							
Fault-Free Analog Signal Range (Note 4)	$V_{IN_}$	V+ = +12V, V- = 0 $V_{IN_}$ = +12V	C, E, M	0		V+	V
Analog Signal-Path Resistance	R_{ON}	$V_{IN_}$ = +10V, $I_{OUT_}$ = 1mA	+25°C		125	200	Ω
			C, E			250	
			M			300	
Signal-Path Resistance Match (Note 6)	ΔR_{ON}	$V_{IN_}$ = +10V, $I_{OUT_}$ = 1mA	+25°C		3	12	Ω
			C, E			15	
			M			20	
Signal-Path Leakage Current (Note 7)	$I_{OUT_(ON)}$	V_{IN} = +10V or floating	+25°C	-0.5	0.05	0.5	nA
			C, E	-20		20	
			M	-400		400	

Fault-Protected, High-Voltage Signal-Line Protectors

ELECTRICAL CHARACTERISTICS—Single Supply (continued)

($V+ = +12V$, $V- = -0V$, $T_A = T_{MIN}$ to T_{MAX}, unless otherwise noted. Typical values are at $T_A = +25°C$.) (Note 3)

PARAMETER	SYMBOL	CONDITIONS		T_A	MIN	TYP	MAX	UNITS
FAULT PROTECTION								
Fault-Protected Analog Signal Range (Notes 4, 5, 9)	$V_{IN_}$	Applies with power on		C, E, M	-36		36	V
		Applies with power off		C, E, M	-40		40	
Input Signal-Path Leakage Current, Supply On (Note 9)	$I_{IN_}$	$V_{IN_} = \pm25V$, $V_{OUT_} = 0$		+25°C	-20	0.2	20	nA
				C, E	-200		200	
				M	-10		10	µA
Input Signal-Path Leakage Current, Supply Off (Note 9)	$I_{IN_}$	$V_{IN_} = \pm40V$		+25°C	-20	0.2	20	nA
				C, E	-500		500	
				M	-10		10	µA
Output Clamp Current, Supply On	$I_{OUT_}$	$V_{IN_} = 25V$		+25°C	3	5.5	10	mA
Output Clamp Resistance, Supply On	$R_{OUT_}$	$V_{IN_} = \pm25V$		+25°C		1.0	2.5	kΩ
± Fault Output Turn-On Delay Time (Note 5)		$R_L = 10k\Omega$, $V_{IN_} = +25V$		+25°C		10		ns
± Fault Recovery Time (Note 5)		$R_L = 10k\Omega$, $V_{IN_} = +25V$		+25°C		2.5		µs
POWER SUPPLY								
Power-Supply Range	V+			C, E, M	+9		+36	V
Power-Supply Current	I+	$V_{IN_} = +12V$	MAX4506	+25°C		9	25	µA
				C, E			30	
				M			40	
			MAX4507	+25°C		17	40	
				C, E			60	
				M			80	

Note 3: The algebraic convention is used in this data sheet; the most negative value is shown in the minimum column.
Note 4: See Fault-Free Analog Signal Range vs. Supply Voltages graph in the *Typical Operating Characteristics*.
Note 5: Guaranteed by design.
Note 6: $\Delta R_{ON} = R_{ON(MAX)} - R_{ON(MIN)}$
Note 7: Leakage parameters are 100% tested at maximum rated hot temperature and guaranteed by correlation at $T_A = +25°C$.
Note 8: Leakage testing for single-supply operation is guaranteed by testing with dual supplies.
Note 9: Guaranteed by testing with dual supplies.

Typical Operating Characteristics

(T_A = +25°C, unless otherwise noted.)

ON-RESISTANCE vs. OUTPUT VOLTAGE (DUAL SUPPLIES)

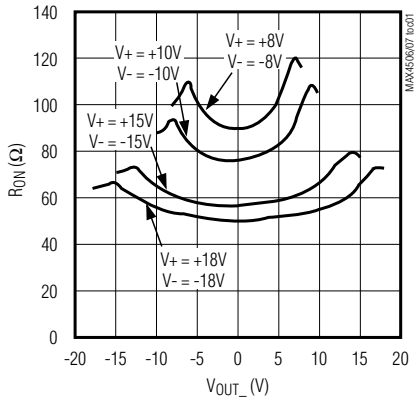

ON-RESISTANCE vs. OUTPUT VOLTAGE (SINGLE SUPPLY)

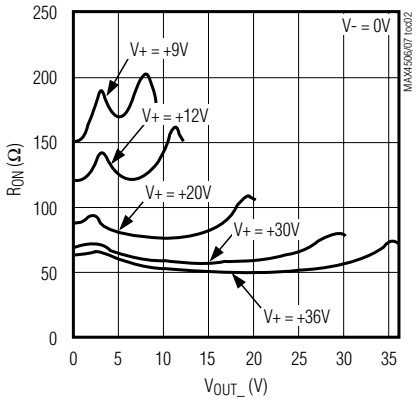

ON-RESISTANCE vs. OUTPUT VOLTAGE AND TEMPERATURE (DUAL SUPPLIES)

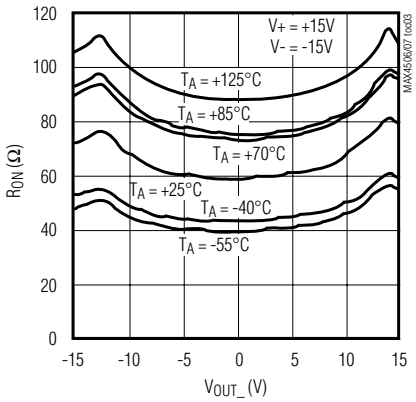

ON-RESISTANCE vs. OUTPUT VOLTAGE AND TEMPERATURE (SINGLE SUPPLY)

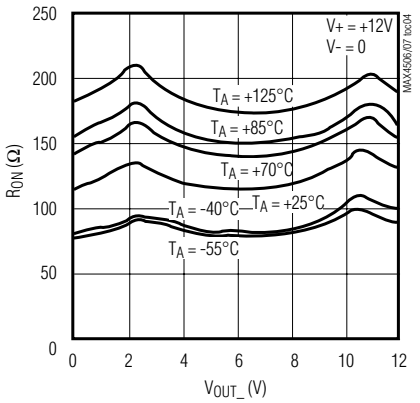

OUTPUT CLAMP RESISTANCE SUPPLIES ON

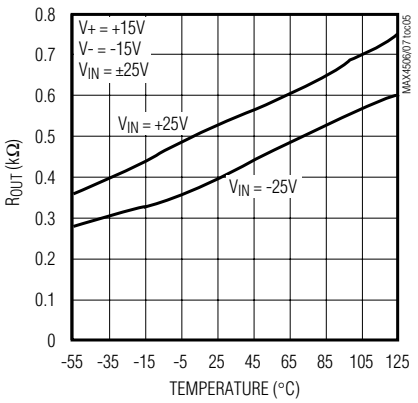

OUTPUT CLAMP CURRENT SUPPLIES ON vs. TEMPERATURE

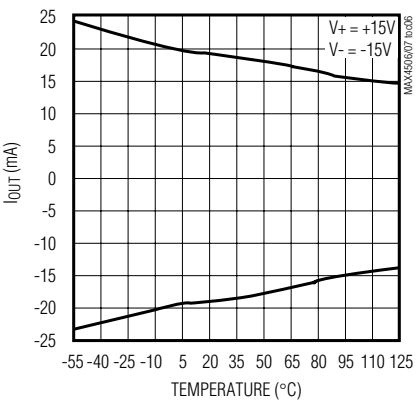

OUTPUT TRANSFER CHARACTERISTICS (DUAL SUPPLIES)

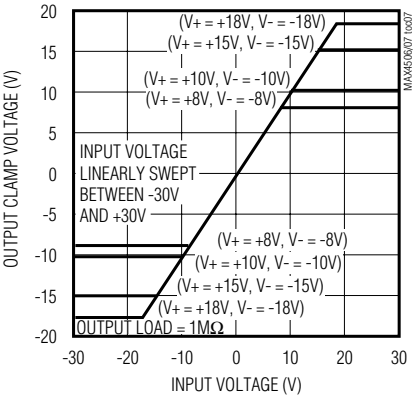

OUTPUT TRANSFER CHARACTERISTICS (SINGLE SUPPLY)

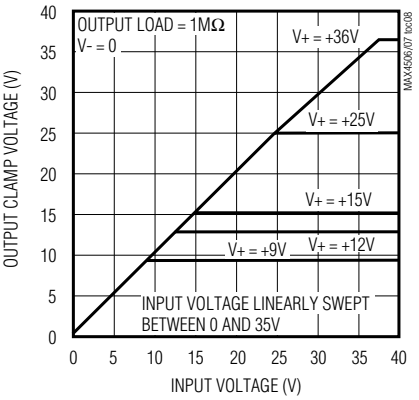

FAULT-FREE ANALOG SIGNAL RANGE vs. SUPPLY VOLTAGE

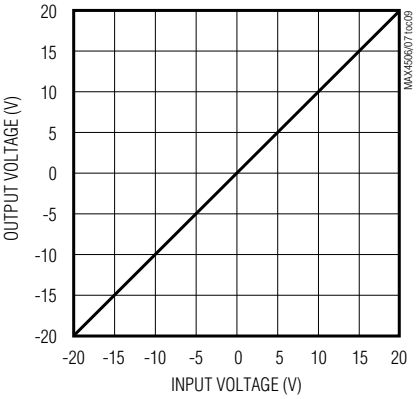

Fault-Protected, High-Voltage Signal-Line Protectors

Typical Operating Characteristics (continued)

(T_A = +25°C, unless otherwise noted.)

FAULT-FREE OUTPUT LEAKAGE CURRENT WITH SUPPLIES ON

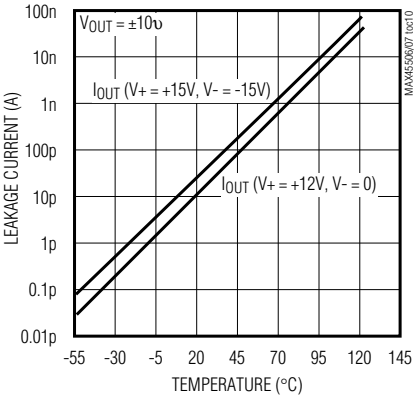

INPUT FAULT LEAKAGE CURRENT WITH SUPPLIES ON

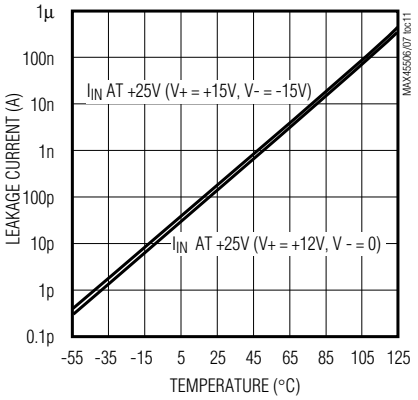

MAX4506 POWER-SUPPLY CURRENT vs. TEMPERATURE

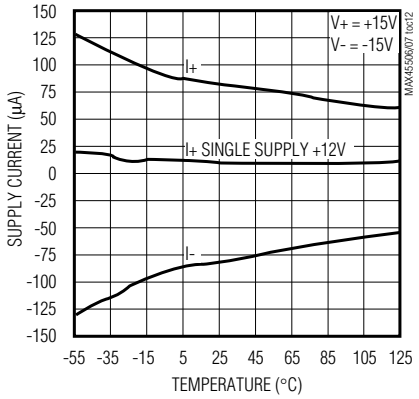

MAX4507 POWER-SUPPLY CURRENT vs. TEMPERATURE

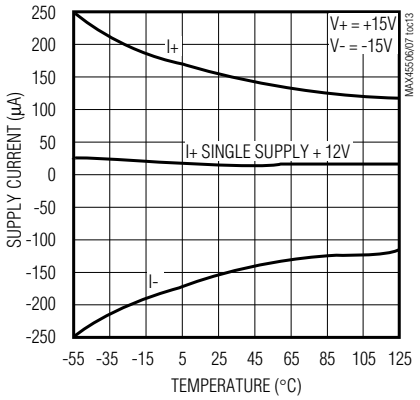

SUPPLY CURRENT vs. INPUT VOLTAGE

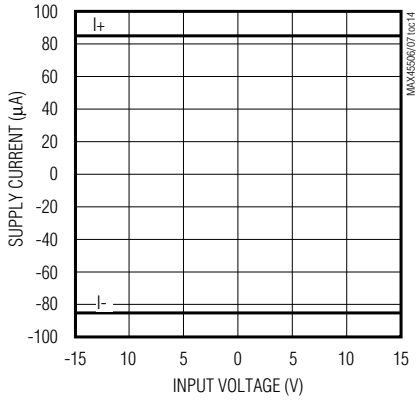

FREQUENCY RESPONSE

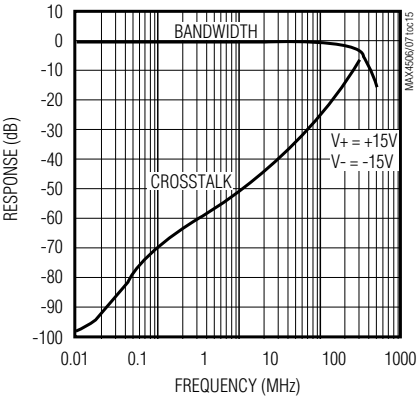

FAULT-FREE SIGNAL PERFORMANCE

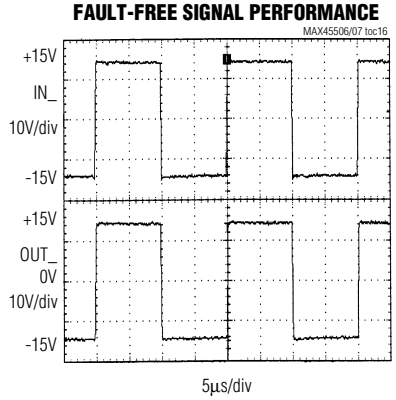

FAULT-FREE RAIL-TO-RAIL SIGNAL HANDLING WITH ±15V SUPPLIES

INPUT OVERVOLTAGE vs. OUTPUT CLAMPING

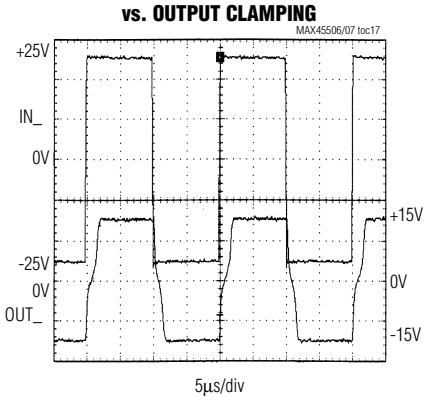

±25V OVERVOLTAGE INPUT WITH THE OUTPUT CLAMPED AT ±15V

FAULT RECOVERY

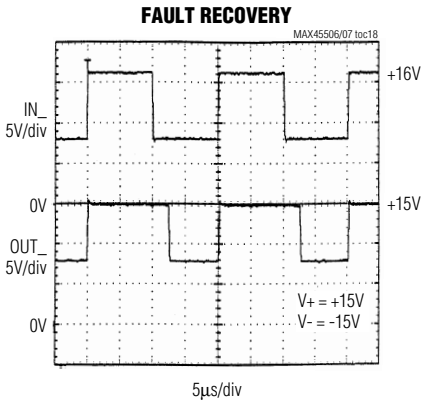

Pin Description

PIN			NAME*	FUNCTION
MAX4506	MAX4507			
8-Pin DIP/SO	18-Pin DIP/SO	20-Pin SSOP		
1, 2, 3	1, 2, 3	1, 2, 4	IN1, IN2, IN3	Signal Inputs 1, 2, 3
–	4–8	5–9	IN4, IN5, IN6, IN7, IN8	Signal Inputs 4, 5, 6, 7, 8
4	9	10	V-	Negative Supply Voltage Input
–	10–14	11–15	OUT8, OUT7, OUT6, OUT5, OUT4	Signal Outputs 8, 7, 6, 5, 4
5, 6, 7	15, 16, 17	16, 17, 19	OUT3, OUT2, OUT1	Signal Outputs 3, 2, 1
8	18	20	V+	Positive Supply-Voltage Input
–	–	3, 18	N.C.	No Connection. Not internally connected.

** Connect all unused inputs to a hard voltage within the supply range (e.g., V+, V-, or GND).*

Detailed Description

The MAX4506/MAX4507 protect other ICs from overvoltage by clamping its output voltage to the supply rails. If the power supplies to the device are off, the device clamps the output to 0V. The MAX4506/MAX4507 provide protection for input signals up to ±36V with the power supplies on and ±40V with the power supplies off.

The MAX4506/MAX4507 protect other integrated circuits connected to its output from latching up. Latchup is caused by parasitic SCR(s) within the IC turning on, and can occur when the supply voltage applied to the IC exceeds the specified operating range. Latchup can also occur when signal voltage is applied before the power-supply voltage. When in a latchup state, the circuit draws excessive current and may continue to draw excessive current even after the overvoltage condition is removed. A continuous latchup condition may damage the device permanently. Such “faults” are commonly encountered in modular control systems where power supplies to interconnected modules may be interrupted and reestablished at random. Faults can happen during production testing, maintenance, start-up, or a power failure.

Figure 1 shows the normal complementary pair (N1 and P1) found in many common analog switches. In addition to these transistors, the MAX4506/MAX4507 also contain comparators and sensing and clamping circuitry to control the state of N1 and P1. During normal operation, N1 and P1 remain on with a typical 65Ω on-resistance between IN and OUT.

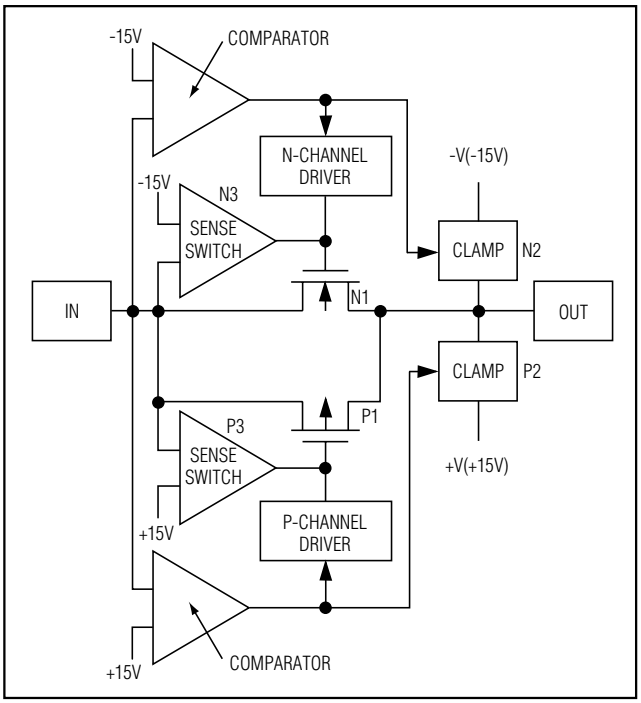

Figure 1. Simplified Internal Structure

The on-board comparators and sensing circuitry monitor the input voltage for possible overvoltage faults.

Fault-Protected, High-Voltage Signal-Line Protectors

Two clamp circuits limit the output voltage to within the supply voltages. When the power supplies are off, any input voltage applied at IN turns off both N1 and P1, and OUT is clamped to 0V.

Normal Operation

When power is applied, each protector acts as a resistor in series with the signal path. Any voltage source on the "input" side of the switch will be conducted through the protector to the output (Figure 2).

When the output load is resistive, it draws current through the protector. The internal resistance is typically less than 100Ω. High-impedance loads are relatively unaffected by the presence of the MAX4506/MAX4507. The protector's path resistance is a function of the supply voltage and the signal voltage (see *Typical Operating Characteristics*).

Fault Protection, Power Off

When power is off (i.e., V+ = V- = 0), the protector is a virtual open circuit. With up to ±40V applied to the input pin, the output pin will be 0V.

Fault Protection, Power On

A fault condition exists when the voltage on the IN_ exceeds either supply rail. This definition is valid when power is on or off, as well as during all states while power ramps up or down.

Applications Information

Supplying Power Through External ICs

The MAX4506/MAX4507 have low supply currents (<250µA), which allows the supply pins to be driven by other active circuitry instead of connected directly to the power sources. In this configuration, the parts can be used as driven fault-protected switches with V+ or V- used as the control pins. For example, with the V- pin grounded, the output of a CMOS gate can drive the V+ pin to turn the device on and off. This can effectively connect and disconnect three (MAX4506) or eight (MAX4507) separate signal lines at once. Ensure that the driving source(s) does not drive the V+ pin more negative than the V- pin.

Figure 3 shows a simple turn-on delay that takes advantage of the MAX4506's low power consumption. The two RC networks cause gradual application of power to the MAX4506, which in turn applies the input signals smoothly after the amplifier has stabilized. The two diodes discharge the two capacitors rapidly when the power turns off. Note that the IC used to supply power to the MAX4506/MAX4507 must be able to supply enough current to maintain the load voltage at the supply rail in a fault condition.

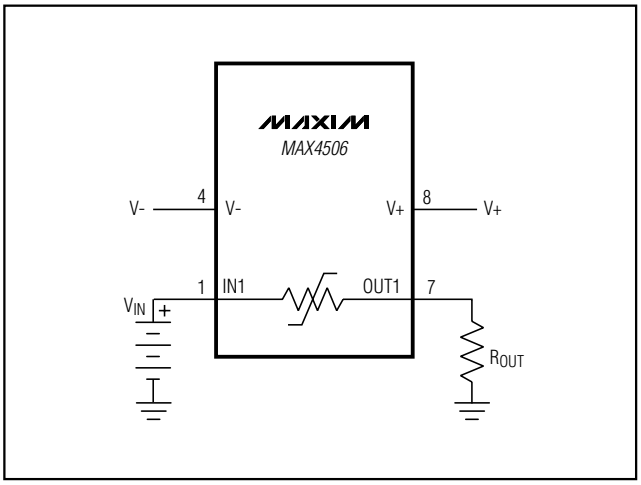

Figure 2. Application Circuit

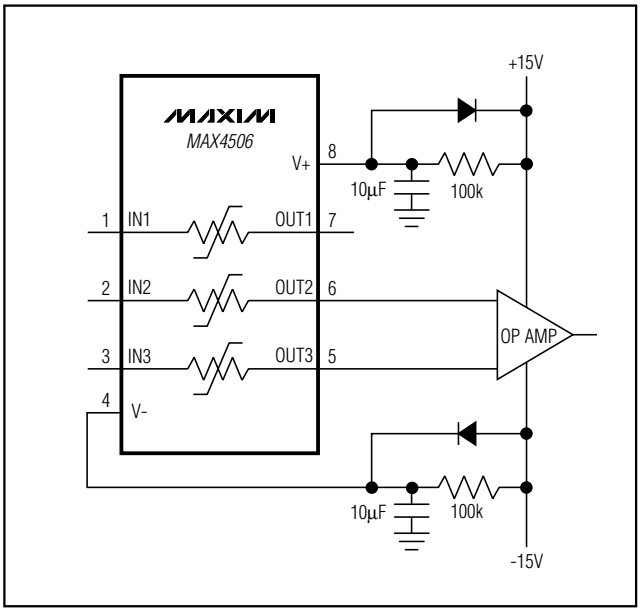

Figure 3. Turn-On Delay

Protectors as Circuit Elements

Each of the protectors in a MAX4506/MAX4507 may be used as a switched resistor, independent of the functions of other elements in the same package. For example, Figure 4 shows a MAX4506 with two of the protectors used to protect the input of an op amp, and the third element used to sequence a power supply. Combining the circuits of Figures 3 and 4 produces a delayed action on the switched +15V, as well as smooth application of signals to the amplifier input.

Figure 5 shows MAX4506 used in front of a MAX338 unprotected 1-to-8 multiplexer. With supplies at ±15V, V_{OUT} of the MAX4506 clamps to ±15V; V_{OUT} of the MAX338 goes to ±14V. With supplies off, V_{OUT} goes to 0V while the inputs remain at ±25V.

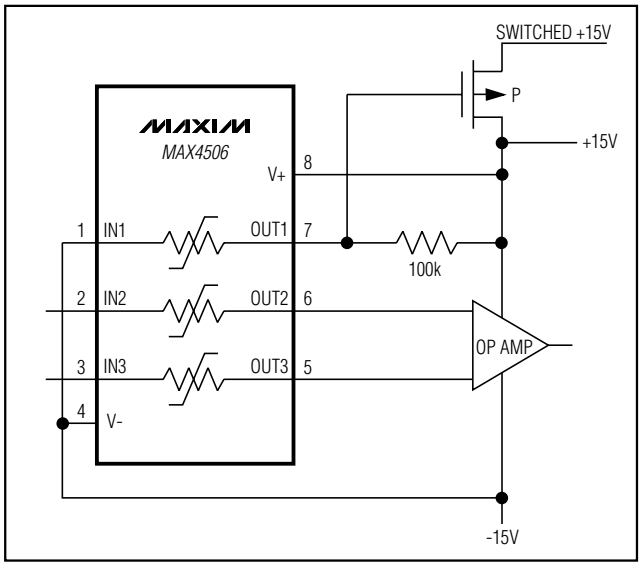

Figure 4. Power-Supply Sequencing

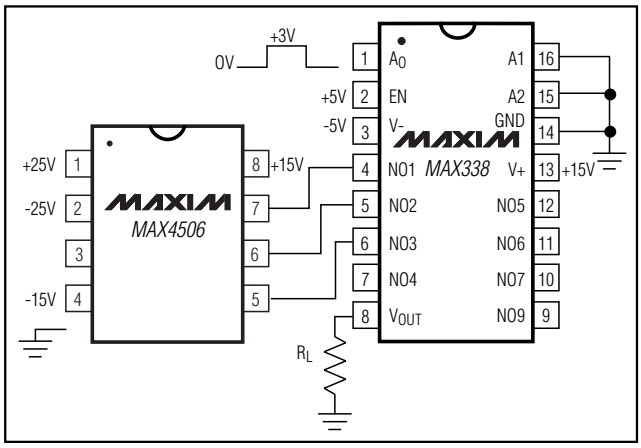

Figure 5. Protecting a MAX338 with a MAX4506

Use the MAX4506 with a MAX338 to enhance voltage handling capability (Figure 6). The MAX4506 and MAX338 share almost equal voltage drops in this configuration. For example, applying ±40V on pins 1 and 2 of the MAX4506 causes a voltage drop of about 26V across pin 1 of the MAX4506 to pin 4 of the MAX338, and a voltage drop of about 28V across pin 4 of the MAX4506 to pin 8 of the MAX338. Similarly, there is a 26V drop from pin 2 of the MAX4506 to pin 5 of the MAX338. The system's performance exceeds each individual part's specification because of shared voltage drops.

Multiplexer and Demultiplexer

As shown in Figure 7, the MAX4506 can be used in series with the output of a MAX4508 (1-to-8 multiplexer) to act as multiplexer or demultiplexer. The MAX4508 is a fault-protected multiplexer whose inputs are designed to interface with harsh environments; however, its common output is not fault protected if connected to outside signals (i.e., demultiplexer use). If the common output can see fault signals, then it needs to be protected, and the MAX4506 can be added to provide complete protection.

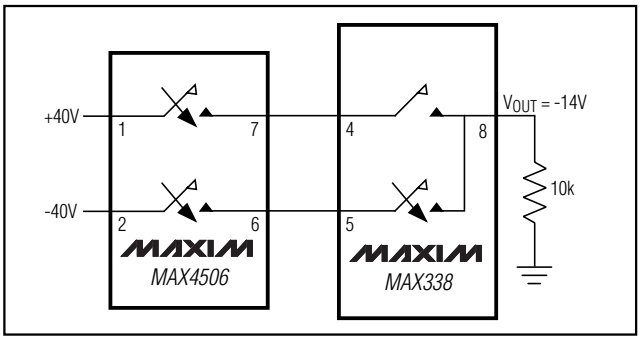

Figure 6. SPDT Switch Application

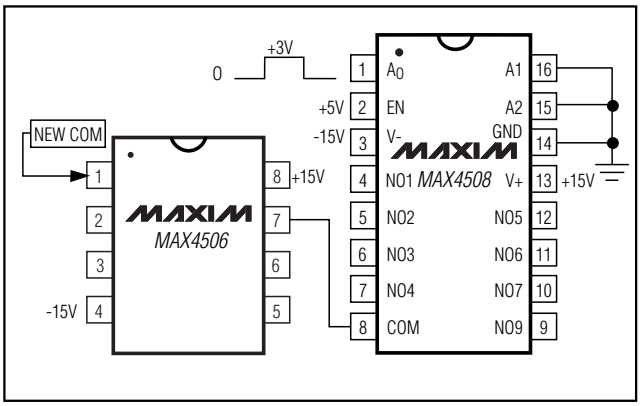

Figure 7. Multiplexer and Demultiplexer Application Using MAX4506 (or MAX4507) with MAX4508

Fault-Protected, High-Voltage Signal-Line Protectors

As seen in Figure 7, the signal input can now be put into pin 1 of the MAX4506 (new common output for system), and outputs can be taken at MAX4508 pins 4 to 7, and 9 to 12. This is the classic demultiplexer operation. This system now has full protection on both of the multiplexers' inputs and outputs.

Measuring Path Resistance

Measuring path resistance requires special techniques, since path resistance varies dramatically with the IN and OUT voltages relative to the supply voltages. Conventional ohmmeters should not be used for the following two reasons: 1) the applied voltage and currents are usually not predictable, and 2) the true resistance is a function of the applied voltage, which is dramatically altered by the ohmmeter itself. Autoranging ohmmeters are particularly unreliable.

Figure 8 shows a circuit that can give reliable results. This circuit uses a 100mV voltage source, a low-voltage-drop ammeter as the measuring circuit, and an adjustable supply to sweep the analog voltage across its entire range. The ammeter must have a voltage drop of less than one millivolt (up to the maximum test current) for accurate results. A Keithley model 617 electrometer has a suitable ammeter circuit, appropriate ranges, and a built-in voltage source designed for this type of measurement. Find the path resistance by setting the analog voltage, measuring the current, and calculating the path resistance. Repeat the procedure at each analog and supply voltage.

Note: It is important to use a voltage source of 100mV or less. As shown in Figure 8, this voltage and the V_{IN} voltage form the V_{OUT} voltage. Using higher voltages could cause OUT to go into a fault condition prematurely.

High-Voltage Surge Suppression

These devices are not high-voltage arresters, nor are they substitutes for surge suppressors. However, the MAX4506/MAX4507 can fill a vital gap in systems that use these forms of protection (Figure 9). Although surge suppressors are extremely fast shunt elements, they have very soft current knees. Their clamp voltage must be chosen well above the normal signal levels, because they have excessive leakage currents as the analog signal approaches the knee. This leakage current can interfere with normal operation when signal levels are low or impedance is high. If the clamp voltage is too high, the input can be damaged.

Connecting a MAX4506/MAX4507 after a surge suppressor allows the surge-suppressor voltage to be set above the supply voltage (but within the overvoltage limits), dramatically reducing leakage effects (Figure 9). During a surge, the surge suppressor clamps the input voltage roughly to the ±10V supplies.

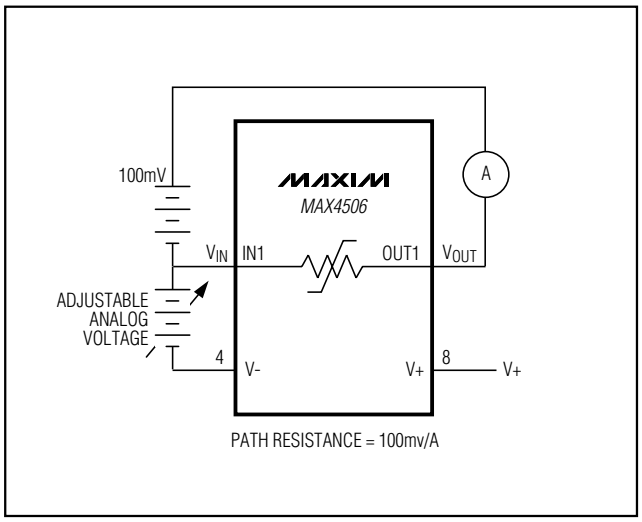

Figure 8. Path-Resistance Measuring Circuit

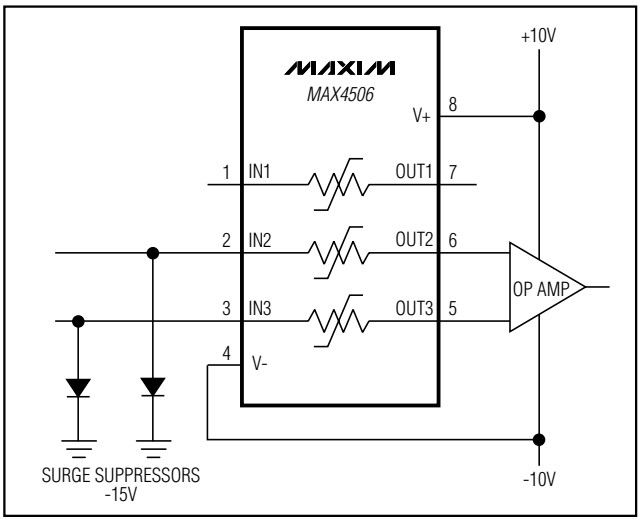

Figure 9. Surge-Suppression Circuit

Ordering Information (continued)

PART	TEMP. RANGE	PIN-PACKAGE
MAX4507CAP	0°C to +70°C	20 SSOP
MAX4507CWN	0°C to +70°C	18 SO
MAX4507CPN	0°C to +70°C	18 Plastic DIP
MAX4507C/D	0°C to +70°C	Dice*
MAX4507EAP	-40°C to +85°C	20 SSOP
MAX4507EWN	-40°C to +85°C	18 SO
MAX4507EPN	-40°C to +85°C	18 Plastic DIP
MAX4507MJN	-55°C to +125°C	18 CERDIP**

**Contact factory for dice specifications.*
***Contact factory for availability.*

Chip Topographies

MAX4506

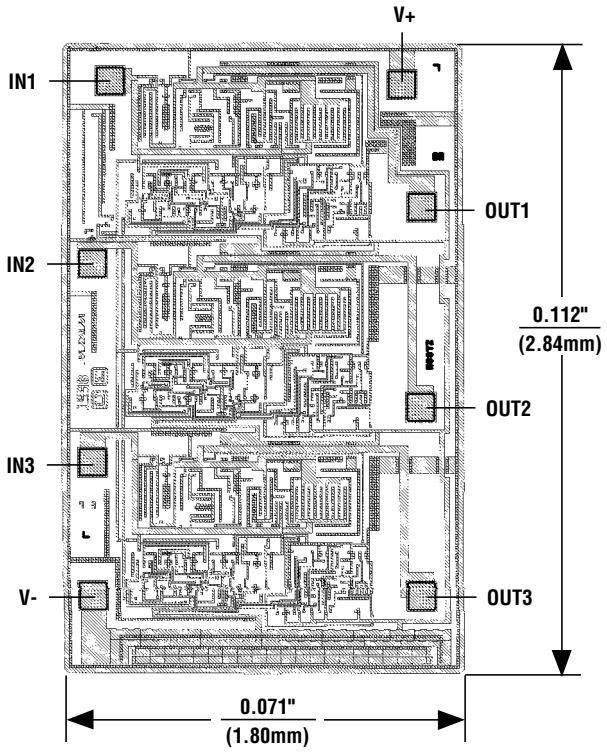

MAX4507

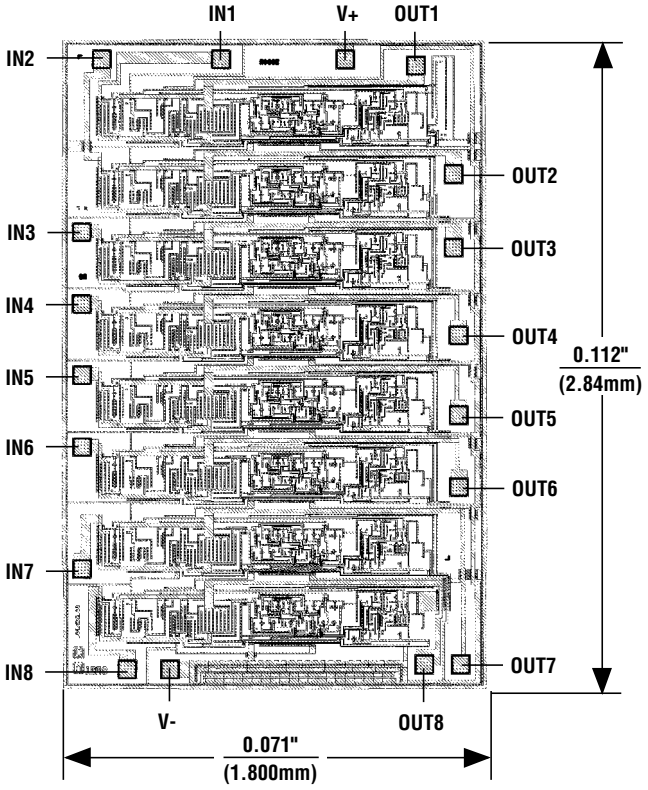

TRANSISTOR COUNT:
144 (MAX4506)
379 (MAX4507)
SUBSTRATE CONNECTED TO V+

Fault-Protected, High-Voltage Signal-Line Protectors

Pin Configurations (continued)

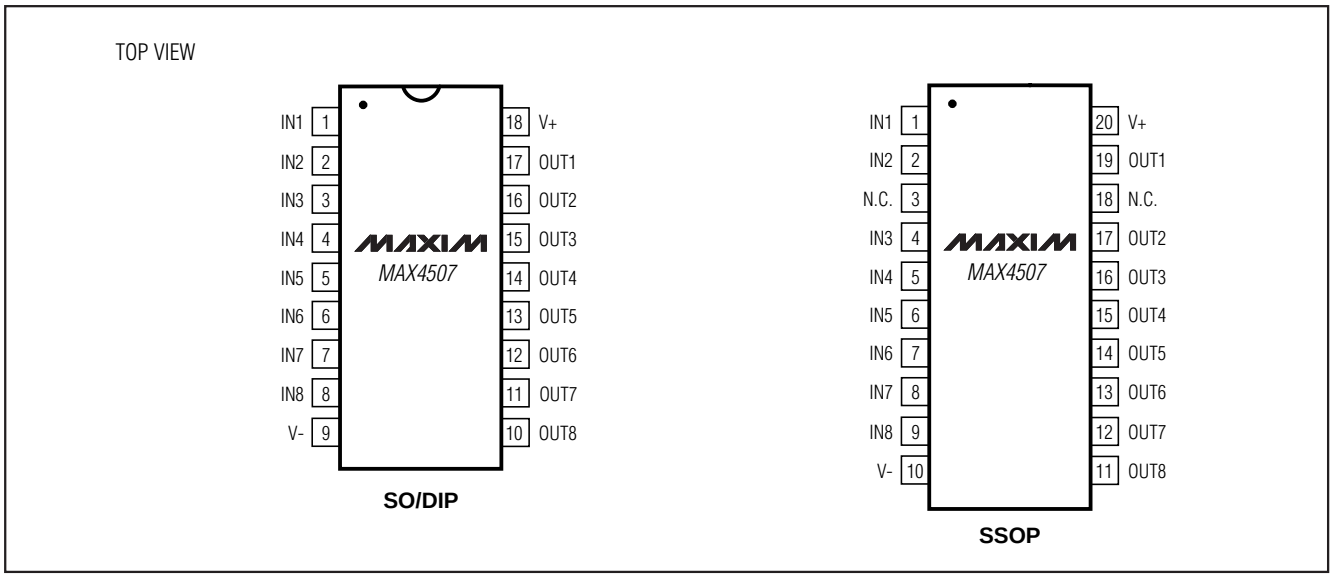

Package Information

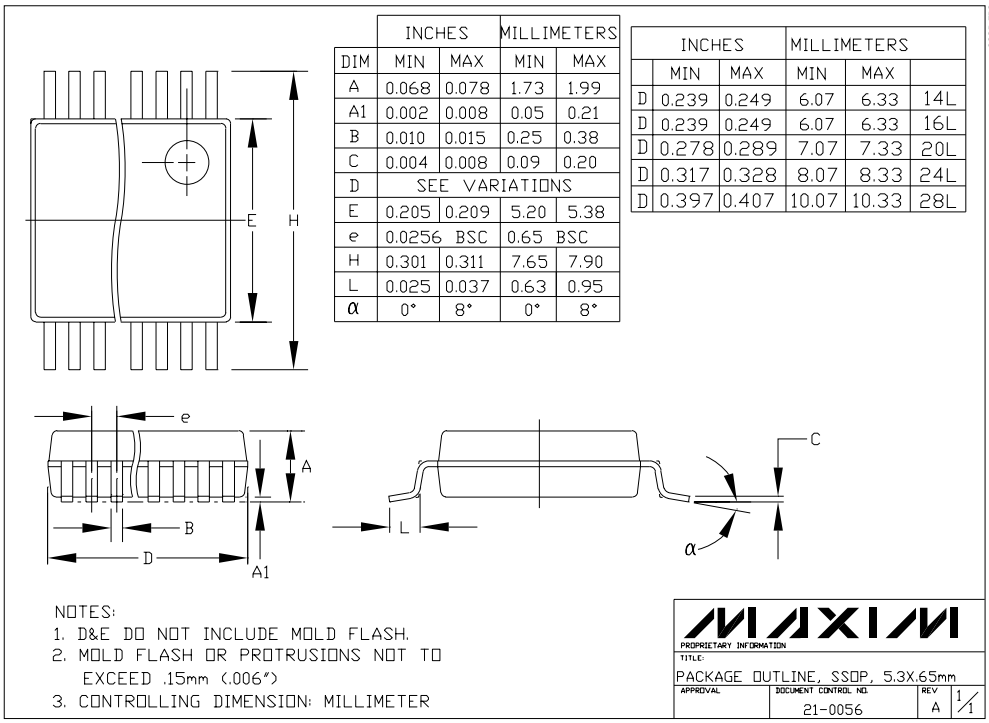

DIM	INCHES MIN	INCHES MAX	MILLIMETERS MIN	MILLIMETERS MAX
A	0.068	0.078	1.73	1.99
A1	0.002	0.008	0.05	0.21
B	0.010	0.015	0.25	0.38
C	0.004	0.008	0.09	0.20
D	SEE VARIATIONS			
E	0.205	0.209	5.20	5.38
e	0.0256 BSC		0.65 BSC	
H	0.301	0.311	7.65	7.90
L	0.025	0.037	0.63	0.95
α	0°	8°	0°	8°

	INCHES MIN	INCHES MAX	MILLIMETERS MIN	MILLIMETERS MAX	
D	0.239	0.249	6.07	6.33	14L
D	0.239	0.249	6.07	6.33	16L
D	0.278	0.289	7.07	7.33	20L
D	0.317	0.328	8.07	8.33	24L
D	0.397	0.407	10.07	10.33	28L

Maxim cannot assume responsibility for use of any circuitry other than circuitry entirely embodied in a Maxim product. No circuit patent licenses are implied. Maxim reserves the right to change the circuitry and specifications without notice at any time.

© 1999 Maxim Integrated Products Printed USA MAXIM is a registered trademark of Maxim Integrated Products.