This material and the information herein is the property of Fuji Electric Co.,Ltd. They shall be neither reproduced, copied, lent, or disclosed in any way whatsoever for the use of any third party nor used for the manufacturing purposes without the express written consent of Fuji Electric Co.,Ltd.

SPECIFICATION

Device Name	:	IGBT-IPM
Type Name	:	6MBP20RY060
Spec. No.	:	MS6M0363

Fuji Electric Co.,Ltd.
Matsumoto Factory

	DATE	NAME	APPROVED
DRAWN	Jul.-3-'98	T. Kajiwara	
CHECKED	Jul. 3, '98	S. Kobayashi	S.K

Fuji Electric Co.,Ltd.

DWG.NO. MS6M0363 1/11 a b c

Revised Record

Date	Classification	Ind.	Content	Applied Date	Drawn	Checked	Approved
Jul. 3 '98	Enactment	—	———	Issued Date	T. Ulaymaan	S. Kobayashi	S.K
Sep.-29 -'98	Revision	a	Addition, packing spec. 4/4 Revision. outline 3/4	Sep.-29 -'98	T. Ulaymaan	A. Nishiura	S. Kobayashi
Nov.-10 -'98	Correction	b	Correction errors in writing Addition plating spec.	Nov.-10 -'98	T. Ulaymaan	A. Nishiura	S.K
Feb-23 -'99	Revision	c	Revision: Size of packing box Correction: Errors in writing	Feb-23 -'99	T. Ulaymaan	Nishiura	S.K

This material and the information herein is the property of Fuji Electric Co.,Ltd. They shall be neither reproduced, copied, lent, or disclosed in any way whatsoever for the use of any third party nor used for the manufacturing purposes without the express written consent of Fuji Electric Co.,Ltd.

1. Outlines（ 外形図）

Dimensions in mm

注 1. □は理論寸法を表す。

Notes "□" means theoretical dimensions.

2. 端子ピッチは根元寸法とする。
The dimensions of the terminals are defined at the botom.

3. （ ）内は、参考寸法とする。
The dimensins in ( ) means referential values.

4. 端子：金メッキ
Tarminals : Gold plating

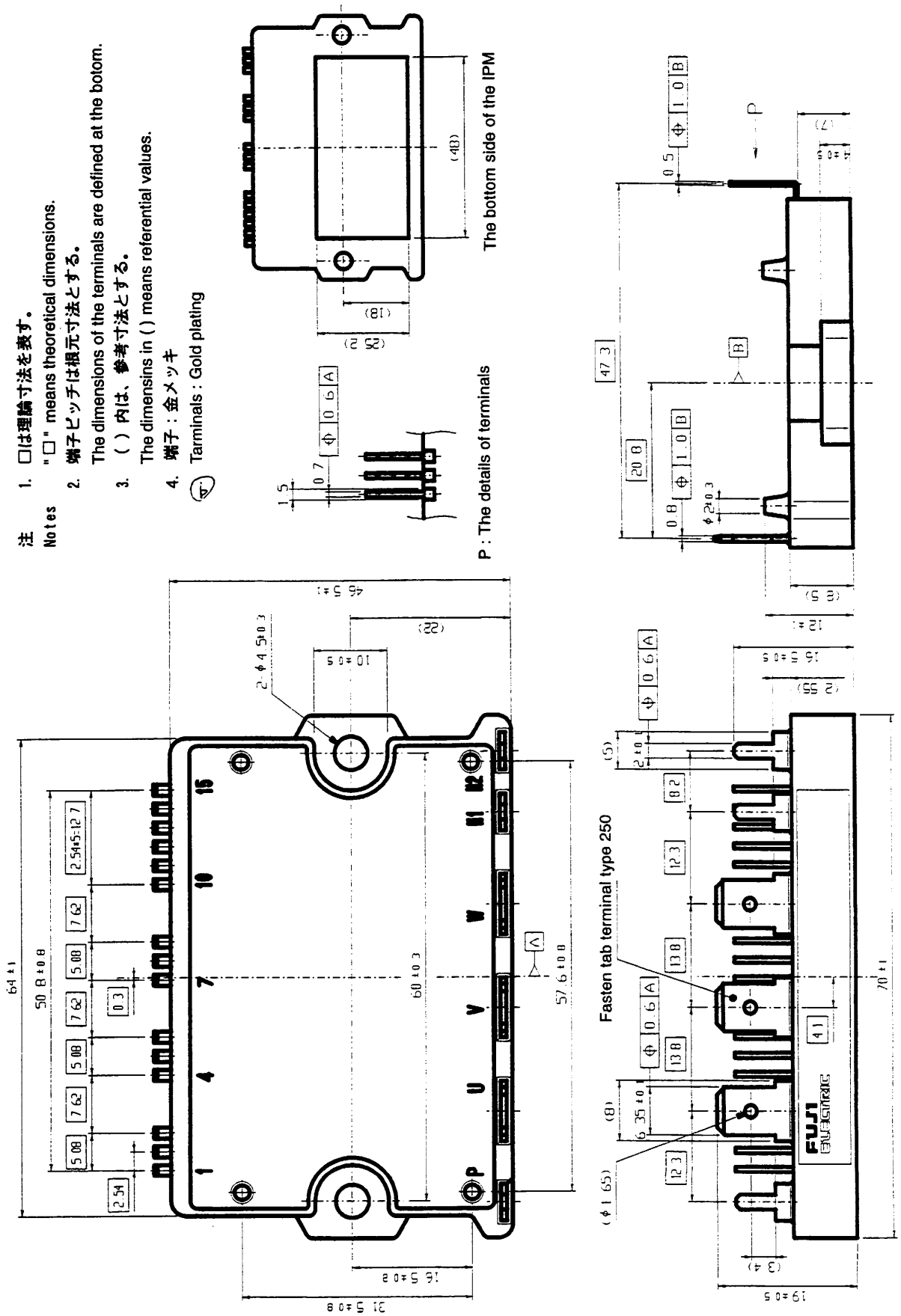

This material and the information herein is the property of Fuji Electric Co.,Ltd. They shall be neither reproduced, copied, lent, or disclosed in any way whatsoever for the use of any third party nor used for the manufacturing purposes without the express written consent of Fuji Electric Co.,Ltd.

2. Block Diagram（ブロック図）

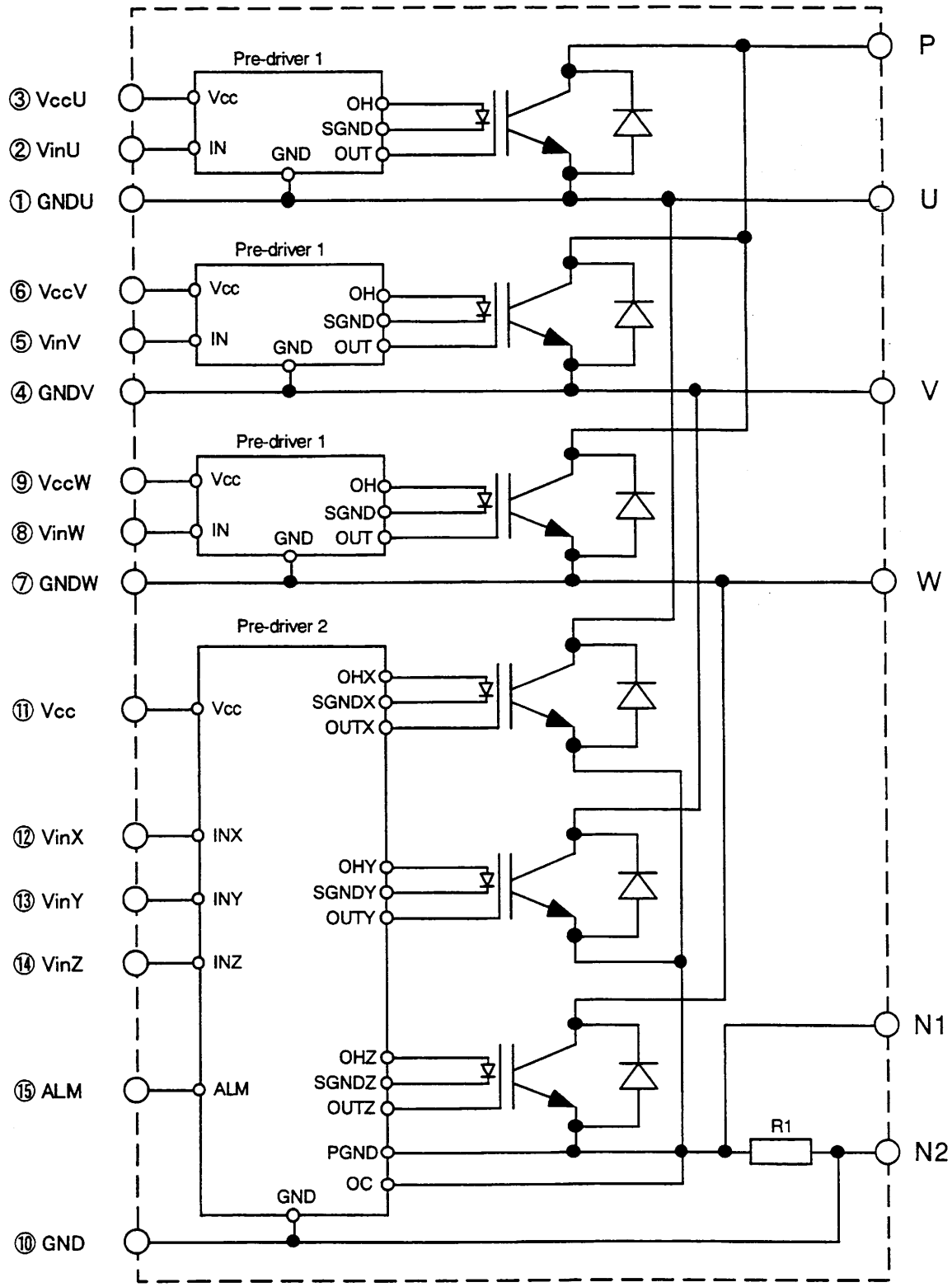

Pre-driver 1 includes following functions. (P-side)
(1) Amplifier for drive
(2) Power supply under voltage protection
(3) IGBT chip over heating protection

Pre-driver 2 includes following functions. (N-side) ⑥
(1) Amplifier for drive
(2) Power supply under voltage protection
(3) IGBT chip over heating protection
(4) Over current protection
(5) Alarm signal output

This material and the information herein is the property of Fuji Electric Co.,Ltd. They shall be neither reproduced, copied, lent, or disclosed in any way whatsoever for the use of any third party nor used for the manufacturing purposes without the express written consent of Fuji Electric Co.,Ltd.

3. Maximum Ratings（最大定格）

(Tc=25°C unless otherwise specified)

Items		Symbols	Ratings	Unit
DC Bus Voltage		V_{DC}	450	V
DC Bus Voltage (surge)		$V_{DC(surge)}$	500	V
DC Bus Voltage (short operating)		V_{SC}	400	V
Collector-Emitter Voltage		V_{CES}	600	V
Collector Current	DC	I_C	20	A
	1ms	I_{CP}	40	A
	Duty=49.6%	$-I_C$	20	A
Collector Power Dissipation	One Transistor	P_C	63	W
Junction Temperature		T_j	150	°C
Input Voltage of Power Supply for Pre-Driver		V_{CC}	-0.3～20	V
Input Signal Current		I_{in}	20	mA
Alarm Signal Voltage		V_{ALM}	Vcc	V
Alarm Signal Current		I_{ALM}	15	mA
Storage Temperature		T_{stg}	-40～125	°C
Operating Case Temperature		T_{cop}	-20～100	°C
Isolating Voltage (Terminal to base,50/60Hz sine wave 1min.)		V_{iso}	AC 2500	V
Screw Torque		Mounting (M4)	2.0	N·m

This material and the information herein is the property of Fuji Electric Co.,Ltd. They shall be neither reproduced, copied, lent, or disclosed in any way whatsoever for the use of any third party nor used for the manufacturing purposes without the express written consent of Fuji Electric Co.,Ltd.

4. Electrical Characteristics（ 電気的特性）

4.1 Electrical Characteristics of Power Circuit（ 主回路部電気的特性）

(Tj=Tc=25℃, Vcc=15V)

Items	Symbols	Conditions	min.	typ.	max.	Unit
Collector Current at off Signal Input	ICES	VCE=600V, Iin=0mA	–	–	1.0	mA
Collector-Emitter Saturation Voltage	VCE(sat)	IC=20A, Iin=10mA	–	–	2.7	V
Forward Voltage of FWD	VF	-IC=20A, Iin=0mA	–	–	3.5	V

4.2 Electrical Characteristics of Control Circuit（ 制御部電気的特性）

(Tj=Tc=25℃, Vcc=15V)

– Items	Symbols	Conditions	min.	typ.	max.	Unit
Power Supply Current of P-line Pre-driver (one unit)	ICCP	Iin=0mA,	–	2.0	5.0	mA
Power Supply Current of N-line Pre-driver	ICCN	Iin=0mA,	–	4.0	10.0	mA
Input Signal Threshold Current	Iin(th)	Turn-on	–	1.8	2.3	mA
		Turn-off	0.8	1.3	–	mA
Hysteresis of Input Signal Theshold Current	IinH	–	–	0.5	–	mA
Input Signal Saturation Voltage	Vin(sat)	Iin=20mA	–	0.8	2.0	V
Over Heating Protection（過熱保護）						
IGBT chips Over HeatProtection Temperature Level	TjOH	Surface of IGBT	150	–	–	℃
Hysteresis	TjH	–	–	20	–	℃
Over Current Protection（過電流保護）						
Collector Current Protection Level	IOC	N-side, (N1-N2 open)	24	30	36	A
	Voc	Between N1 and N2	190	200	210	mV
OC detecting resistor value	Roc		–	6.6	–	mΩ
Protection Delay time	tDOC	Tj=25℃ Fig. 1, Fig. 2	–	5.0	7.0	μs
Power Supply Under Voltage Protection（電源電圧低下保護）						
Under Voltage Protection Level	VUV	–	11.0	–	12.5	V
Hysteresis	VH	–	0.2	–	0.8	V
Alarm Signal Output（アラーム信号出力）						
Alarm Signal Hold Time	tALM	–	1.0	2.0	–	ms

This material and the information herein is the property of Fuji Electric Co.,Ltd. They shall be neither reproduced, copied, lent, or disclosed in any way whatsoever for the use of any third party nor used for the manufacturing purposes without the express written consent of Fuji Electric Co.,Ltd.

5. Switching Characteristics (スイッチング特性)

(Tj=Tc=25℃, Vcc=15V)

Items	Symbols	Conditions	min.	typ.	max.	Unit
Switching Time (IGBT)	ton	Ic=20A, VDC=300V	0.5	-	-	μs
	toff	Iin=10mA	-	-	5.0	μs
Switching Time (FWD)	trr	Inductive-Load, Fig. 3	-	-	0.5	μs

6. Thermal Characteristics (熱特性)

(Tj=Tc=25℃, Vcc=15V)

Items		Symbols	min.	typ.	max.	Unit
Junction to Case Thermal Resistance	IGBT	Rth(j-c)	-	-	2.0	℃/W
	FWD	Rth(j-c)	-	-	3.6	℃/W
Case to Fin Thermal Resistance with Compound		Rth(c-f)	-	0.05	-	℃/W

7. Recommendable Value (推奨値)

Items	Symbols	Conditions	min.	typ.	max.	Unit
DC Bus Voltage	VDC	-	200	-	400	V
Operating Power SupplyVoltage Range of Pre-drive	VCC	-	13.5	15	16.5	V
Input Forward Current	IF	CTR=100～200%	8	-	10	mA
Switching Frequency	fsw	-	1	3	5	kHz
Flatness of heat sink		-	-100	-	100	μm
Mounting Screw Torque (M4)		-	1.3	-	1.7	N・m

b

8. Weight (重量)

Items	Symbols	Conditions	min.	typ.	max.	Unit
Weight	-	-	-	50	-	g

This material and the information herein is the property of Fuji Electric Co.,Ltd. They shall be neither reproduced, copied, lent, or disclosed in any way whatsoever for the use of any third party nor used for the manufacturing purposes without the express written consent of Fuji Electric Co.,Ltd.

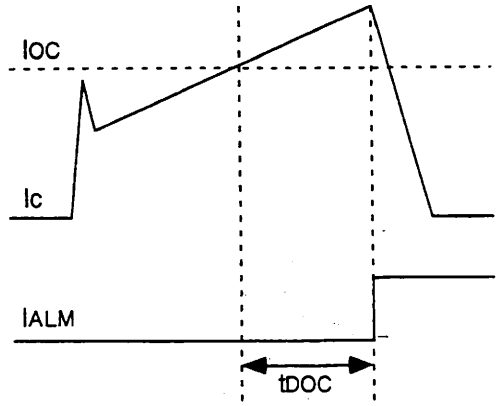

Fig. 1. Definition of OC protection delay time（ 過電流保護遅れ時間の定義）

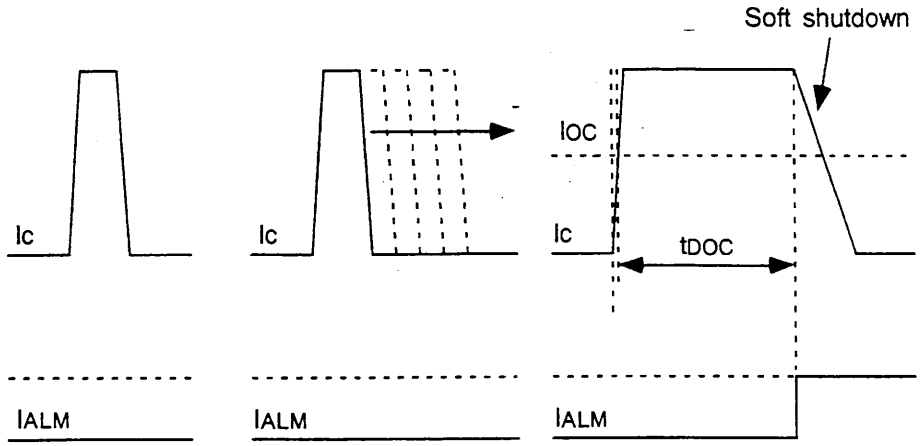

Fig. 2. Definition of protection delay time at short circuit（ 短絡時保護遅れ時間の定義）

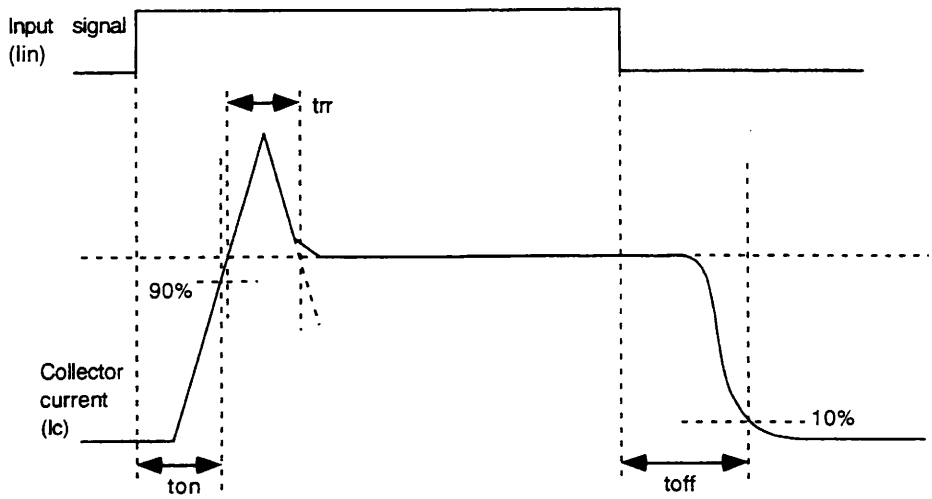

Fig. 3. Definition of switching time（ スイッチング時間の定義）

This material and the information herein is the property of Fuji Electric Co.,Ltd. They shall be neither reproduced, copied, lent, or disclosed in any way whatsoever for the use of any third party nor used for the manufacturing purposes without the express written consent of Fuji Electric Co.,Ltd.

9. Typical Application Circuit（ 応用回路例）

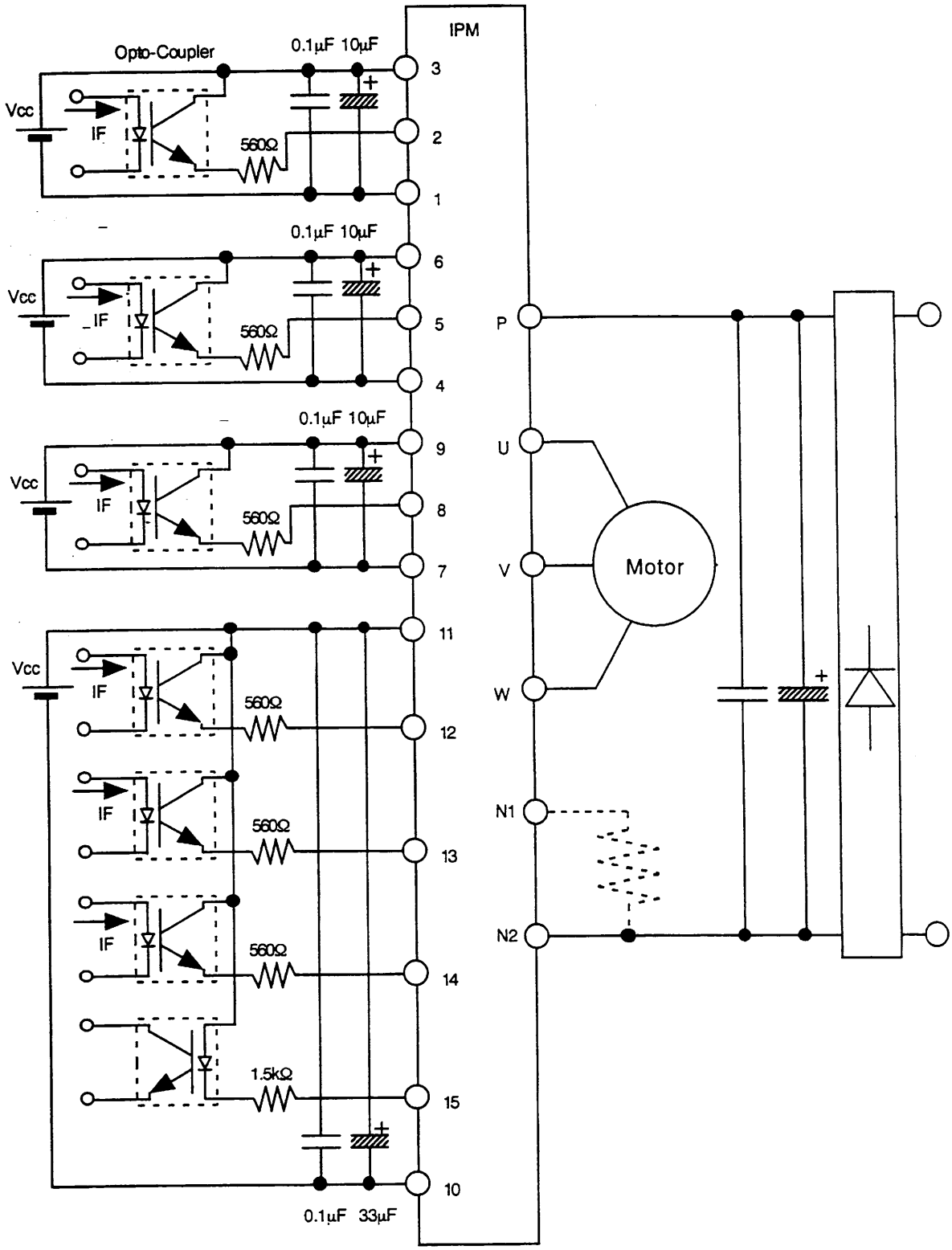

- Recommendale condition of Opto-coupler（ 推奨ホトカプラ使用条件）

CTR Classification	Input Forward Current of Opto-Coupler (IF)
100 - 200 %	8 - 10 mA
80 - 160 %	10 - 12.5 mA

This material and the information herein is the property of Fuji Electric Co.,Ltd. They shall be neither reproduced, copied, lent, or disclosed in any way whatsoever for the use of any third party nor used for the manufacturing purposes without the express written consent of Fuji Electric Co.,Ltd.

10. Application Guideline（ 適用時の注意事項）

- The wiring between the opto-couplers and the input terminals of the IPM should be as short as possible. The stray capacitance between primary and secondary side of the opto-couplers should not be increased by pattern lay-out of the control circuits.

フォトカプラとIPMの入力端子間配線はできるだけ短くし、フォトカプラの1次・2次間の浮遊容量を増加させないパターンレイアウトとしてください。

- Capacitors should be connected between Vcc and GND terminals of the opto-coupler as closely as possible.

フォトカプラのVcc-GND間には、コンデンサをできるだけ近接して取り付けてください。

- Each power supplies for drive circuits should not have transient voltage fluctuation. Four power supplies which are isolated should be applied individually.

各制御電源は瞬時電圧変動の少ない、絶縁されたものを4個独立に使用してください。

- In order to prevent noise from AC line, connect capacitor (approx. 4.7nF) between three-phase line and earth.

ACラインからのノイズの侵入を防ぐため、3相各線—アース間に4.7nF程度のコンデンサを接続してください。

- Do not connect N2-terminal of main circuit to ground (GND) of the control circuit.

入力回路のグランド(GND)と主回路N2端子を接続しないでください。

11. Heat sink mounting precautions（ＩＰＭの取り付け方法）

- A mounting surface of a heat sink should be finished to a roughness below 10μm and a flatness between screw holes below 100μm. If the flatness is below -100μm, a thermal resistance between an IPM and a heat sink is increased. If the flatness is over +100μm, there is the danger of the isolation failure.

ＩＰＭを取り付けるヒートシンク面の仕上げは、粗さ100μｍ以下、ネジ位置間での面の平坦度（反り）100μｍ以内にして下さい。平坦度が-100μｍ以下の場合、ヒートシンクへの接触熱抵抗が増加します。また、平坦度が+100μｍ以上の場合、絶縁破壊を起こす危険性があります。

- Apply a thermal compound between an IPM and a heat sink to reduce a contact thermal resistance.

接触熱抵抗を小さくするために、ＩＰＭとヒートシンクの間にサーマルコンパウンドを塗布して下さい。

- Mount an IPM in parallel with extruded direction of a heat sink to reduce an influence of a change of a heat sink, when a heat sink which is made by an extruder is applied.

押し出し機によって作られたヒートシンクを使用する場合は、ヒートシンクの変形の影響を小さくするためにＩＰＭをヒートシンクの押し出し方向と平行に取り付けて下さい。

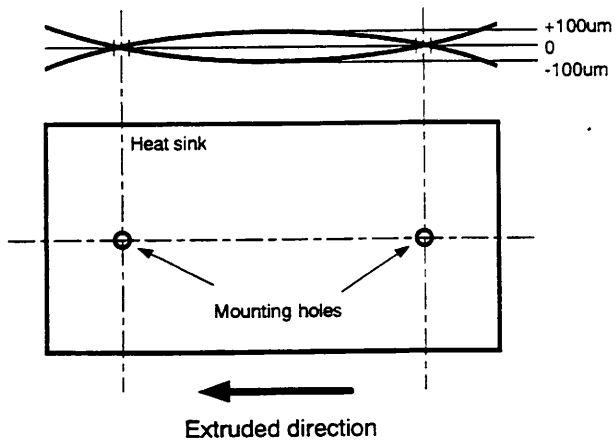

This material and the information herein is the property of Fuji Electric Co.,Ltd. They shall be neither reproduced, copied, lent, or disclosed in any way whatsoever for the use of any third party nor used for the manufacturing purposes without the express written consent of Fuji Electric Co.,Ltd.

12. Packing and indication（ 梱包と表示）

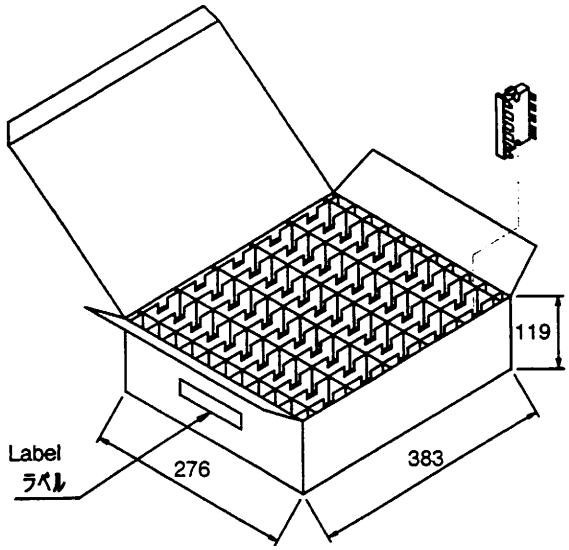

Material	: Corrugated cardbord
材料	ダンボール
Weight	: Approx. 3.1kg (max.)
重量	約3.1kg (最大)
Quantity	: 50pcs (max.)
数量	50個 (最大)

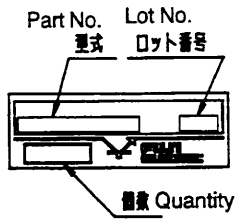

13. Storage and transportation notes（ 保管、運搬上の注意事項）

- The IGBT-IPM should be stored at a standard temperature of 5 to 35℃ and humidity of 45 to 75%.
室内で常温常湿保存が望ましい。（ ５～３５℃、４５～７５％）
- Store modules in a place with few temperature changes in order to avoid condensation on the module surface.
急激な温度変化がないこと。（ モジュール表面が結露しないこと）
- Avoid exposure to corrosive gases and dust.
腐食性ガスの発生場所、塵埃の多い場所は避けること。
- Avoid excessive external force on the modules.
半導体製品に荷重がかからないように注意すること。
- Store modules with unprocessed terminals.
モジュールの端子は未加工の状態で保管すること。
- Don't drop and shock the modules during transportation.
運搬時に衝撃を与えたり落下させないこと。

14. Operation environment（ 使用環境）

- Avoid exposure to corrosive gases.
腐食性ガスの雰囲気での使用は避けること。

15. Applicable category（ 適用範囲）

- This specification is applied to the IGBT-IPM named 6MBP20RY060.
本仕様書は、IGBT-IPM（ 型式: 6MBP20RY060）に適用する。

This material and the information herein is the property of Fuji Electric Co.,Ltd. They shall be neither reproduced, copied, lent, or disclosed in any way whatsoever for the use of any third party nor used for the manufacturing purposes without the express written consent of Fuji Electric Co.,Ltd.