查询74LCX646WMX供应商 捷多邦，专业PCB打样工厂，24小时加急出货

FAIRCHILD SEMICONDUCTOR™

February 1994
Revised March 2001

74LCX646
Low Voltage Octal Transceiver/Register with 5V Tolerant Inputs and Outputs

General Description

The LCX646 consists of registered bus transceiver circuits, D-type flip-flops, and control circuitry providing multiplexed transmission of data directly from the input bus or from the internal storage registers. Data on the A or B bus will be loaded into the respective registers on the LOW-to-HIGH transition of the appropriate pin (CPAB or CPBA) (see Functional Description).

The LCX646 is designed for low voltage (2.5V or 3.3V) V_{CC} applications with capability of interfacing to a 5V signal environment.

The LCX646 is fabricated with an advanced CMOS technology to achieve high speed operation while maintaining CMOS low power dissipation.

Features

- 5V tolerant inputs and outputs
- 2.3V – 3.6V V_{CC} specifications provided
- 7.0 ns t_{PD} max (V_{CC} = 3.3V), 10 µA I_{CC} max
- Power down high impedance inputs and outputs
- Supports live insertion/withdrawal (Note 1)
- ±24 mA output drive (V_{CC} = 3.0V)
- Implements patented noise/EMI reduction circuitry
- Latch-up performance exceeds 500 mA
- ESD performance:
  - Human body model > 2000V
  - Machine model > 200V

Note 1: To ensure the high-impedance state during power up or down, $\overline{OE}$ should be tied to V_{CC} through a pull-up resistor: the minimum value or the resistor is determined by the current-sourcing capability of the driver.

Ordering Code:

Order Number	Package Number	Package Description
74LCX646WM	M24B	24-Lead Small Outline Integrated Circuit (SOIC), JEDEC MS-013, 0.300 Wide
74LCX646MSA	MSA24	24-Lead Shrink Small Outline Package (SSOP), EIAJ TYPE II, 5.3mm Wide
74LCX646MTC	MTC24	24-Lead Thin Shrink Small Outline Package (TSSOP), JEDEC MO-153, 4.4mm Wide

Devices also available in Tape and Reel. Specify by appending the suffix letter "X" to the ordering code.

Connection Diagram

Pin Descriptions

Pin Names	Description
A_0–A_7	Data Register A Inputs
	Data Register A Outputs
B_0–B_7	Data Register B Inputs
	Data Register B Outputs
CPAB, CPBA	Clock Pulse Inputs
SAB, SBA	Transmit/Receive Inputs
$\overline{OE}$	Output Enable Input
DIR	Direction Control Input

© 2001 Fairchild Semiconductor Corporation

找PDF 维库一下 pdf.dzsc.com

Logic Symbols

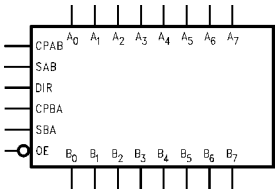

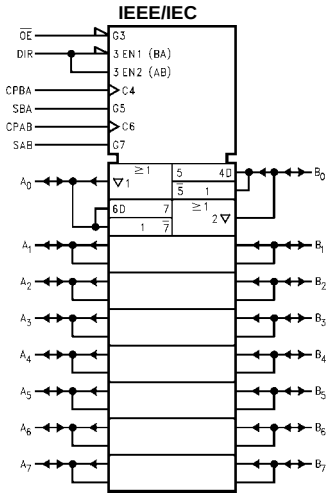

Truth Table

(Note 2)

Inputs						Data I/O		Function
$\overline{OE}$	DIR	CPAB	CPBA	SAB	SBA	A_0–A_7	B_0–B_7	
H	X	H or L	H or L	X	X			Isolation
H	X	↗	X	X	X	Input	Input	Clock A_n Data into A Register
H	X	X	↗	X	X			Clock B_n Data into B Register
L	H	X	X	L	X			A_n to B_n—Real Time (Transparent Mode)
L	H	↗	X	L	X	Input	Output	Clock A_n Data into A Register
L	H	H or L	X	H	X			A Register to B_n (Stored Mode)
L	H	↗	X	H	X			Clock A_n Data into A Register and Output to B_n
L	L	X	X	X	L			B_n to A_n—Real Time (Transparent Mode)
L	L	X	↗	X	L	Output	Input	Clock B_n Data into B Register
L	L	X	H or L	X	H			B Register to A_n (Stored Mode)
L	L	X	↗	X	H			Clock B_n Data into B Register and Output to A_n

H = HIGH Voltage Level
L = LOW Voltage Level
X = Immaterial
↗ = LOW-to-HIGH Transition

Note 2: The data output functions may be enabled or disabled by various signals at the $\overline{OE}$ and DIR inputs. Data input functions are always enabled; i.e., data at the bus pins will be stored on every LOW-to-HIGH transition of the appropriate clock inputs.

Functional Description

In the transceiver mode, data present at the HIGH impedance port may be stored in either the A or B register or both. The select (SAB, SBA) controls can multiplex stored and real-time. The examples shown below demonstrate the four fundamental bus-management functions that can be performed.

The direction control (DIR) determines which bus will receive data when $\overline{OE}$ is LOW. In the isolation mode ($\overline{OE}$ HIGH), A data may be stored in one register and/or B data may be stored in the other register. When an output function is disabled, the input function is still enabled and may be used to store and transmit data. Only one of the two busses, A or B, may be driven at a time.

Real-Time Transfer
Bus B to Bus A

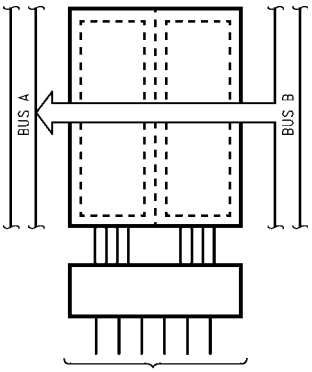

$\overline{OE}$	DIR	CPAB	CPBA	SAB	SBA
L	L	X	X	X	L

Real-Time Transfer
Bus A to Bus B

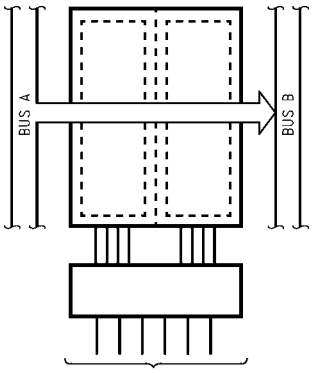

$\overline{OE}$	DIR	CPAB	CPBA	SAB	SBA
L	H	X	X	L	X

Transfer Storage
Data to A or B

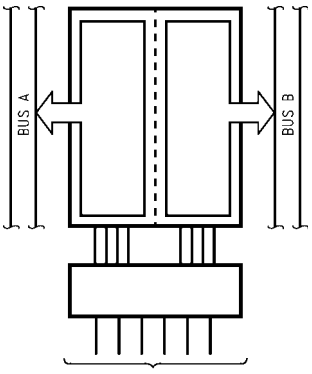

$\overline{OE}$	DIR	CPAB	CPBA	SAB	SBA
L	L	X	H or L	X	H
L	H	H or L	X	H	X

Storage

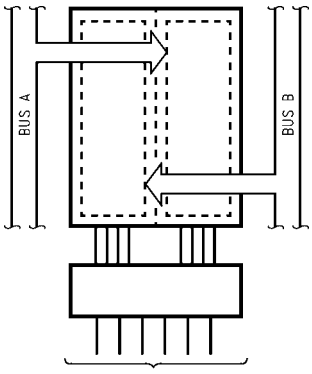

$\overline{OE}$	DIR	CPAB	CPBA	SAB	SBA
L	H	↗	X	L	X
L	L	X	↗	X	L
H	X	↗	X	X	X
H	X	X	↗	X	X

Logic Diagram

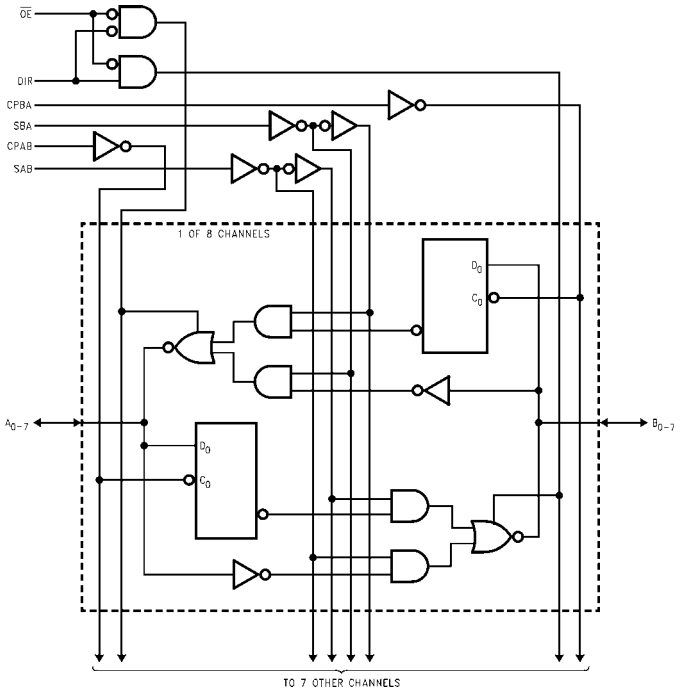

Please note that this diagram is provided only for the understanding of logic operations and should not be used to estimate propagation delays.

Absolute Maximum Ratings (Note 3)

Symbol	Parameter	Value	Conditions	Units
V_{CC}	Supply Voltage	–0.5 to +7.0		V
V_I	DC Input Voltage	–0.5 to +7.0		V
V_O	DC Output Voltage	–0.5 to +7.0 –0.5 to V_{CC} + 0.5	Output in 3-STATE Output in HIGH or LOW State (Note 4)	V
I_{IK}	DC Input Diode Current	–50	V_I < GND	mA
I_{OK}	DC Output Diode Current	–50 +50	V_O < GND V_O > V_{CC}	mA
I_O	DC Output Source/Sink Current	±50		mA
I_{CC}	DC Supply Current per Supply Pin	±100		mA
I_{GND}	DC Ground Current per Ground Pin	±100		mA
T_{STG}	Storage Temperature	–65 to +150		°C

Recommended Operating Conditions (Note 5)

Symbol	Parameter		Min	Max	Units
V_{CC}	Supply Voltage	Operating Data Retention	2.0 1.5	3.6 3.6	V
V_I	Input Voltage		0	5.5	V
V_O	Output Voltage	HIGH or LOW State 3-STATE	0 0	V_{CC} 5.5	V
I_{OH}/I_{OL}	Output Current	V_{CC} = 3.0V – 3.6V V_{CC} = 2.7V – 3.0V V_{CC} = 2.3V – 2.7V		±24 ±12 ±8	mA
T_A	Free-Air Operating Temperature		–40	85	°C
$\Delta t/\Delta V$	Input Edge Rate, V_{IN} = 0.8V – 2.0V, V_{CC} = 3.0V		0	10	ns/V

Note 3: The Absolute Maximum Ratings are those values beyond which the safety of the device cannot be guaranteed. The device should not be operated at these limits. The parametric values defined in the Electrical Characteristics tables are not guaranteed at the Absolute Maximum Ratings. The "Recommended Operating Conditions" table will define the conditions for actual device operation.

Note 4: I_O Absolute Maximum Rating must be observed.

Note 5: Unused inputs or I/Os must be held HIGH or LOW. They may not float.

DC Electrical Characteristics

Symbol	Parameter	Conditions	V_{CC} (V)	T_A = –40°C to +85°C Min	Max	Units
V_{IH}	HIGH Level Input Voltage		2.3 – 2.7	1.7		V
			2.7 – 3.6	2.0		
V_{IL}	LOW Level Input Voltage		2.3 – 2.7		0.7	V
			2.7 – 3.6		0.8	
V_{OH}	HIGH Level Output Voltage	I_{OH} = –100 µA	2.3 – 3.6	V_{CC} – 0.2		V
		I_{OH} = –8 mA	2.3	1.8		
		I_{OH} = –12 mA	2.7	2.2		
		I_{OH} = –18 mA	3.0	2.4		
		I_{OH} = –24 mA	3.0	2.2		
V_{OL}	LOW Level Output Voltage	I_{OL} = 100 µA	2.3 – 3.6		0.2	V
		I_{OL} = 8 mA	2.3		0.6	
		I_{OL} = 12 mA	2.7		0.4	
		I_{OL} = 16 mA	3.0		0.4	
		I_{OL} = 24 mA	3.0		0.55	
I_I	Input Leakage Current	0 ≤ V_I ≤ 5.5V	2.3 – 3.6		±5.0	µA
I_{OZ}	3-STATE I/O Leakage	0 ≤ V_O ≤ 5.5V V_I = V_{IH} or V_{IL}	2.3 – 3.6		±5.0	µA
I_{OFF}	Power-Off Leakage Current	V_I or V_O = 5.5V	0		10	µA

DC Electrical Characteristics (Continued)

Symbol	Parameter	Conditions	V_{CC} (V)	$T_A = -40°C$ to $+85°C$ Min	Max	Units
I_{CC}	Quiescent Supply Current	$V_I = V_{CC}$ or GND	2.3 – 3.6		10	μA
		$3.6V \le V_I, V_O \le 5.5V$ (Note 6)	2.3 – 3.6		±10	
ΔI_{CC}	Increase in I_{CC} per Input	$V_{IH} = V_{CC} - 0.6V$	2.3 – 3.6		500	μA

Note 6: Outputs disabled or 3-STATE only.

AC Electrical Characteristics

Symbol	Parameter	$T_A = -40°C$ to $+85°C$, $R_L = 500\Omega$						Units
		$V_{CC} = 3.3V \pm 0.3V$		$V_{CC} = 2.7V$		$V_{CC} = 2.5V \pm 0.2V$		
		$C_L = 50$ pF		$C_L = 50$ pF		$C_L = 30$ pF		
		Min	Max	Min	Max	Min	Max	
f_{MAX}	Maximum Clock Frequency	150						MHz
t_{PHL}	Propagation Delay	1.5	7.0	1.5	8.0	1.5	8.4	ns
t_{PLH}	Bus to Bus	1.5	7.0	1.5	8.0	1.5	8.4	
t_{PHL}	Propagation Delay	1.5	8.5	1.5	9.5	1.5	10.5	ns
t_{PLH}	Clock to Bus	1.5	8.5	1.5	9.5	1.5	10.5	
t_{PHL}	Propagation Delay	1.5	8.5	1.5	9.5	1.5	10.5	ns
t_{PLH}	Select to Bus	1.5	8.5	1.5	9.5	1.5	10.5	
t_{PZL}	Output Enable Time	1.5	8.5	1.5	9.5	1.5	10.5	ns
t_{PZH}		1.5	8.5	1.5	9.5	1.5	10.5	
t_{PLZ}	Output Disable Time	1.5	8.5	1.5	9.5	1.5	10.5	ns
t_{PHZ}		1.5	8.5	1.5	9.5	1.5	10.5	
t_S	Setup Time	2.5		2.5		4.0		ns
t_H	Hold Time	1.5		1.5		2.0		ns
t_W	Pulse Width	3.3		3.3		4.0		ns
t_{OSHL}	Output to Output Skew		1.0					ns
t_{OSLH}	(Note 7)		1.0					

Note 7: Skew is defined as the absolute value of the difference between the actual propagation delay for any two separate outputs of the same device. The specification applies to any outputs switching in the same direction, either HIGH-to-LOW (t_{OSHL}) or LOW-to-HIGH (t_{OSLH}).

Dynamic Switching Characteristics

Symbol	Parameter	Conditions	V_{CC} (V)	$T_A = 25°C$ Typical	Units
V_{OLP}	Quiet Output Dynamic Peak V_{OL}	$C_L = 50$ pF, $V_{IH} = 3.3V$, $V_{IL} = 0V$	3.3	0.8	V
		$C_L = 30$ pF, $V_{IH} = 2.5V$, $V_{IL} = 0V$	2.5	0.6	
V_{OLV}	Quiet Output Dynamic Valley V_{OL}	$C_L = 50$ pF, $V_{IH} = 3.3V$, $V_{IL} = 0V$	3.3	−0.8	V
		$C_L = 30$ pF, $V_{IH} = 2.5V$, $V_{IL} = 0V$	2.5	−0.6	

Capacitance

Symbol	Parameter	Conditions	Typical	Units
C_{IN}	Input Capacitance	V_{CC} = Open, $V_I = 0V$ or V_{CC}	7	pF
$C_{I/O}$	Input/Output Capacitance	$V_{CC} = 3.3V$, $V_I = 0V$ or V_{CC}	8	pF
C_{PD}	Power Dissipation Capacitance	$V_{CC} = 3.3V$, $V_I = 0V$ or V_{CC}, f = 10 MHz	25	pF

AC LOADING and WAVEFORMS Generic for LCX Family

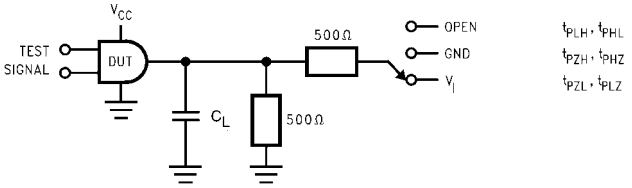

FIGURE 1. AC Test Circuit (C_L includes probe and jig capacitance)

Test	Switch
t_{PLH}, t_{PHL}	Open
t_{PZL}, t_{PLZ}	6V at V_{CC} = 3.3 ± 0.3V V_{CC} x 2 at V_{CC} = 2.5 ± 0.2V
t_{PZH},t_{PHZ}	GND

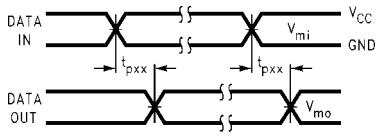

Waveform for Inverting and Non-Inverting Functions

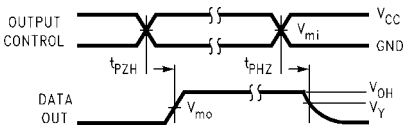

3-STATE Output High Enable and Disable Times for Logic

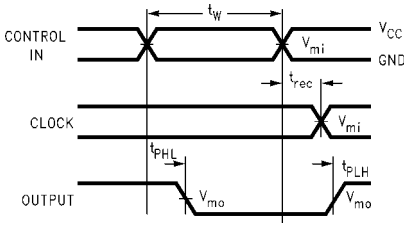

Propagation Delay. Pulse Width and t_{rec} Waveforms

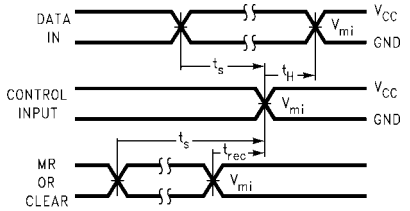

Setup Time, Hold Time and Recovery Time for Logic

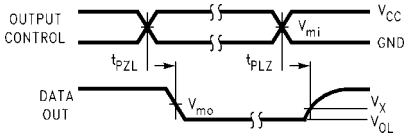

3-STATE Output Low Enable and Disable Times for Logic

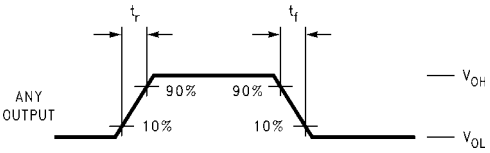

t_{rise} and t_{fall}

FIGURE 2. Waveforms
(Input Characteristics; f =1MHz, t_r = t_f = 3ns)

Symbol	V_{CC}		
	3.3V ± 0.3V	**2.7V**	**2.5V ± 0.2V**
V_{mi}	1.5V	1.5V	V_{CC}/2
V_{mo}	1.5V	1.5V	V_{CC}/2
V_x	V_{OL} + 0.3V	V_{OL} + 0.3V	V_{OL} + 0.15V
V_y	V_{OH} − 0.3V	V_{OH} − 0.3V	V_{OH} − 0.15V

Schematic Diagram Generic for LCX Family

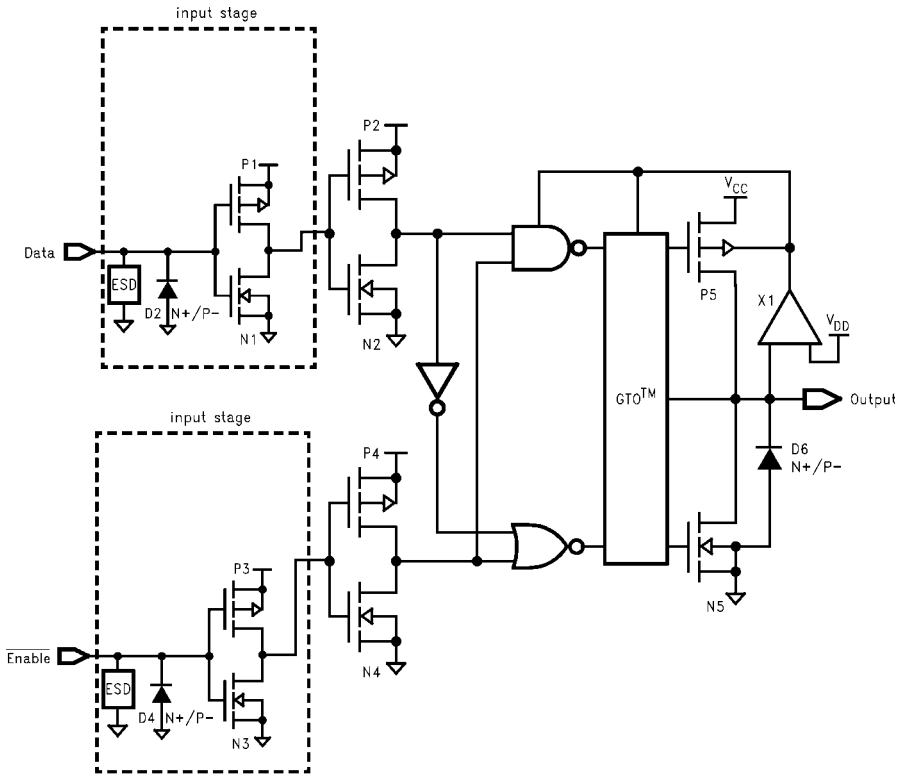

Physical Dimensions inches (millimeters) unless otherwise noted

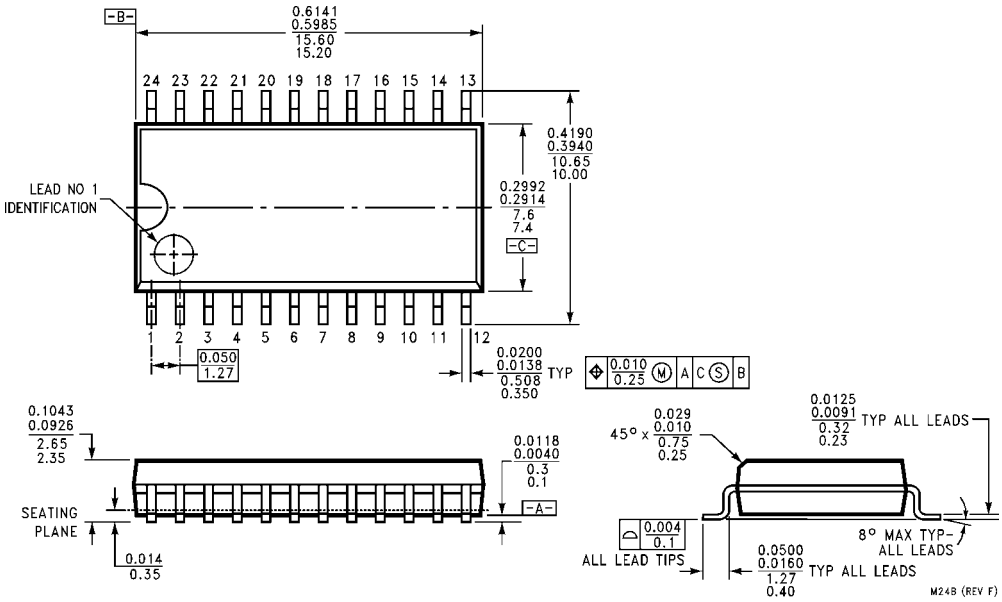

24-Lead Small Outline Integrated Circuit (SOIC), JEDEC MS-013, 0.300 Wide
Package Number M24B

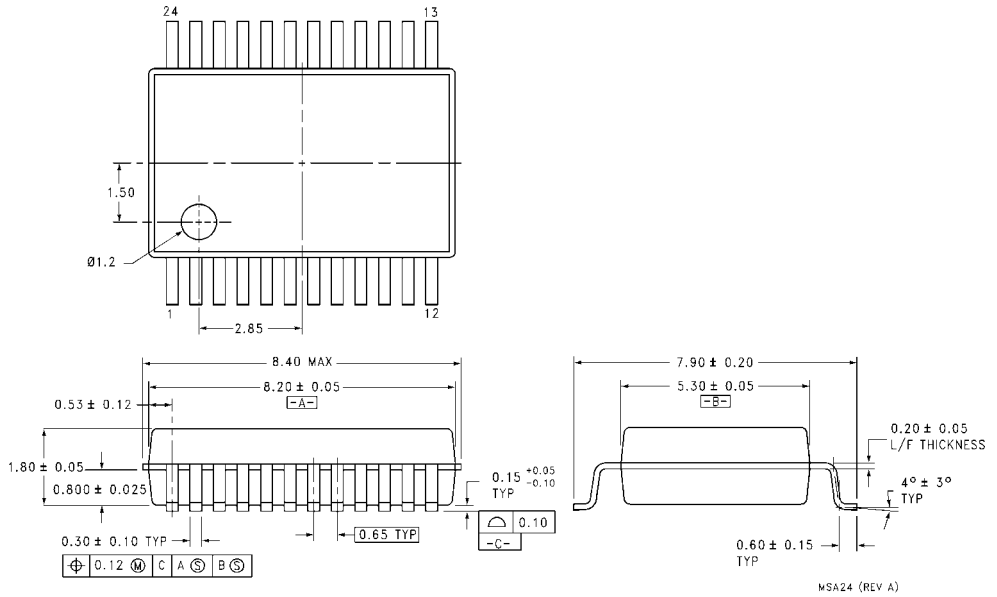

24-Lead Shrink Small Outline Package (SSOP), EIAJ TYPE II, 5.3mm Wide
Package Number MSA24

Physical Dimensions inches (millimeters) unless otherwise noted (Continued)

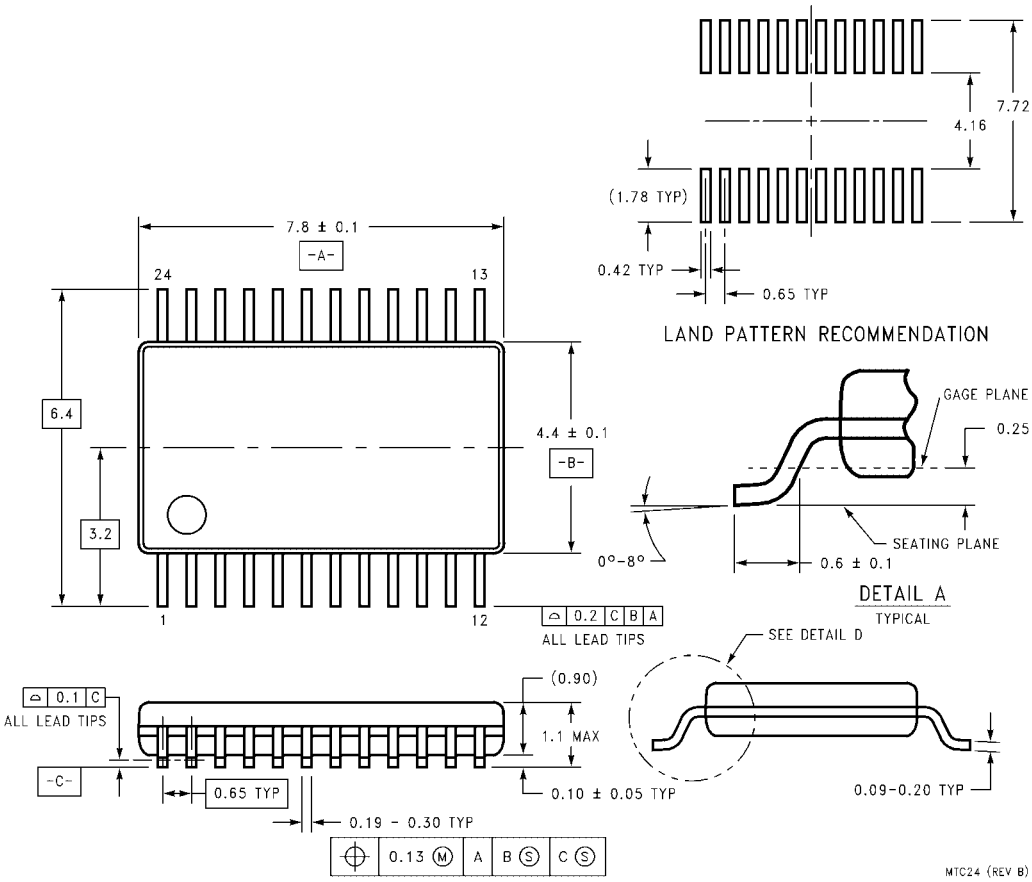

24-Lead Thin Shrink Small Outline Package (TSSOP), JEDEC MO-153, 4.4mm Wide
Package Number MTC24

Fairchild does not assume any responsibility for use of any circuitry described, no circuit patent licenses are implied and Fairchild reserves the right at any time without notice to change said circuitry and specifications.

LIFE SUPPORT POLICY

FAIRCHILD'S PRODUCTS ARE NOT AUTHORIZED FOR USE AS CRITICAL COMPONENTS IN LIFE SUPPORT DEVICES OR SYSTEMS WITHOUT THE EXPRESS WRITTEN APPROVAL OF THE PRESIDENT OF FAIRCHILD SEMICONDUCTOR CORPORATION. As used herein:

1. Life support devices or systems are devices or systems which, (a) are intended for surgical implant into the body, or (b) support or sustain life, and (c) whose failure to perform when properly used in accordance with instructions for use provided in the labeling, can be reasonably expected to result in a significant injury to the user.
2. A critical component in any component of a life support device or system whose failure to perform can be reasonably expected to cause the failure of the life support device or system, or to affect its safety or effectiveness.

www.fairchildsemi.com