查询74F132供应商 捷多邦，专业PCB打样工厂，24小时加急出货

FAIRCHILD SEMICONDUCTOR™

April 1988
Revised July 1999

74F132
Quad 2-Input NAND Schmitt Trigger

General Description

The F132 contains four 2-input NAND gates which accept standard TTL input signals and provide standard TTL output levels. They are capable of transforming slowly changing input signals into sharply defined, jitter-free output signals. In addition, they have a greater noise margin than conventional NAND gates.

Each circuit contains a 2-input Schmitt Trigger followed by level shifting circuitry and a standard FAST™ output structure. The Schmitt Trigger uses positive feedback to effectively speed-up slow input transitions, and provide different input threshold voltages for positive and negative-going transitions. This hysteresis between the positive-going and negative-going input threshold (typically 800 mV) is determined by resistor ratios and is essentially insensitive to temperature and supply voltage variations.

Ordering Code:

Order Number	Package Number	Package Description
74F132SC	M14A	14-Lead Small Outline Integrated Circuit (SOIC), JEDEC MS-120, 0.150 Narrow
74F132SJ	M14D	14-Lead Small Outline Package (SOP), EIAJ TYPE II, 5.3mm Wide
74F132PC	N14A	14-Lead Plastic Dual-In-Line Package (PDIP), JEDEC MS-001, 0.300 Wide

Devices also available in Tape and Reel. Specify by appending the suffix letter "X" to the ordering code.

Logic Symbol

IEEE/IEC

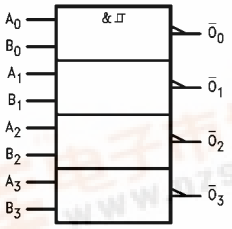

Connection Diagram

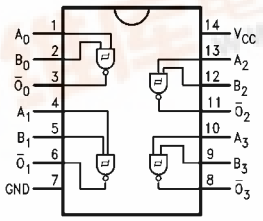

Unit Loading/Fan Out

Pin Names	Description	U.L. HIGH/LOW	Input I_{IH}/I_{IL} Output I_{OH}/I_{OL}
A_n, B_n	Inputs	1.0/1.0	20 µA/–0.6 mA
$\overline{O}_n$	Outputs	50/33.3	–1 mA/20 mA

Function Table

Inputs		Outputs
A	B	$\overline{O}$
L	L	H
L	H	H
H	L	H
H	H	L

H = HIGH Voltage Level
L = LOW Voltage Level

FAST® is a registered trademark of Fairchild Semiconductor Corporation

© 1999 Fairchild Semiconductor Corporation

找PDF 维库一下 pdf.dzsc.com

Absolute Maximum Ratings (Note 1)

Storage Temperature	−65°C to +150°C
Ambient Temperature under Bias	−55°C to +125°C
Junction Temperature under Bias	−55°C to +150°C
V_{CC} Pin Potential to Ground Pin	−0.5V to +7.0V
Input Voltage (Note 2)	−0.5V to +7.0V
Input Current (Note 2)	−30 mA to +5.0 mA
Voltage Applied to Output	
in HIGH State (with V_{CC} = 0V)	
Standard Output	−0.5V to V_{CC}
3-STATE Output	−0.5V to +5.5V
Current Applied to Output	
in LOW State (Max)	twice the rated I_{OL} (mA)
ESD Last Passing Voltage (Min)	4000V

Recommended Operating Conditions

Free Air Ambient Temperature	0°C to +70°C
Supply Voltage	+4.5V to +5.5V

Note 1: Absolute maximum ratings are values beyond which the device may be damaged or have its useful life impaired. Functional operation under these conditions is not implied.

Note 2: Either voltage limit or current limit is sufficient to protect inputs.

DC Electrical Characteristics

Symbol	Parameter		Min	Typ	Max	Units	V_{CC}	Conditions
V_{T+}	Positive-going Threshold		1.5		2.0	V	5.0	
V_{T-}	Negative-going Threshold		0.7		1.1	V	5.0	
ΔV_T	Hysteresis ($V_T^+ - V_T^-$)		0.4			V	5.0	
V_{CD}	Input Clamp Diode Voltage				−1.2	V	Min	I_{IN} = −18 mA
V_{OH}	Output HIGH	10% V_{CC}	2.5			V	Min	I_{OH} = −1 mA
	Voltage	5% V_{CC}	2.7					I_{OH} = −1 mA
V_{OL}	Output LOW Voltage	10% V_{CC}			0.5	V	Min	I_{OL} = 20 mA
I_{IH}	Input HIGH Current				5.0	µA	Max	V_{IN} = 2.7V
I_{BVI}	Input HIGH Current Breakdown Test				7.0	µA	Max	V_{IN} = 7.0V
I_{CEX}	Output HIGH Leakage Current				50	µA	Max	V_{OUT} = V_{CC}
V_{ID}	Input Leakage Test		4.75			V	0.0	I_{ID} = 1.9 µA All Other Pins Grounded
I_{OD}	Output Leakage Circuit Current				3.75	µA	0.0	V_{IOD} = 150 mV All Other Pins Grounded
I_{IL}	Input LOW Current				−0.6	mA	Max	V_{IN} = 0.5V
I_{OS}	Output Short-Circuit Current		−60		−150	mA	Max	V_{OUT} = 0V
I_{CCH}	Power Supply Current				17.0	mA	Max	V_O = HIGH
I_{CCL}	Power Supply Current				18.0	mA	Max	V_O = LOW

AC Electrical Characteristics

Symbol	Parameter	T_A = +25°C, V_{CC} = +5.0V, C_L = 50 pF			T_A = 0°C to +70°C, V_{CC} = +5.0V, C_L = 50 pF		Units
		Min	Typ	Max	Min	Max	
t_{PLH}	Propagation Delay	4.0		10.5	3.5	12.0	ns
t_{PHL}	A_n, B_n to $\overline{O}_n$	5.0		12.5	5.0	13.0	

Physical Dimensions inches (millimeters) unless otherwise noted

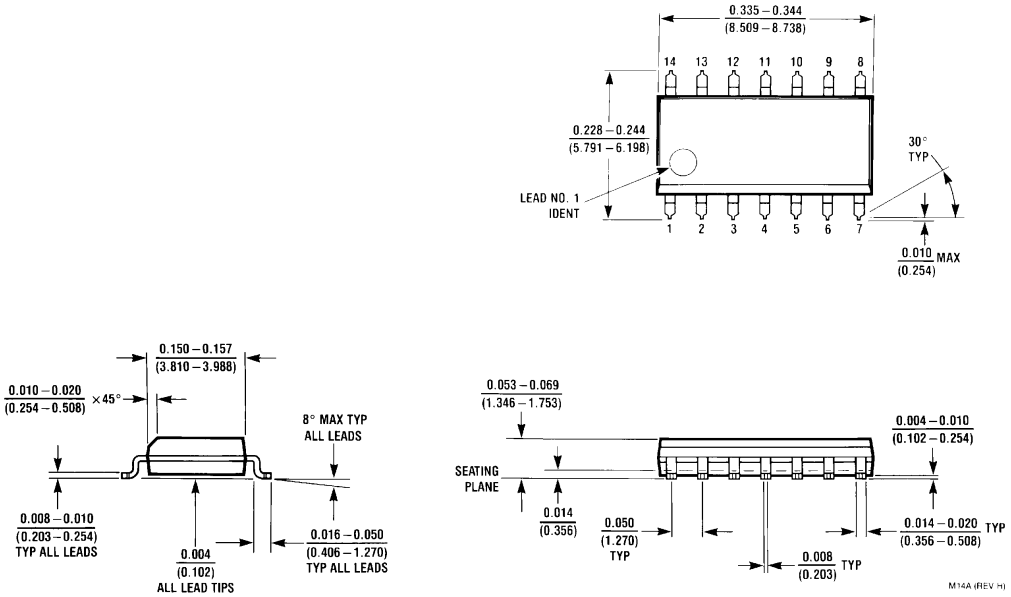

14-Lead Small Outline Integrated Circuit (SOIC), JEDEC MS-120, 0.150 Narrow
Package Number M14A

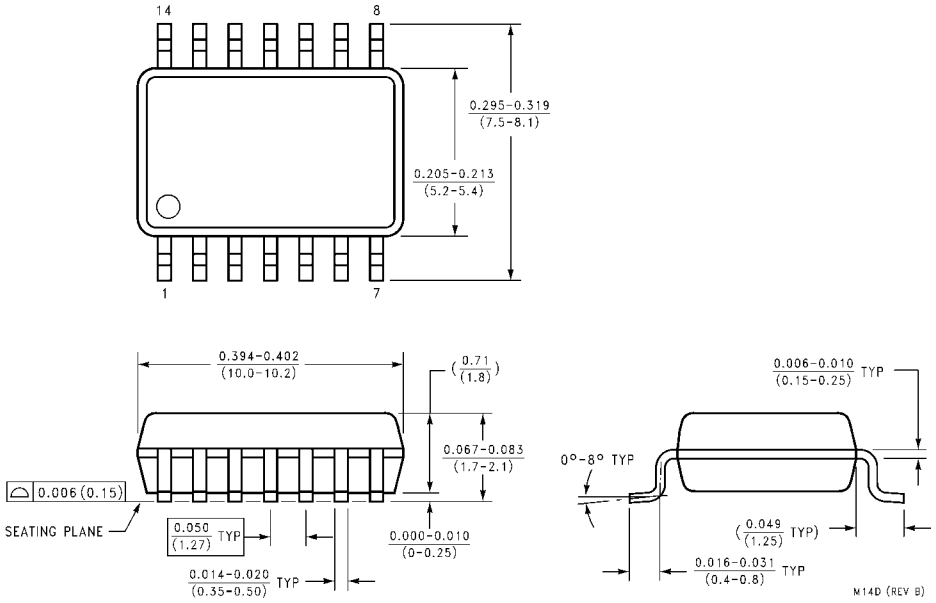

14-Lead Small Outline Package (SOP), EIAJ TYPE II, 5.3mm Wide
Package Number M14D

Physical Dimensions inches (millimeters) unless otherwise noted (Continued)

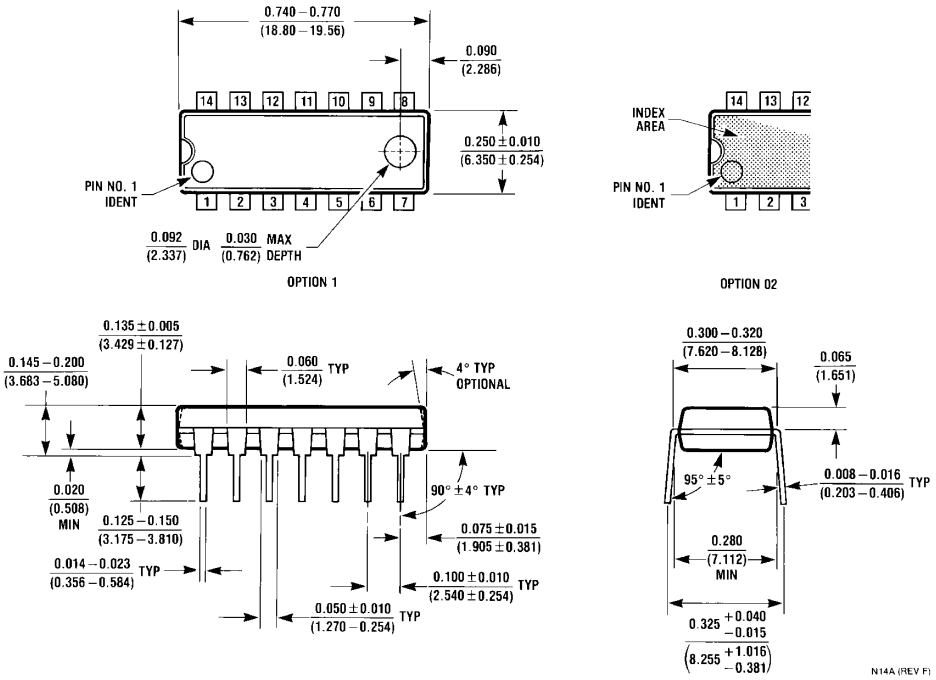

14-Lead Plastic Dual-In-Line Package (PDIP), JEDEC MS-001, 0.300 Wide
Package Number N14A

Fairchild does not assume any responsibility for use of any circuitry described, no circuit patent licenses are implied and Fairchild reserves the right at any time without notice to change said circuitry and specifications.

LIFE SUPPORT POLICY

FAIRCHILD'S PRODUCTS ARE NOT AUTHORIZED FOR USE AS CRITICAL COMPONENTS IN LIFE SUPPORT DEVICES OR SYSTEMS WITHOUT THE EXPRESS WRITTEN APPROVAL OF THE PRESIDENT OF FAIRCHILD SEMICONDUCTOR CORPORATION. As used herein:

1. Life support devices or systems are devices or systems which, (a) are intended for surgical implant into the body, or (b) support or sustain life, and (c) whose failure to perform when properly used in accordance with instructions for use provided in the labeling, can be reasonably expected to result in a significant injury to the user.
2. A critical component in any component of a life support device or system whose failure to perform can be reasonably expected to cause the failure of the life support device or system, or to affect its safety or effectiveness.

www.fairchildsemi.com