Line Driver / Receiver

Description

The SL75232N, SL75232D are monolithic device containing 3 independent drives and 5 receivers. These are designed to interface between date terminal equipment and date communication equipment as designed by EIA-232-D.

Features

- Meets standard EIA-232-D (Revision of RS-232-C)
- Drivers
- Current Limited Output 10 mA Typical
- Power-off Output Impedance 300 Ω Min
- Slew Rate Control by Load Capacitor
- Flexible Supply Voltage Range
- Input Compatible with Most TTL and DTL Circuits
- Receivers
- Input Resistance 3 kΩ to 7 kΩ
- Input Signal Range ± 30 V
- Built-in Input Hysteresis (Double Threshold)
- 20 DIP/SO20: Ì S-001AD (SL75232N) / Ì S-013AÑ (SL75232D)

Block Diagram

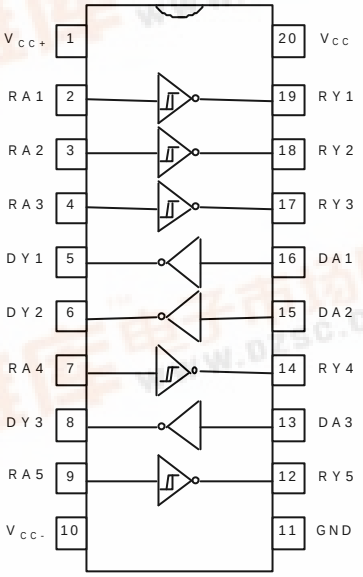

IL75232N, IL75232D

Pin Description

Name	Pin No	Function	Name	Pin No	Function
V_{CC+}	1	Driver Section Supply +	V_{CC-}	10	Driver Section Supply -
DA1	16	Driver Input	DY1	5	Driver Output
DA2	15		DY2	6	
DA3	13		DY3	8	
V_{CC}	20	Receiver Section Supply	GND	11	Ground
RA1	2	Receiver Input	RY1	19	Receiver Output
RA2	3		RY2	18	
RA3	4		RY3	17	
RA4	7		RY4	14	
RA5	9		RY5	12	

Absolute Maximum Ratings

Symbol	Parameter	Rating	Unit
V_{CC+}	Supply Voltage	15	V
V_{CC-}	Supply Voltage	-15	V
V_{CC}	Supply Voltage	10	V
VI (Driver)	Input Voltage	-15 ÷ +7	V
VI (Reciver)	Input Voltage	± 30	V
VO (Driver)	Output Voltage	-15 ÷ +15	V
PT	Continuous Power Dissipation (Below 25 ^{o}C)	1.0	W
T_{STG}	Storage Temperature	-65 ÷ +175	^{o}C
Top	Operating Temperature	0 ÷ +75	^{o}C

Schematic

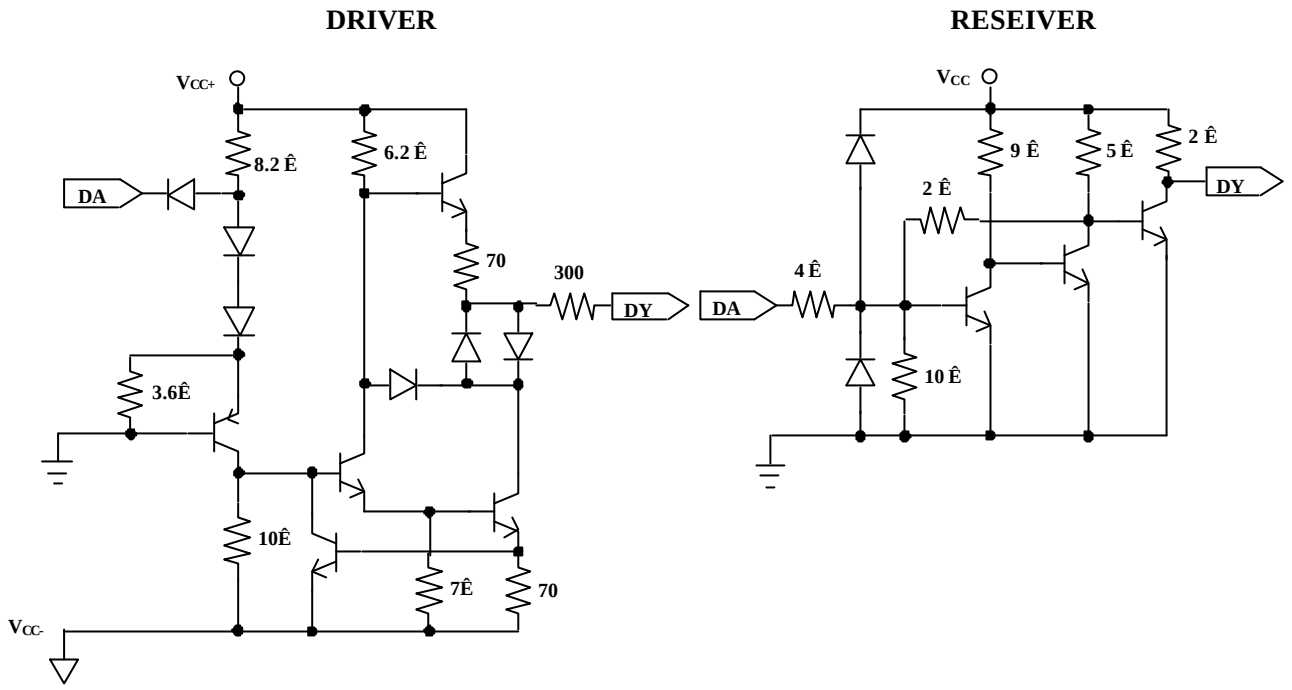

Electrical Characteristics

Supply Current

V_{CC} = 5V, T_A = 25 ^{O}C

Symbol	Parameter	Test Conditions		Min	Max	Unit
I_{CC+}	Supply Current from V_{CC+}	V_{CC+} = 9 V No Load	V_{IN} = 1.9V V_{IN} = 0.8V		15 4.5	mA
		V_{CC+} = 12 V No Load	V_{IN} = 1.9V V_{IN} = 0.8V		19 5.5	
		V_{CC+} = 15 V No Load	V_{IN} = 1.9V V_{IN} = 0.8V		25 9	
I_{CC-}	Supply Current from V_{CC-}	V_{CC-} = -9 V No Load	V_{IN} = 1.9V V_{IN} = 0.8V		-15 -3.2	mA
		V_{CC-} = -12 V No Load	V_{IN} = 1.9V V_{IN} = 0.8V		-19 -3.2	
		V_{CC-} = -15 V No Load	V_{IN} = 1.9V V_{IN} = 0.8V		-25 -3.2	
I_{CC}	Supply Current from V_{CC}	V_{CC} = 5 V	V_{IN} = 5.0V		30	mA

Driver Section

Symbol	Parameter	Test Conditions		Min	Max	Unit
V_{IH}	High Level Input Voltage	V_{CC+} = 9 V V_{CC-} = -9 V		1.9		V
V_{IL}	Low Level Input Voltage				0.8	V
V_{OH}	High Level Output Voltage	V_{IL} = 0.8V RL = 3 kΩ	V_{CC+} = 9 V V_{CC-} = -9 V	6		V
			V_{CC+} = 13.2 V V_{CC-} = -13.2 V	9		
V_{OL}	Low Level Output Voltage	V_{IH} = 1.9V RL = 3 kΩ	V_{CC+} = 9 V V_{CC-} = -9 V		-6	V
			V_{CC+} = 13.2 V V_{CC-} = -13.2 V		-9	
I_{IH}	High Level Input Current	V_I = 5V			10	µA
I_{IL}	Low Level Input Current	V_I = 0			-1.6	mA
$I_{OS(H)}$	Short Circuit Output Current at High Level	V_I = 0.8V V_O = 0		-6	-12	mA
$I_{OS(L)}$	Short Circuit Output Current at Low Level	V_I = 1.9V V_O = 0		6	12	mA
R_O	Output Resistance,	V_{CC+} = 0, V_{CC-} = 0		300		Ω

	Power Off	V_O = -2V to 2V			

Driver Switching Characteristic

V_{CC+} = 9V, V_{CC-} = -9V T_A = 25 ^{O}C

Symbol	Parameter	Test Conditions	Min	Max	Unit
t_{PLH}	Propagation Delay Time, Low-To-High-Level Output	RL = 3 kΩ CL = 15 µF		500	ns
t_{PHL}	Propagation Delay Time, High -To- Low -Level Output	See Figure 1		175	ns
t_{TLH}	Transition Time, Low-To-High-Level Output *			100	ns
t_{THL}	Transition Time, High -To- Low -Level Output*			75	ns
t_{TLH}	Transition Time, Low-To-High-Level Output**	RL = 3 kΩ to 7 kΩ CL = 2500 ρF	2.5 (tip)		µs
t_{THL}	Transition Time, High-To-Low -Level Output**	See Figure 1	3.0 (tip)		µs

*- Measured between 10 % and 90 % Points of Output Waveform

** - Measured between +3V and -3V Points on the Output Waveform (EIA-232-D Condition)

Receiver Section

Symbol	Parameter	Test Conditions	Min	Max	Unit
VT+	Positive-Going Threshold Voltage		1.75	2.25	V
VT-	Negative-Going Threshold Voltage		0.75	1.25	V
V_{OH}	High Level Output Voltage	V_I= 0.75V, I_{OL}=-0.5mA	2.6	5	V
		Input Open, I_{OL} = -0.5 mA	2.6	5	
V_{OL}	Low Level Output Voltage	V_I= 3V, I_{OL} = 10 mA		0.45	V
I_{IH}	High-Level Input Current	V_I= 25V	3.6	8.3	mA
		V_I= 3V	0.43		
I_{IL}	Low-Level Input Current	V_I= -25V	-3.6	-8.3	mA
		V_I= -3V	-0.43		
I_{OS}	Short-Circuit Output Current		-3 (tip)		mA

Receiver Switching Characteristic

V_{CC}= 5V

Symbol	Parameter	Test Conditions	Min	Max	Unit
t_{PLH}	Propagation Delay Time, Low-To-High-Level Output	C_L = 15 ρF R_L = 3.9 kΩ		190	ns
t_{PHL}	Propagation Delay Time, High -To- Low -Level Output	C_L = 15 ρF R_L = 390 kΩ		60	ns
t_{TLH}	Transition Time, Low-To-High-Level Output	C_L = 15 ρF R_L = 3.9 kΩ		175	ns

t_{THL}	Transition Time, High -To- Low -Level Output	C_L = 15 ρF R_L = 390 kΩ		20	ns

Parameter Measurement Information

DRIVER

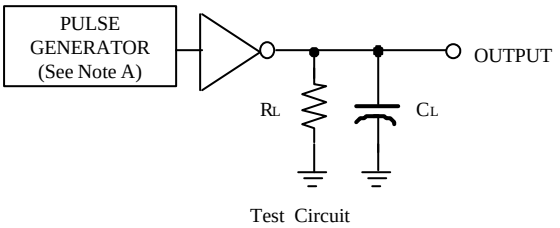

Test Circuit

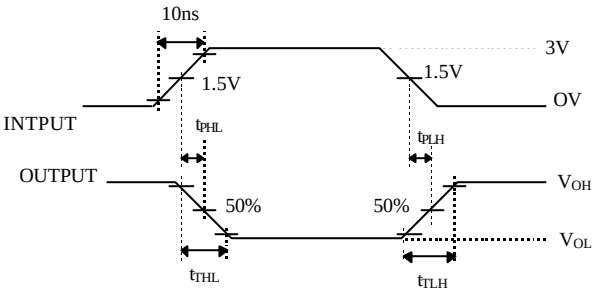

Voltage Waveform

RESEIVER

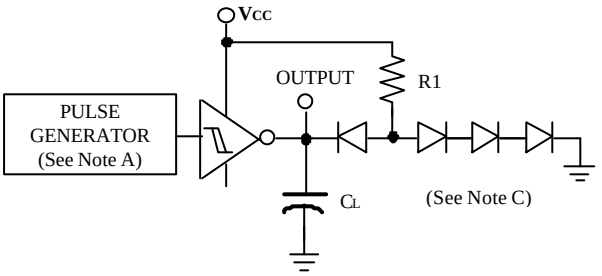

Test Circuit

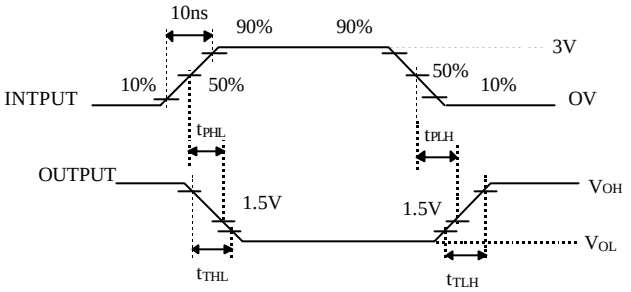

TW=25 μs, Voltage Waveform

Note A. The pulse generator has the following characteristics. f = 200 KHz, Z_O = 50 Ω
B. C included probe and jig capacitance.
C. All diodes are 1N3064 or equivalent.

Fig1. Propagation and Transition Times

Typical Application