查询82CNQ030A供应商 捷多邦，专业PCB打样工厂，24小时加急出货

Bulletin PD-20041 rev. B 09/01

International
IOR Rectifier

82CNQ030A

SCHOTTKY RECTIFIER
New GenIII D-61 Package

80 Amp

Major Ratings and Characteristics

Characteristics		82CNQ030A	Units
$I_{F(AV)}$	Rectangular waveform	80	A
V_{RRM}		30	V
I_{FSM}	@tp = 5 µs sine	5100	A
V_F	@40Apk, T_J=125°C (per leg)	0.37	V
T_J	range	-55 to 150	°C

Description/Features

The 82CNQ030A center tap Schottky rectifier module has been optimized for very low forward voltage drop, with moderate leakage. The proprietary barrier technology allows for reliable operation up to 150 °C junction temperature. Typical applications are in switching power supplies, converters, free-wheeling diodes, and reverse battery protection.

- 150 °C T_J operation
- Dual center tap module
- Very low forward voltage drop
- High purity, high temperature epoxy encapsulation for enhanced mechanical strength and moisture resistance
- High frequency operation
- Guard ring for enhanced ruggedness and long term reliability
- *New fully transfer-mold low profile, small footprint, high current package*

Case Styles

82CNQ...A

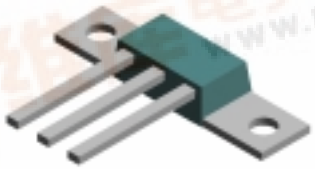

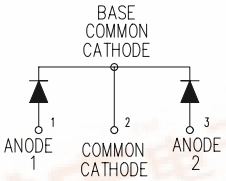

D61-8

82CNQ...ASM

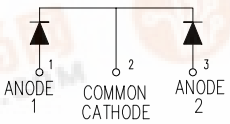

D61-8-SM

82CNQ...ASL

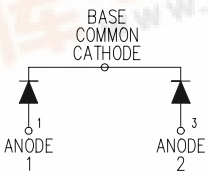

D61-8-SL

找PDF 维库一下 pdf.dzsc.com

Voltage Ratings

	Part number	82CNQ030A
V_R	Max. DC Reverse Voltage (V)	30
V_{RWM}	Max. Working Peak Reverse Voltage (V)	

Absolute Maximum Ratings

	Parameters	82CNQ	Units	Conditions	
$I_{F(AV)}$	Max. Average Forward Current * See Fig. 5	80	A	50% duty cycle @ T_C = 119 °C, rectangular waveform	
I_{FSM}	Max. Peak One Cycle Non-Repetitive Surge Current (Per Leg) * See Fig. 7	5100	A	5µs Sine or 3µs Rect. pulse	Following any rated load condition and with rated V_{RRM} applied
		880		10ms Sine or 6ms Rect. pulse	
E_{AS}	Non-Repetitive Avalanche Energy (Per Leg)	36	mJ	T_J = 25 °C, I_{AS} = 8 Amps, L = 1.12 mH	
I_{AR}	Repetitive Avalanche Current (Per Leg)	8	A	Current decaying linearly to zero in 1 µsec Frequency limited by T_J max. V_A = 1.5 x V_R typical	

Electrical Specifications

	Parameters	82CNQ	Units	Conditions	
V_{FM}	Max. Forward Voltage Drop (Per Leg) * See Fig. 1 (1)	0.47	V	@ 40A	T_J = 25 °C
		0.55	V	@ 80A	
		0.37	V	@ 40A	T_J = 125 °C
		0.47	V	@ 80A	
I_{RM}	Max. Reverse Leakage Current (Per Leg) * See Fig. 2 (1)	5	mA	T_J = 25 °C	V_R = rated V_R
		280	mA	T_J = 125 °C	
C_T	Max. Junction Capacitance (Per Leg)	3700	pF	V_R = 5V_{DC}, (test signal range 100Khz to 1Mhz) 25°C	
L_S	Typical Series Inductance (Per Leg)	5.5	nH	Measured lead to lead 5mm from package body	
dv/dt	Max. Voltage Rate of Change (Rated V_R)	10,000	V/ µs		

(1) Pulse Width < 300µs, Duty Cycle <2%

Thermal-Mechanical Specifications

	Parameters		82CNQ	Units	Conditions
T_J	Max. Junction Temperature Range		-55 to 150	°C	
T_{stg}	Max. Storage Temperature Range		-55 to 150	°C	
R_{thJC}	Max. Thermal Resistance Junction to Case (Per Leg)		0.85	°C/W	DC operation * See Fig. 4
R_{thJC}	Max. Thermal Resistance Junction to Case (Per Package)		0.42	°C/W	DC operation
R_{thCS}	Typical Thermal Resistance, Case to Heatsink **(D61-8 Only)**		0.30	°C/W	Mounting surface, smooth and greased Device flatness < 5 mils
wt	Approximate Weight		7.8 (0.28)	g (oz.)	
T	Mounting Torque	Min.	40 (35)	Kg-cm (lbf-in)	
	(D61-8 Only)	Max.	58 (50)		

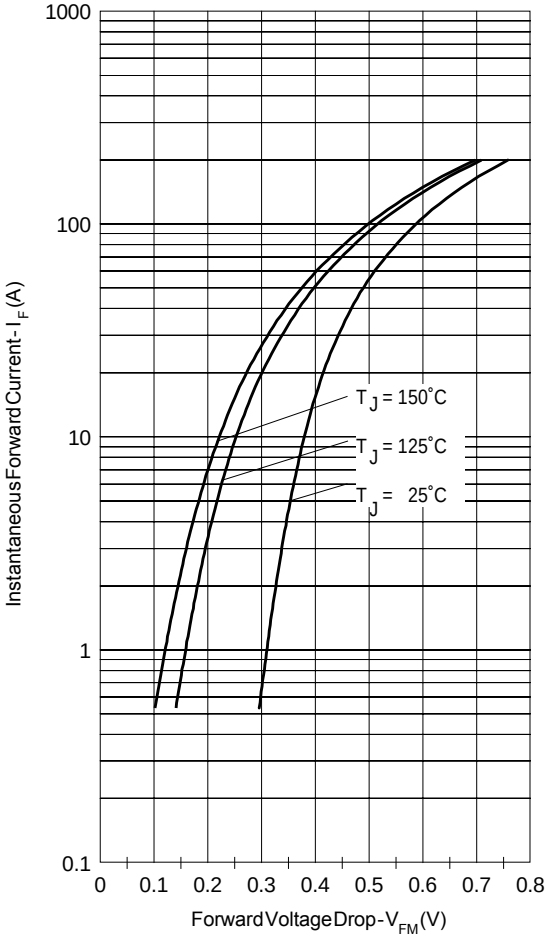

Fig. 1 - Max. Forward Voltage Drop Characteristics (Per Leg)

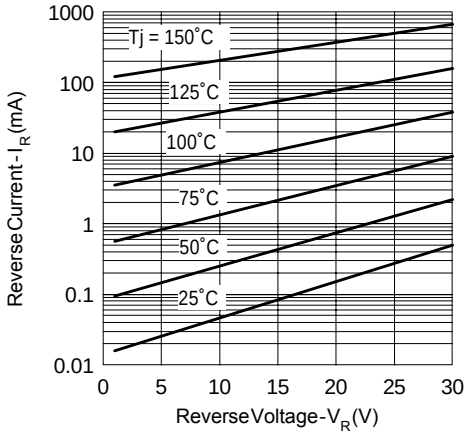

Fig. 2 - Typical Values Of Reverse Current Vs. Reverse Voltage (Per Leg)

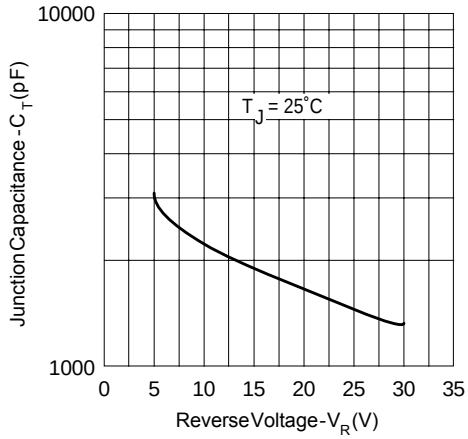

Fig. 3 - Typical Junction Capacitance Vs. Reverse Voltage (Per Leg)

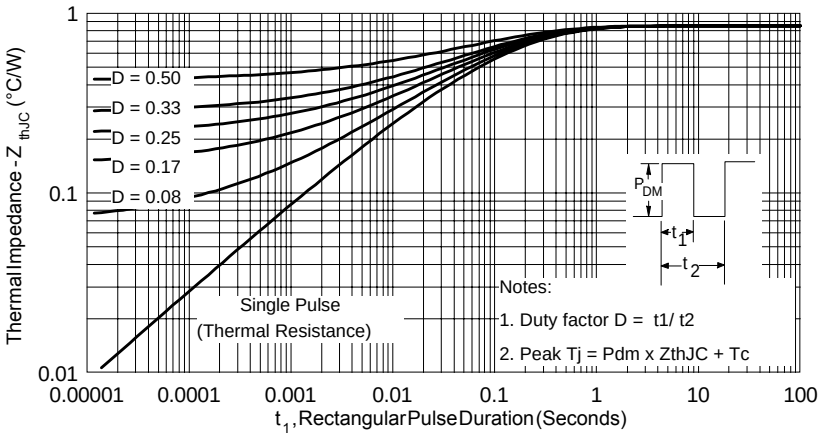

Fig. 4 - Max. Thermal Impedance Z_{thJC} Characteristics (Per Leg)

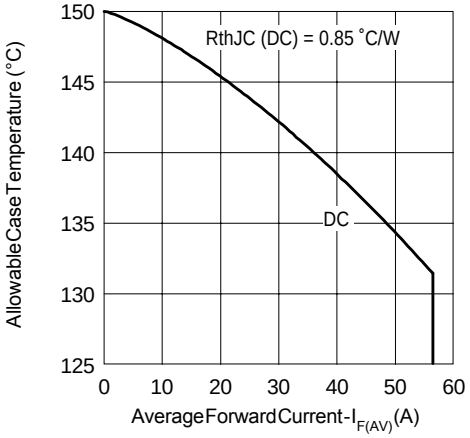

Fig. 5 - Max. Allowable Case Temperature Vs. Average Forward Current (Per Leg)

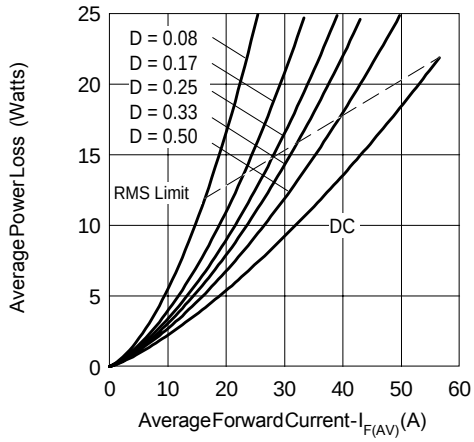

Fig. 6 - Forward Power Loss Characteristics (Per Leg)

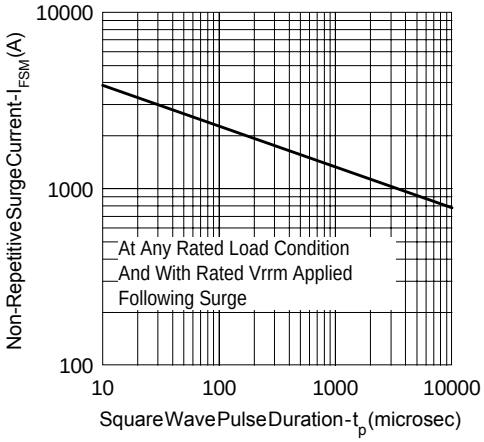

Fig. 7 - Max. Non-Repetitive Surge Current (Per Leg)

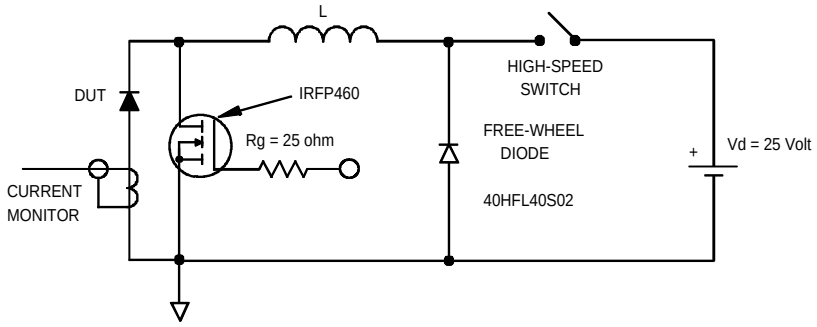

Fig. 8 - Unclamped Inductive Test Circuit

Outline Table

Outline D61-8

Dimensions are in millimeters and (inches)

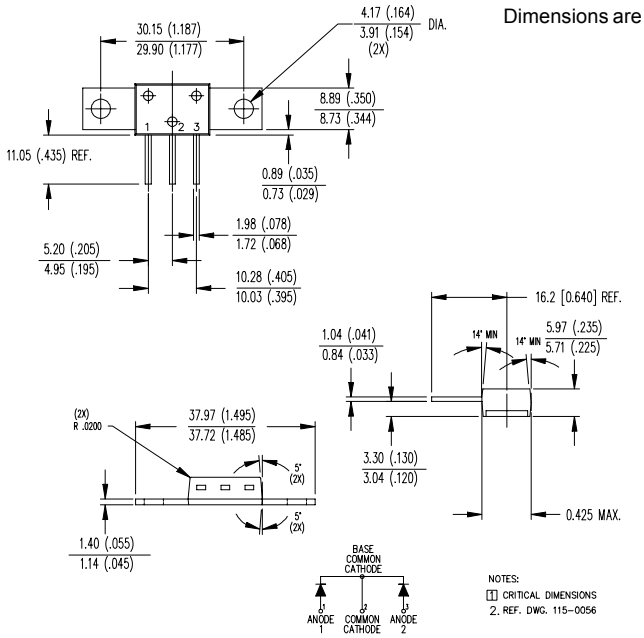

Outline D61-8-SM

Dimensions are in millimeters and (inches)

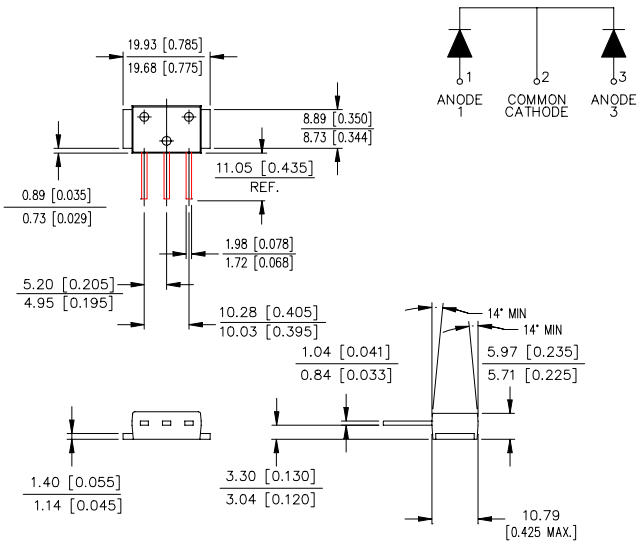

Outline Table

Outline D61-8-SL
Dimensions are in millimeters and (inches)

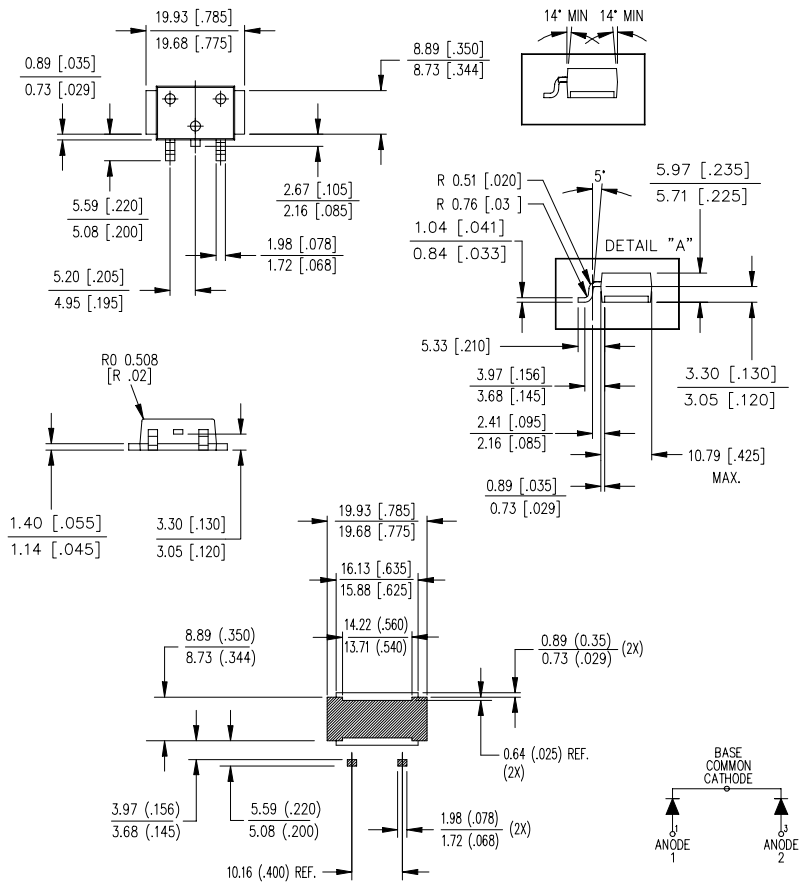

Part Marking Information

EXAMPLE: THIS IS A 82CNQ030A WITH
LOT CODE 89 09
ASSEMBLED ON WW 45, 2000
IN THE ASSEMBLY LINE "A"

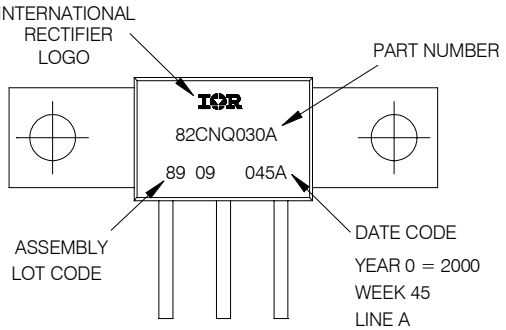

D61-8

EXAMPLE: THIS IS A 82CNQ030ASM WITH
LOT CODE 89 09
ASSEMBLED ON WW 45, 2000
IN THE ASSEMBLY LINE "A"

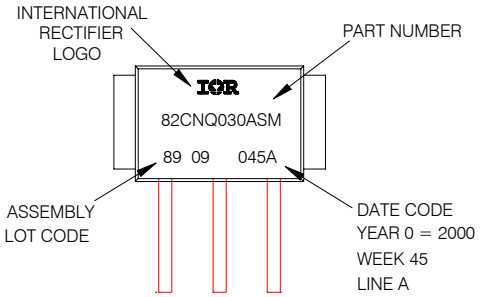

D61-8-SM

EXAMPLE: THIS IS A 82CNQ030ASL WITH
LOT CODE 89 09
ASSEMBLED ON WW 45, 2000
IN THE ASSEMBLY LINE "A"

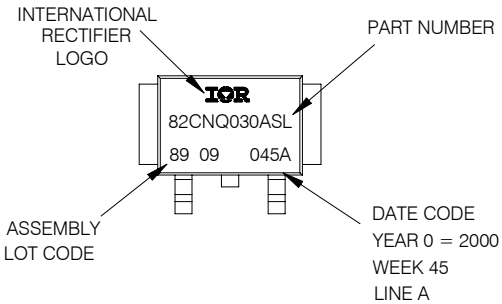

D61-8-SL

Data and specifications subject to change without notice.
This product has been designed and qualified for Industrial Level.
Qualification Standards can be found on IR's Web site.

International IOR Rectifier

IR WORLD HEADQUARTERS: 233 Kansas St., El Segundo, California 90245, USA Tel: (310) 252-7105
TAC Fax: (310) 252-7309
Visit us at www.irf.com for sales contact information. 09/01