查询SSP4N60AS供应商 捷多邦，专业PCB打样工厂，24小时加急出货

Advanced Power MOSFET SSP4N60AS

FEATURES

- Avalanche Rugged Technology
- Rugged Gate Oxide Technology
- Lower Input Capacitance
- Improved Gate Charge
- Extended Safe Operating Area
- Lower Leakage Current : 25 μA (Max.) @ V_{DS} = 600V
- Lower $R_{DS(ON)}$: 2.037 Ω (Typ.)

BV_{DSS} = 600 V
$R_{DS(on)}$ = 2.5 Ω
I_D = 4 A

TO-220

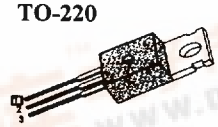

1.Gate 2. Drain 3. Source

Absolute Maximum Ratings

Symbol	Characteristic	Value	Units
V_{DSS}	Drain-to-Source Voltage	600	V
I_D	Continuous Drain Current (T_C=25°C)	4	A
	Continuous Drain Current (T_C=100°C)	2.5	
I_{DM}	Drain Current-Pulsed ①	16	A
V_{GS}	Gate-to-Source Voltage	±30	V
E_{AS}	Single Pulsed Avalanche Energy ②	262	mJ
I_{AR}	Avalanche Current ①	4	A
E_{AR}	Repetitive Avalanche Energy ①	10	mJ
dv/dt	Peak Diode Recovery dv/dt ③	3.0	V/ns
P_D	Total Power Dissipation (T_C=25 °C) Linear Derating Factor	100 0.8	W • •°C
T_J , T_{STG}	Operating Junction and Storage Temperature Range	- 55 to +150	°C
T_L	Maximum Lead Temp. for Soldering Purposes, 1/8 " from case for 5-seconds	300	

Thermal Resistance

Symbol	Characteristic	Typ.	Max.	Units
$R_{\theta JC}$	Junction-to-Case	--	1.25	°C/W
$R_{\theta CS}$	Case-to-Sink	0.5	--	
$R_{\theta JA}$	Junction-to-Ambient	--	62.5	

SAMSUNG ELECTRONICS

找PDF 维库一下 pdf.dzsc.com

Electrical Characteristics (T_C=25°C unless otherwise specified)

Symbol	Characteristic	Min.	Typ.	Max.	Units	Test Condition
BV_{DSS}	Drain-Source Breakdown Voltage	600	--	--	V	V_{GS}=0V, I_D=250μA
$\Delta BV/\Delta T_J$	Breakdown Voltage Temp. Coeff.	--	0.68	--	V/°C	I_D=250μA *See Fig 7*
$V_{GS(th)}$	Gate Threshold Voltage	2.0	--	4.0	V	V_{DS}=5V, I_D=250 μA
I_{GSS}	Gate-Source Leakage , Forward	--	--	100	nA	V_{GS}=30V
	Gate-Source Leakage , Reverse	--	--	-100		V_{GS}=-30V
I_{DSS}	Drain-to-Source Leakage Current	--	--	25	μA	V_{DS}=600V
		--	--	250		V_{DS}=480V, T_C=125 °C
$R_{DS(on)}$	Static Drain-Source On-State Resistance	--	--	2.5	Ω	V_{GS}=10V, I_D=2A ④
g_{fs}	Forward Transconductance	--	3.32	--	℧	V_{DS}=50V, I_D=2A ④
C_{iss}	Input Capacitance	--	545	710	pF	V_{GS}=0V, V_{DS}=25V, f =1MHz *See Fig 5*
C_{oss}	Output Capacitance	--	63	75		
C_{rss}	Reverse Transfer Capacitance	--	25	30		
$t_{d(on)}$	Turn-On Delay Time	--	14	40	ns	V_{DD}=300V, I_D=4A, R_G=12 Ω *See Fig 13* ④ ⑤
t_r	Rise Time	--	16	45		
$t_{d(off)}$	Turn-Off Delay Time	--	49	110		
t_f	Fall Time	--	22	55		
Q_g	Total Gate Charge	--	25	34	nC	V_{DS}=480V, V_{GS}=10V, I_D=4A *See Fig 6 & Fig 12* ④ ⑤
Q_{gs}	Gate-Source Charge	--	4	--		
Q_{gd}	Gate-Drain("Miller") Charge	--	11.9	--		

Source-Drain Diode Ratings and Characteristics

Symbol	Characteristic	Min.	Typ.	Max.	Units	Test Condition
I_S	Continuous Source Current	--	--	4	A	Integral reverse pn-diode in the MOSFET
I_{SM}	Pulsed-Source Current ①	--	--	16		
V_{SD}	Diode Forward Voltage ④	--	--	1.4	V	T_J=25°C, I_S=4A, V_{GS}=0V
t_{rr}	Reverse Recovery Time	--	350	--	ns	T_J=25°C, I_F=4A
Q_{rr}	Reverse Recovery Charge	--	2.15	--	μC	di_F/dt=100A/μs ④

Notes ;

① Repetitive Rating : Pulse Width Limited by Maximum Junction Temperature
② L=30mH, I_{AS}=4A, V_{DD}=50V, R_G=27Ω, Starting T_J=25 °C
③ I_{SD}≤ 4A, di/dt ≤ 100A/μs, V_{DD}≤BV_{DSS} , Starting T_J=25 °C
④ Pulse Test : Pulse Width = 250μs, Duty Cycle ≤ 2%
⑤ Essentially Independent of Operating Temperature

Fig 1. Output Characteristics

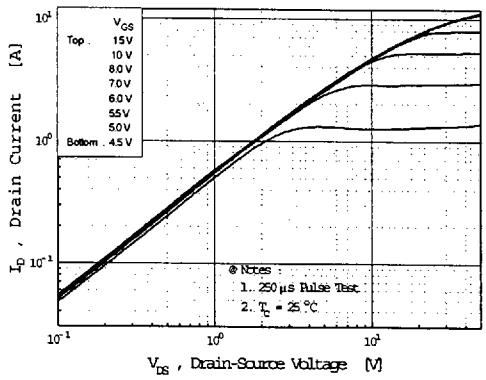

Fig 2. Transfer Characteristics

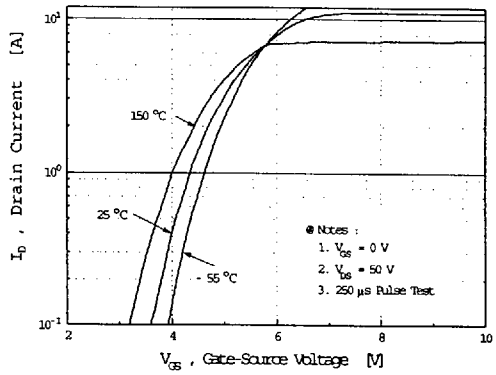

Fig 3. On-Resistance vs. Drain Current

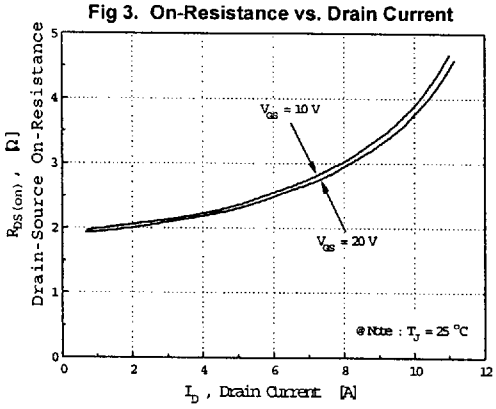

Fig 4. Source-Drain Diode Forward Voltage

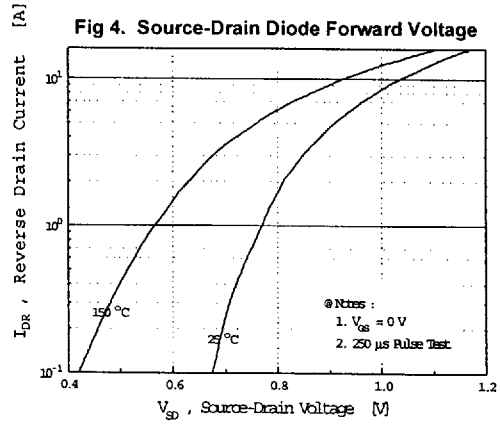

Fig 5. Capacitance vs. Drain-Source Voltage

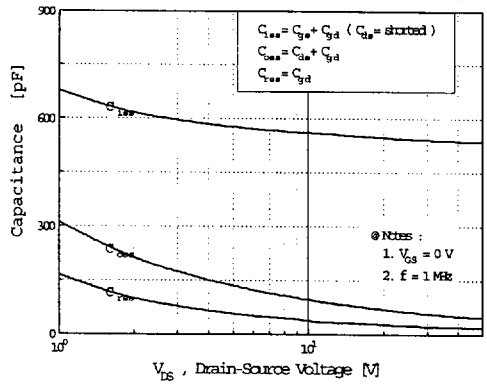

Fig 6. Gate Charge vs. Gate-Source Voltage

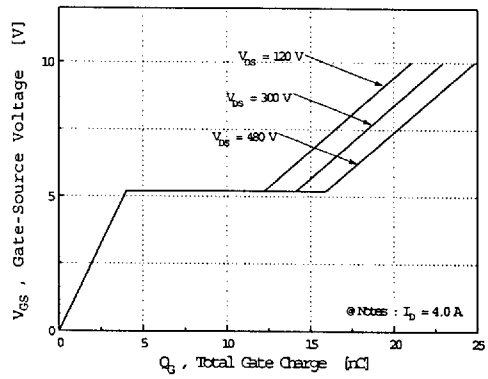

Fig 7. Breakdown Voltage vs. Temperature

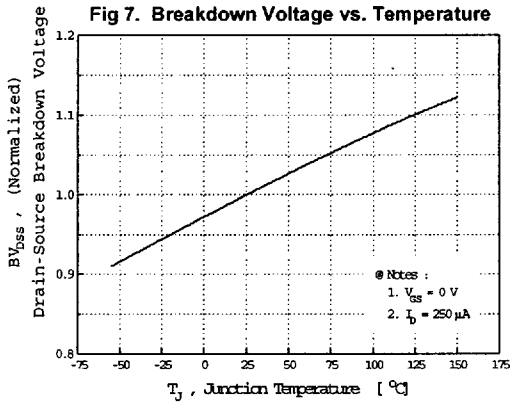

Fig 8. On-Resistance vs. Temperature

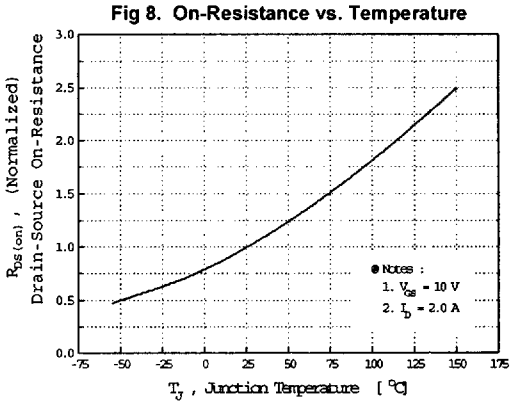

Fig 9. Max. Safe Operating Area

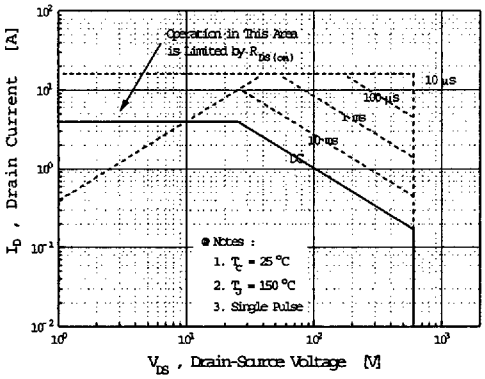

Fig 10. Max. Drain Current vs. Case Temperature

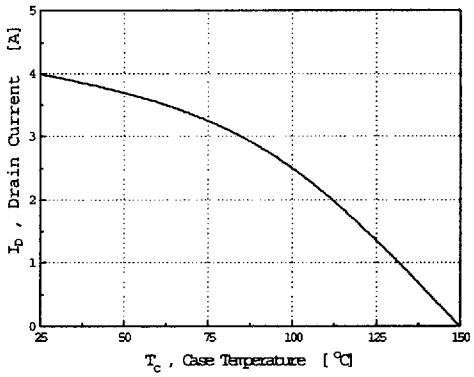

Fig 11. Thermal Response

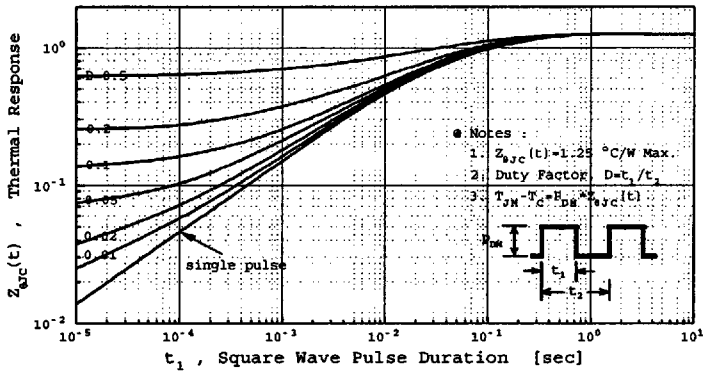

Fig 12. Gate Charge Test Circuit & Waveform

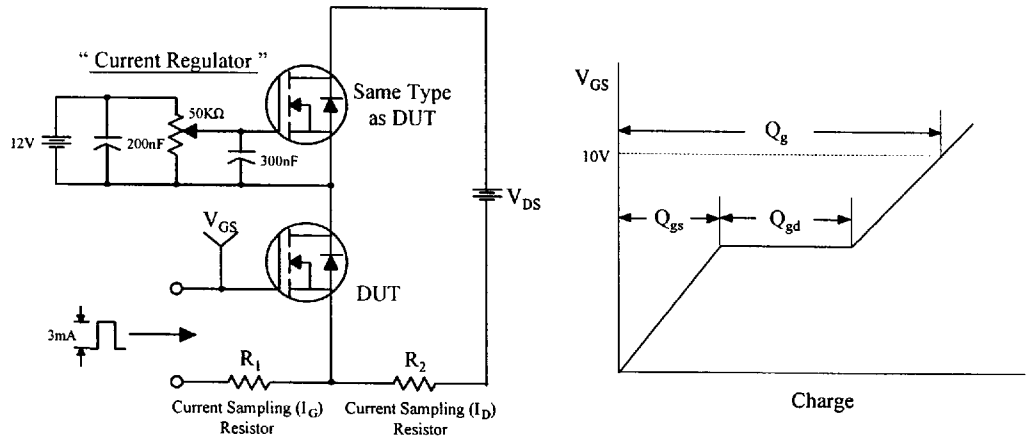

Fig 13. Resistive Switching Test Circuit & Waveforms

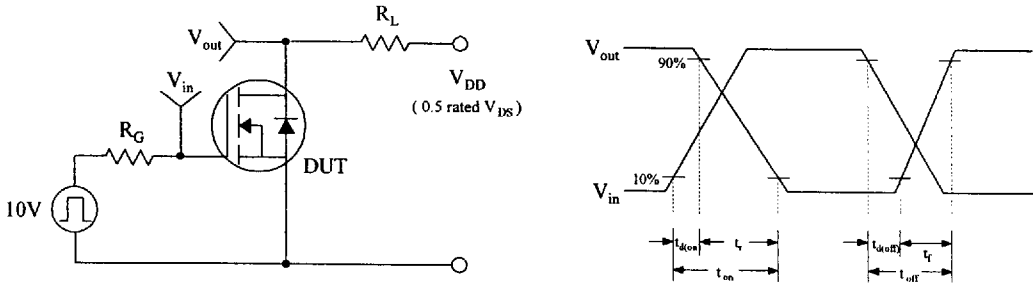

Fig 14. Unclamped Inductive Switching Test Circuit & Waveforms

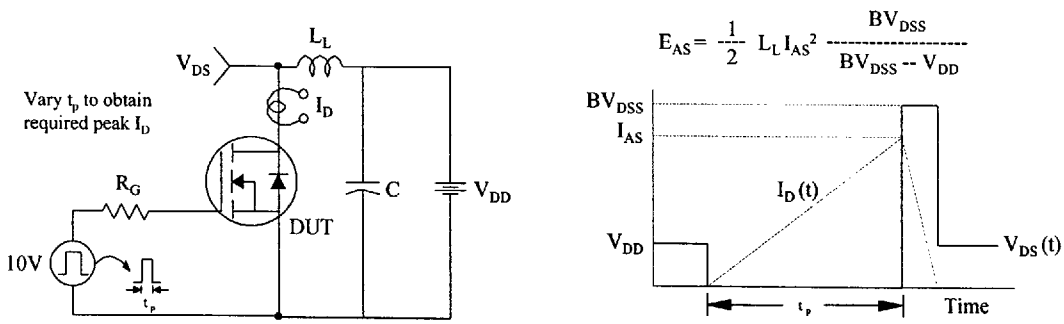

Fig 15. Peak Diode Recovery dv/dt Test Circuit & Waveforms

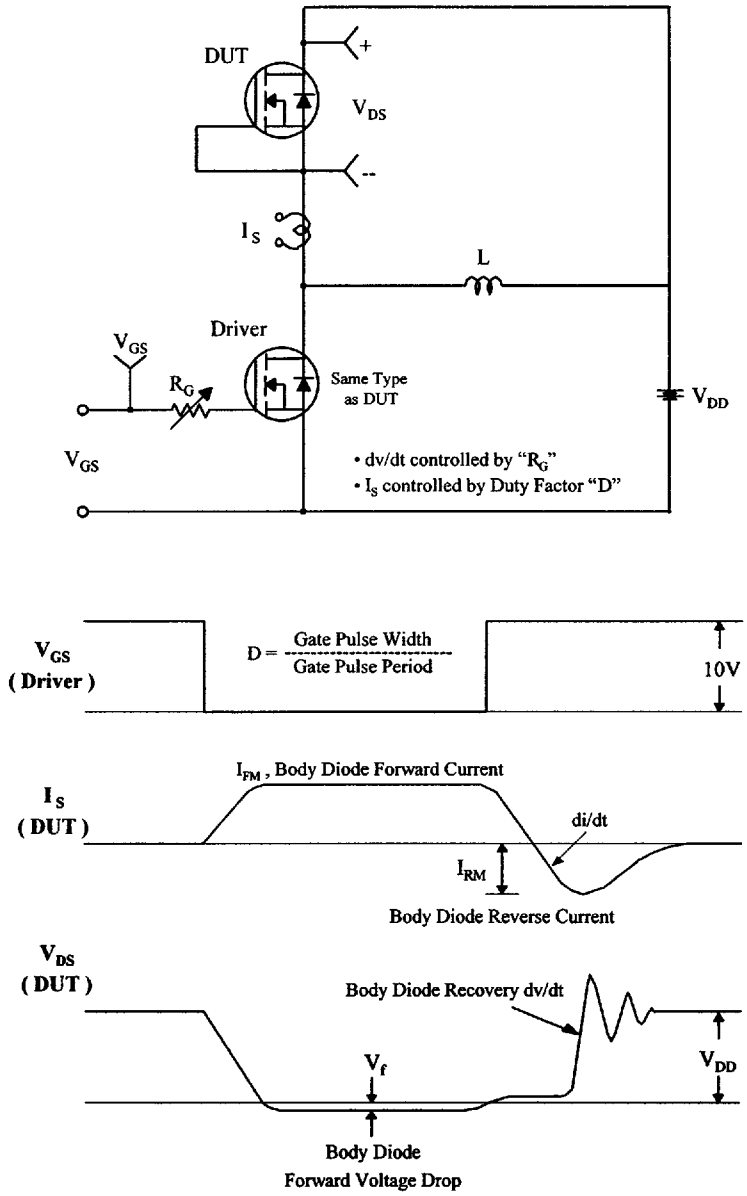

Dimensions in Milimeters

TO-220 (1)

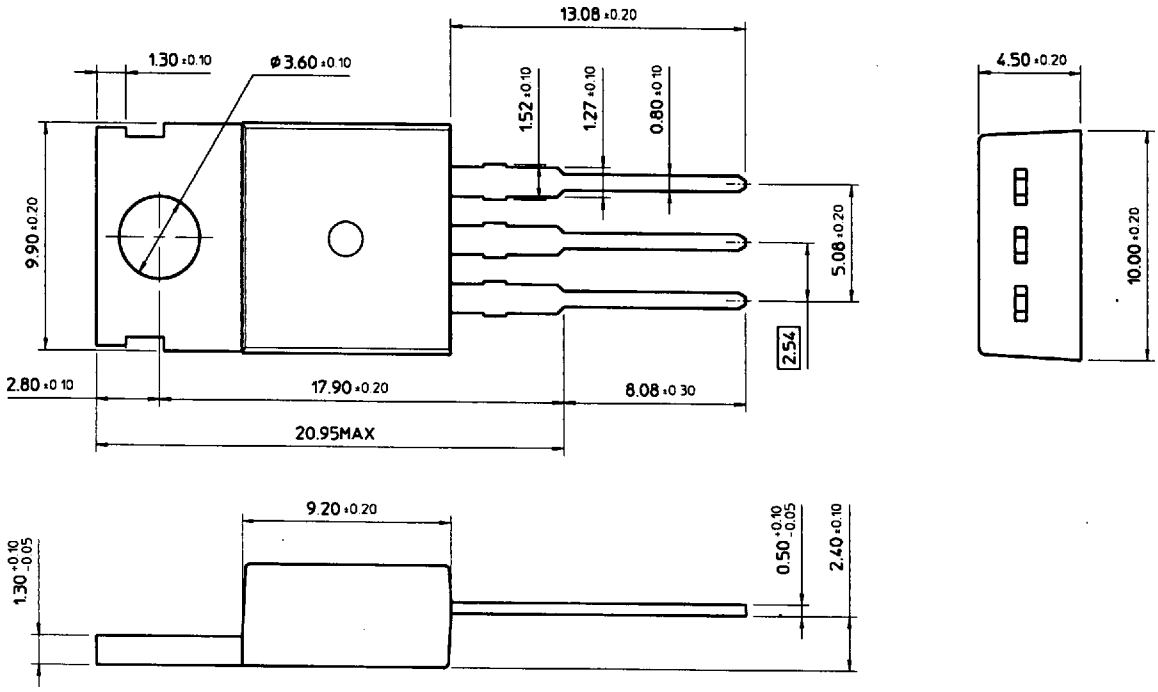

TO-220 (2)

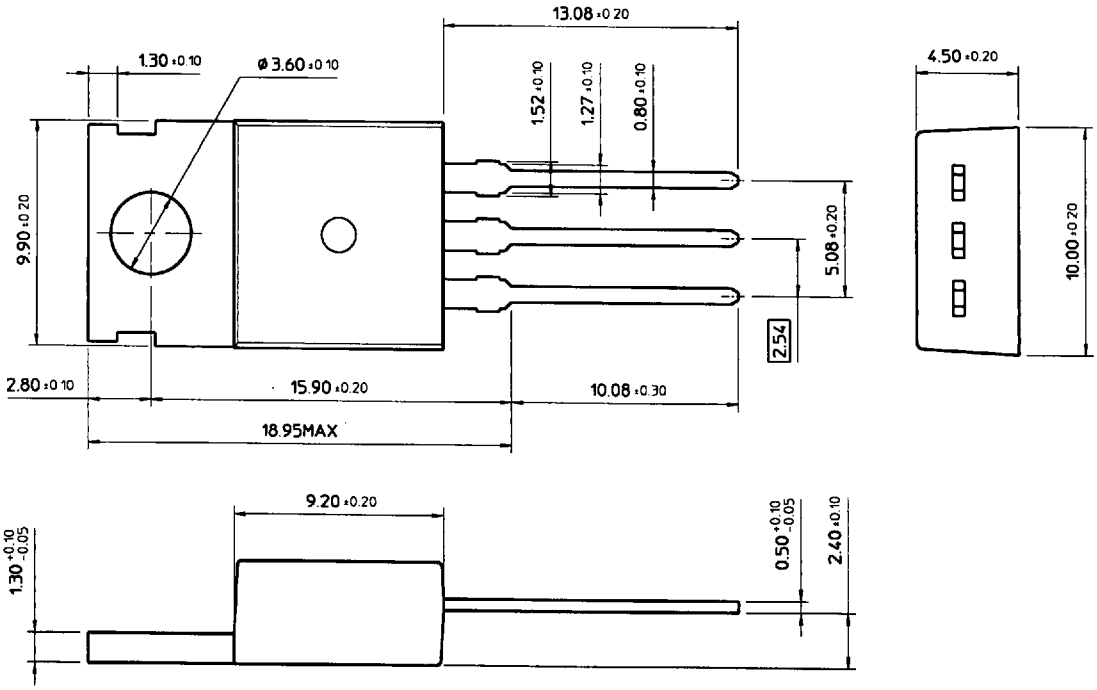

7964142 0036328 063

Dimensions in Milimeters

TO-220 (3)

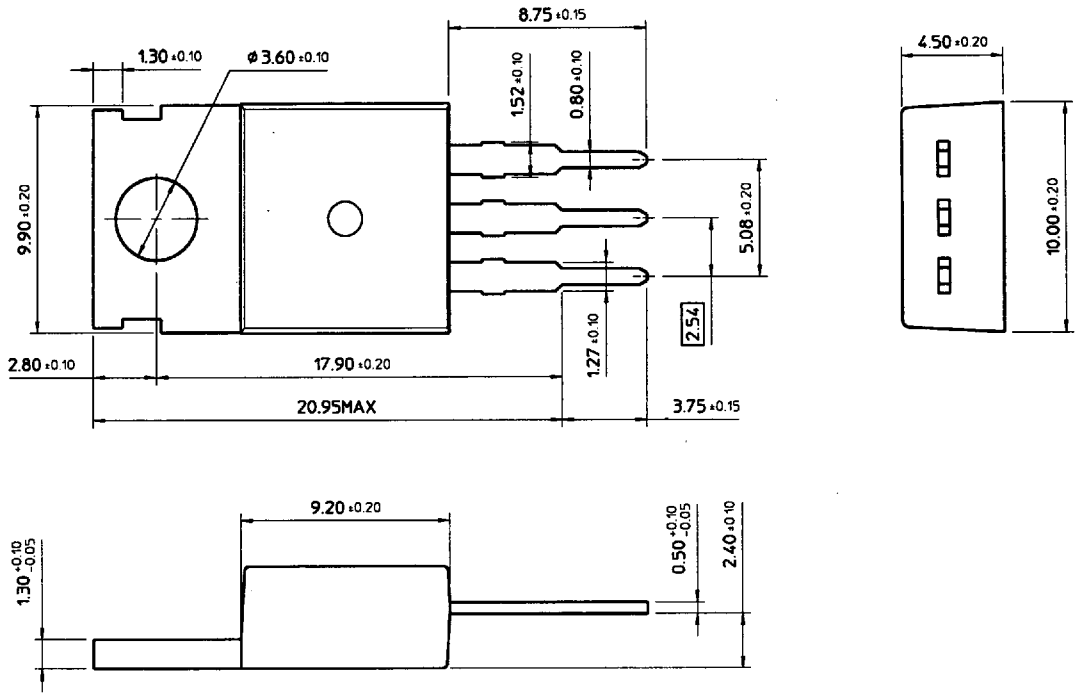

TO-220 (4)

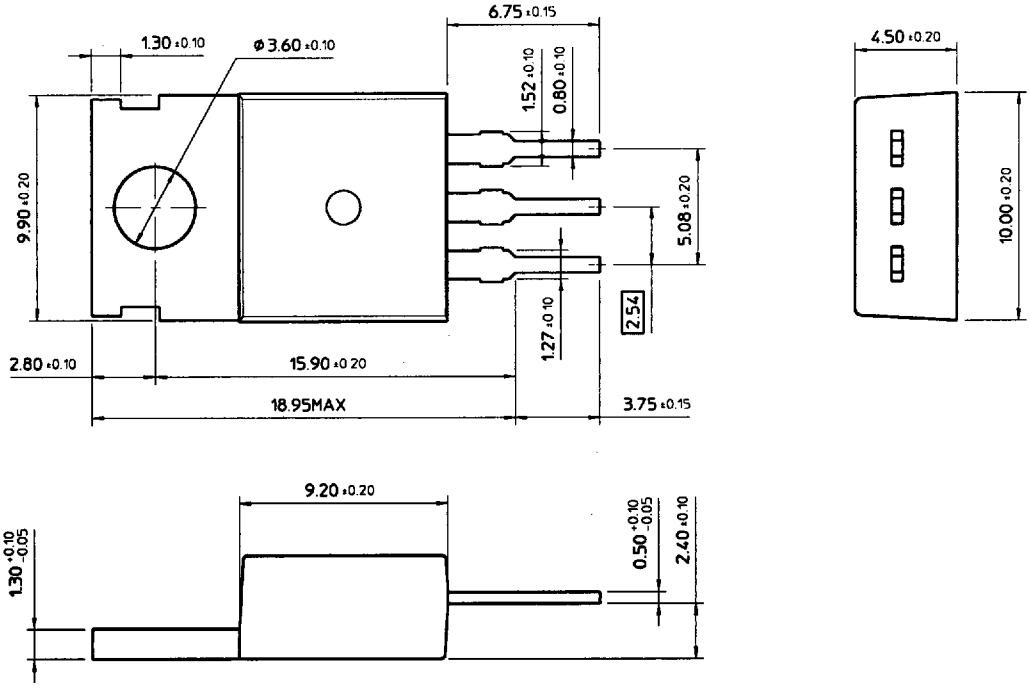

2964142 0036329 TTT

Dimensions in Milimeters

TO-220 (5)

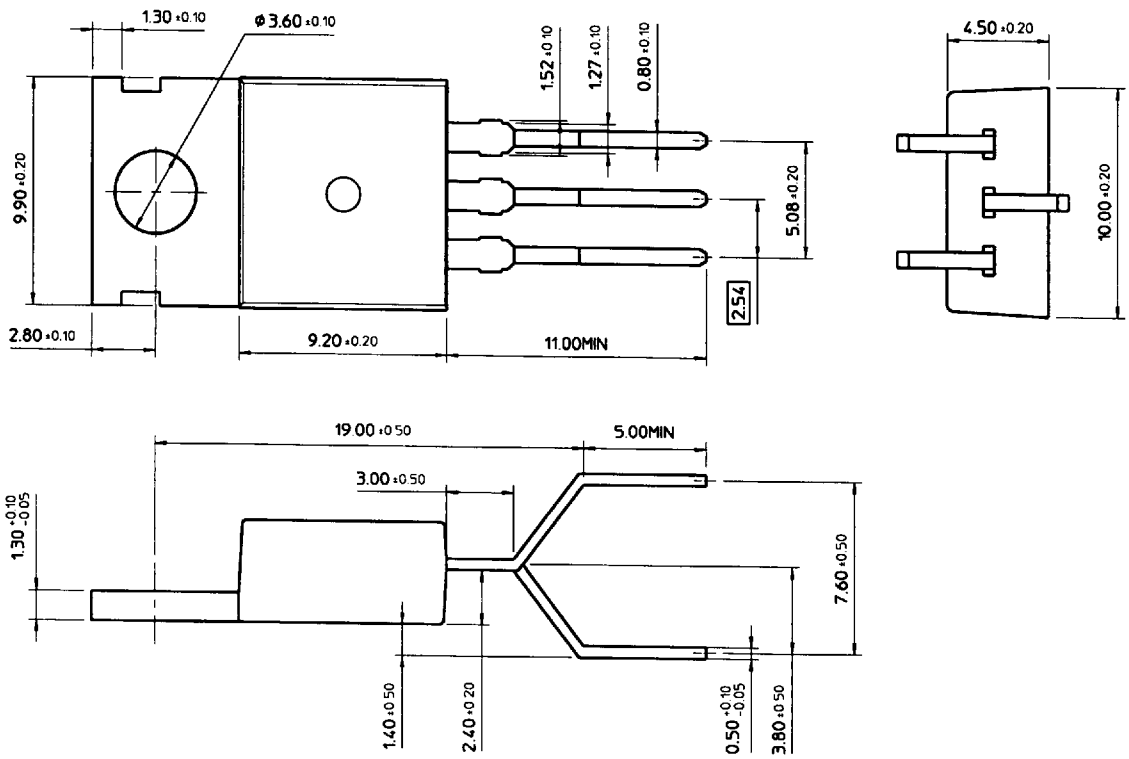

NOTE