HIGH-VOLTAGE HIGH-CURRENT DARLINGTON TRANSISTOR ARRAYS

- 500-mA Rated Collector Current (Single Output)
- High-Voltage Outputs . . . 100 V
- Output Clamp Diodes
- Inputs Compatible With Various Types of Logic
- Relay Driver Applications
- Higher-Voltage Versions of ULN2001A, ULN2002A, ULN2003A, and ULN2004A, Respectively, for Commercial Temperature Range

D OR N PACKAGE
(TOP VIEW)

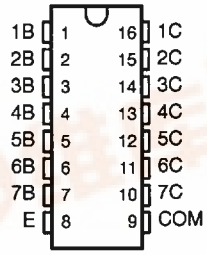

description

The SN75466, SN75467, SN75468, and SN75469 are monolithic high-voltage, high-current Darlington transistor arrays. Each consists of seven npn Darlington pairs that feature high-voltage outputs with common-cathode clamp diodes for switching inductive loads. The collector-current rating of each Darlington pair is 500 mA. The Darlington pairs may be paralleled for higher current capability. Applications include relay drivers, hammer drivers, lamp drivers, display drivers (LED and gas discharge), line drivers, and logic buffers.

The SN75466 is a general-purpose array and can be used with TTL, P-MOS, CMOS, and other MOS technologies. The SN75467 is specifically designed for use with 14- to 25-V P-MOS devices, and each input has a zener diode and resistor in series to limit the input current to a safe limit. The SN75468 has a 2700-Ω series base resistor for each Darlington pair for operation directly with TTL or 5-V CMOS. The SN75469 has a 10.5-kΩ series base resistor to allow its operation directly from CMOS or P-MOS that use supply voltages of 6 to 15 V. The required input current is below that of the SN75468 and the required voltage is less than that required by the SN75467.

logic symbol†

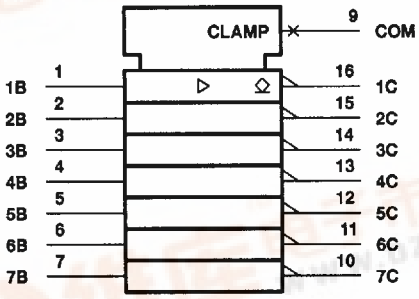

† This symbol is in accordance with ANSI/IEEE Std 91-1984 and IEC publication 617-12.

logic diagram

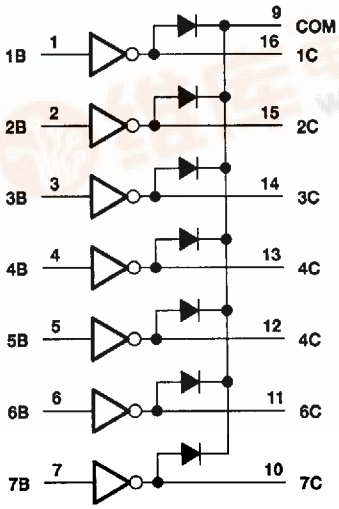

schematics (each Darlington pair)

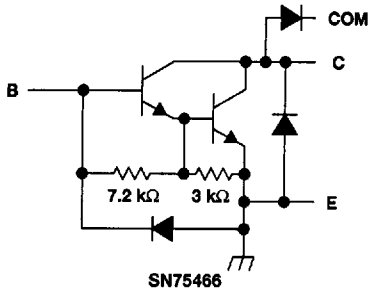

SN75466

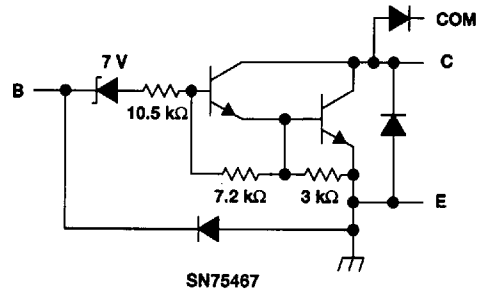

SN75467

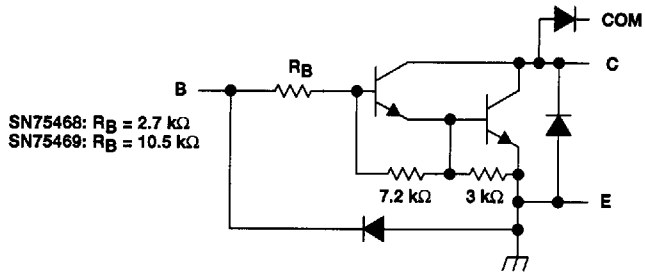

SN75468, SN75469

All resistor values shown are nominal.

absolute maximum ratings at 25°C free-air temperature (unless otherwise noted)

Collector-emitter voltage	100 V
Input voltage (see Note 1)	30 V
Peak collector current (see Figures 14 and 15)	500 mA
Output clamp current, I_{OK}	500 mA
Total emitter-terminal current	−2.5 A
Continuous total power dissipation	See Dissipation Rating Table
Operating free-air temperature range, T_A	0°C to 70°C
Storage temperature range	−65°C to 150°C
Lead temperature 1,6 mm (1/16 inch) from case for 10 seconds	260°C

NOTE 1: All voltage values are with respect to the emitter/substrate terminal E, unless otherwise noted.

DISSIPATION RATING TABLE

PACKAGE	$T_A \leq 25°C$ POWER RATING	DERATING FACTOR ABOVE $T_A = 25°C$	$T_A = 70°C$ POWER RATING
D	950 mW	7.6 mW/°C	608 mW
N	1150 mW	9.2 mW/°C	736 mW

electrical characteristics, T_A = 25°C (unless otherwise noted)

PARAMETER		TEST FIGURE	TEST CONDITIONS		SN75466 MIN	SN75466 TYP	SN75466 MAX	SN75467 MIN	SN75467 TYP	SN75467 MAX	UNIT
$V_{I(on)}$	On-state input voltage	5	V_{CE} = 2 V,	I_C = 300 mA						13	V
$V_{CE(sat)}$	Collector-emitter saturation voltage	6	I_I = 250 µA,	I_C = 100 mA		0.9	1.1		0.9	1.1	V
			I_I = 350 µA,	I_C = 200 mA		1	1.3		1	1.3	
			I_I = 500 µA,	I_C = 350 mA		1.2	1.6		1.2	1.6	
V_F	Clamp-diode forward voltage	8	I_F = 350 mA			1.7	2		1.7	2	V
I_{CEX}	Collector cutoff current	1	V_{CE} = 100 V,	I_I = 0			50			50	µA
			V_{CE} = 100 V, T_A = 70°C	I_I = 0			100			100	
		2		V_I = 6 V						500	
$I_{I(off)}$	Off-state input current	3	V_{CE} = 50 V, T_A = 70°C	I_C = 500 µA,	50	65		50	65		µA
I_I	Input current	4	V_I = 17 V						0.82	1.25	mA
h_{FE}	Static forward current transfer ratio	6	V_{CE} = 2 V,	I_C = 350 mA	1000						
I_R	Clamp-diode forward voltage	7	V_R = 100 V				50			50	µA
			V_R = 100 V,	T_A = 70°C			100			100	
C_i	Input capacitance		V_I = 0,	f = 1 MHz		15	25		15	25	pF

electrical characteristics, T_A = 25°C (unless otherwise noted)

PARAMETER		TEST FIGURE	TEST CONDITIONS		SN75468 MIN	SN75468 TYP	SN75468 MAX	SN75469 MIN	SN75469 TYP	SN75469 MAX	UNIT
$V_{I(on)}$	On-state input voltage	5	V_{CE} = 2 V,	I_C = 125 mA						5	V
				I_C = 200 mA			2.4			6	
				I_C = 250 mA			2.7				
				I_C = 275 mA						7	
				I_C = 300 mA			3				
				I_C = 350 mA						8	
$V_{CE(sat)}$	Collector-emitter saturation voltage	6	I_I = 250 µA ,	I_C = 100 mA		0.9	1.1		0.9	1.1	V
			I_I = 350 µA,	I_C = 200 mA		1	1.3		1	1.3	
			I_I = 500 µA ,	I_C = 350 mA		1.2	1.6		1.2	1.6	
V_F	Clamp-diode forward voltage	8	I_F = 350 mA			1.7	2		1.7	2	V
I_{CEX}	Collector cutoff current	1	V_{CE} = 100 V,	I_I = 0			50			50	µA
			V_{CE} = 100 V, T_A = 70°C	I_I = 0			100			100	
		2		V_I = 1 V						500	
$I_{I(off)}$	Off-state input current	3	V_{CE} = 50 V, T_A = 70°C	I_C = 500 µA,	50	65		50	65		µA
I_I	Input current	4	V_I = 3.85 V			0.93	1.35				mA
			V_I = 5 V						0.35	0.5	
			V_I = 12 V						1	1.45	
I_R	Clamp-diode reverse current	7	V_R = 100 V				50			50	µA
			V_R = 100 V,	T_A = 70°C			100			100	
C_i	Input capacitance		V_I = 0,	f = 1 MHz		15	25		15	25	pF

switching characteristics, T_A = 25°C free-air temperature

PARAMETER		TEST CONDITIONS	MIN	TYP	MAX	UNIT
t_{PLH}	Propagation delay time, low-to-high-level output	V_S = 50 V, R_L = 163 Ω, C_L = 15 pF, See Figure 9		0.25	1	µs
t_{PHL}	Propagation delay time, high-to-low-level output			0.25	1	µs
V_{OH}	High-level output voltage after switching	V_S = 50 V, I_O ≈ 300 mA, See Figure 10	V_S−20			mV

PARAMETER MEASUREMENT INFORMATION

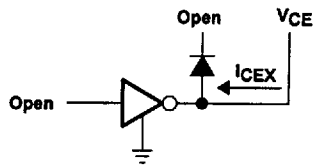

Figure 1. I_{CEX}

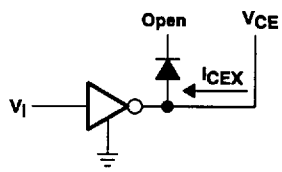

Figure 2. I_{CEX}

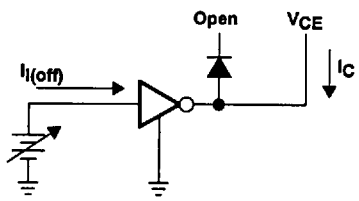

Figure 3. $I_{I(off)}$

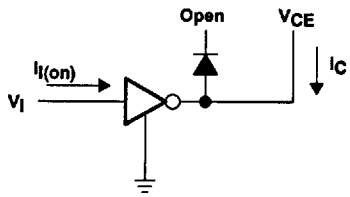

Figure 4. I_I

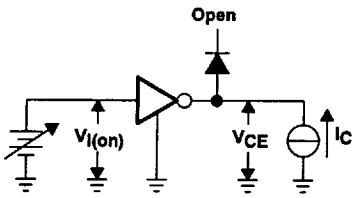

Figure 5. $V_{I(on)}$

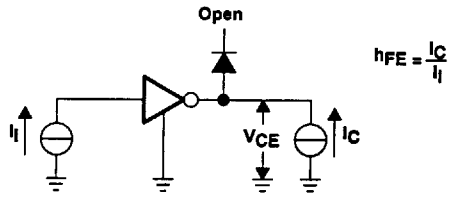

NOTE: I_I is fixed for measuring $V_{CE(sat)}$, variable for measuring h_{FE}.

Figure 6. h_{FE}, $V_{CE(sat)}$

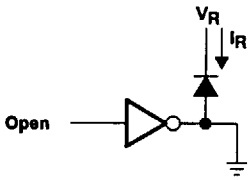

Figure 7. I_R

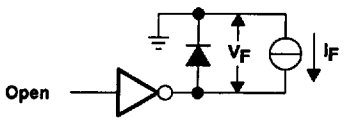

Figure 8. V_F

PARAMETER MEASUREMENT INFORMATION

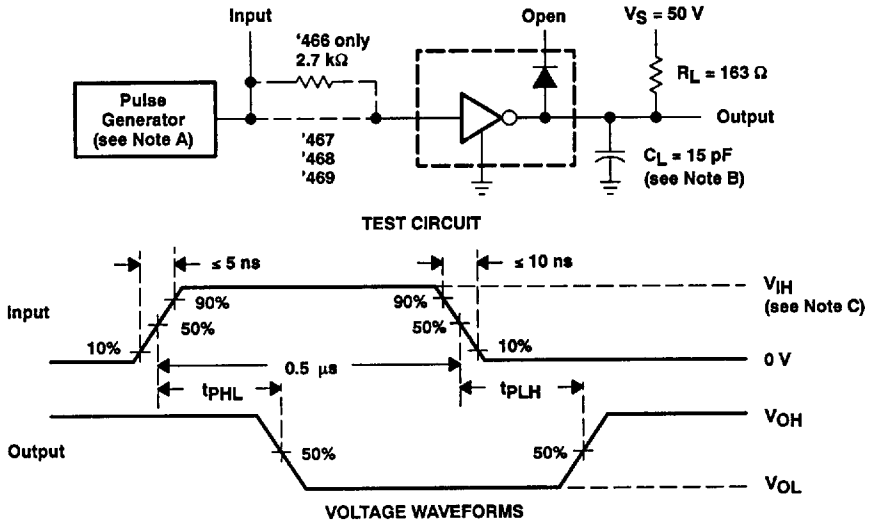

Figure 9. Test Circuit and Voltage Waveforms

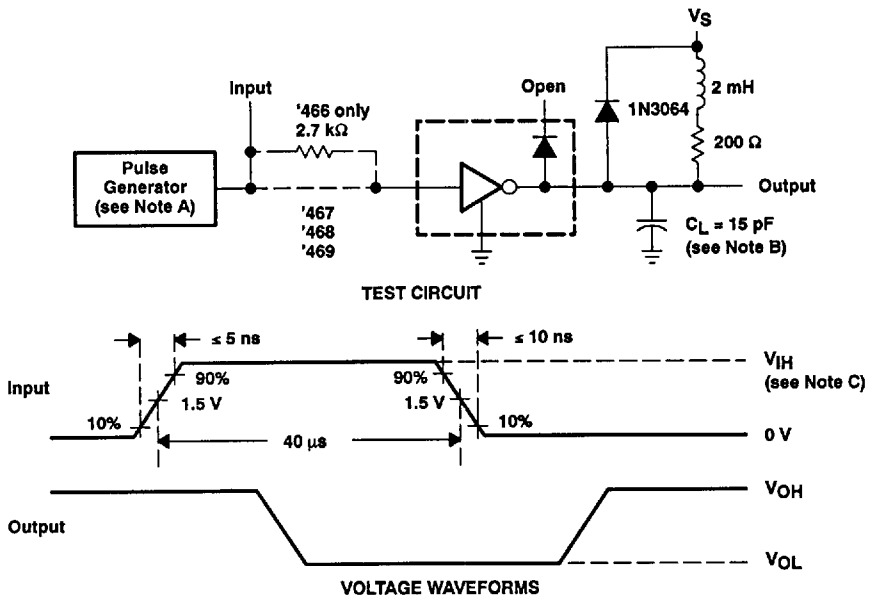

Figure 10. Latch-Up Test Circuit and Voltage Waveforms

NOTES: A. The pulse generator has the following characteristics: PRR = 12.5 kHz, Z_O = 50 Ω.
B. C_L includes probe and jig capacitance.
C. For testing the '466 and '468, V_{IH} = 3 V; for the '467, V_{IH} = 13 V; for the '469, V_{IH} = 8 V.

TYPICAL CHARACTERISTICS

COLLECTOR-EMITTER SATURATION VOLTAGE vs COLLECTOR CURRENT (ONE DARLINGTON)

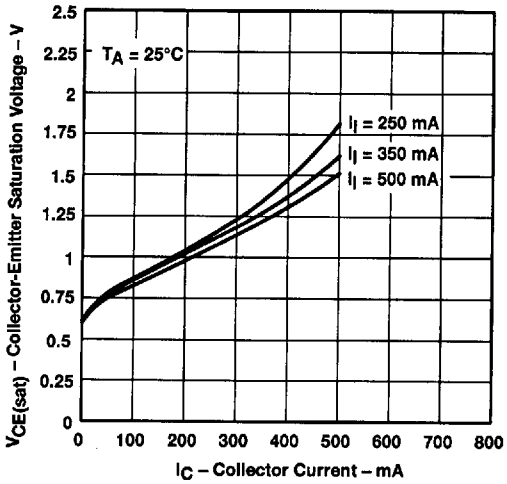

Figure 11

COLLECTOR-EMITTER SATURATION VOLTAGE vs COLLECTOR CURRENT (TWO DARLINGTONS PARALLELED)

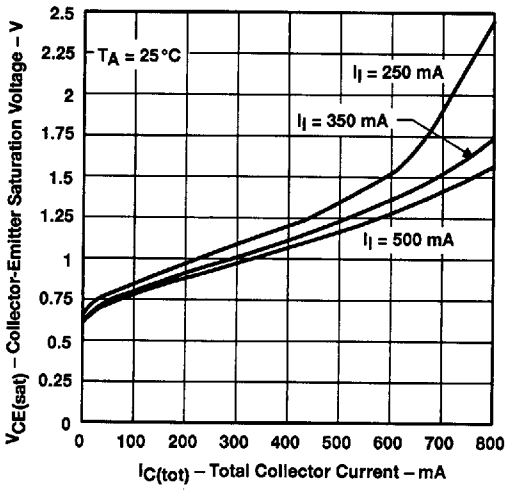

Figure 12

COLLECTOR CURRENT vs INPUT CURRENT

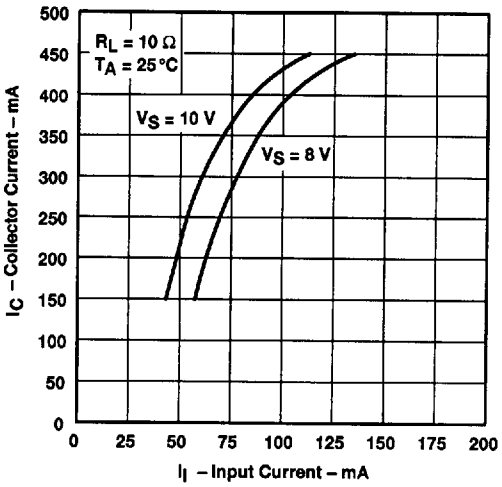

Figure 13

THERMAL INFORMATION

D PACKAGE
MAXIMUM COLLECTOR CURRENT
vs
DUTY CYCLE

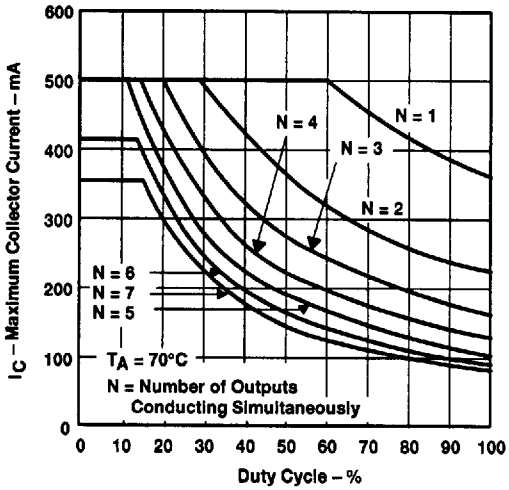

Figure 14

N PACKAGE
MAXIMUM COLLECTOR CURRENT
vs
DUTY CYCLE

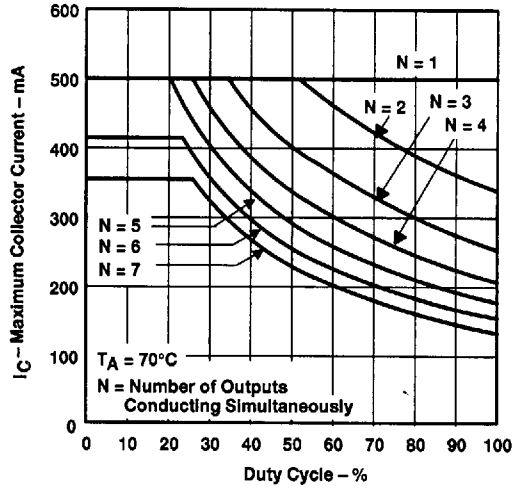

Figure 15

APPLICATION INFORMATION

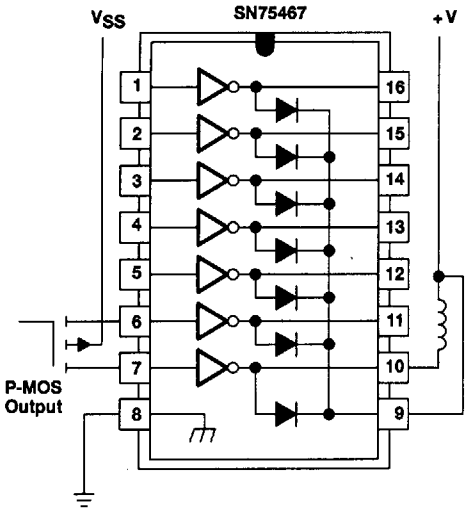

Figure 16. P-MOS to Load

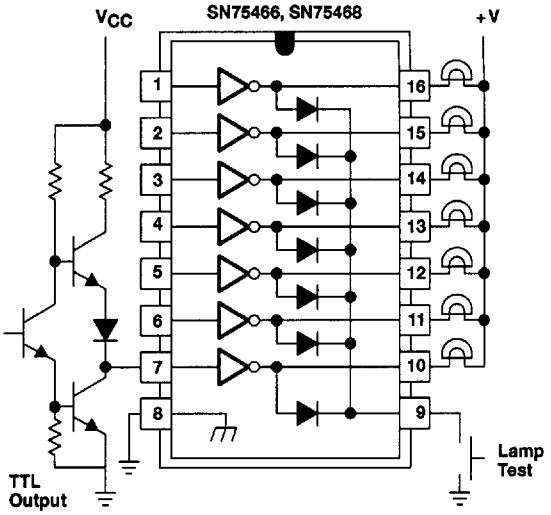

Figure 17. TTL to Load

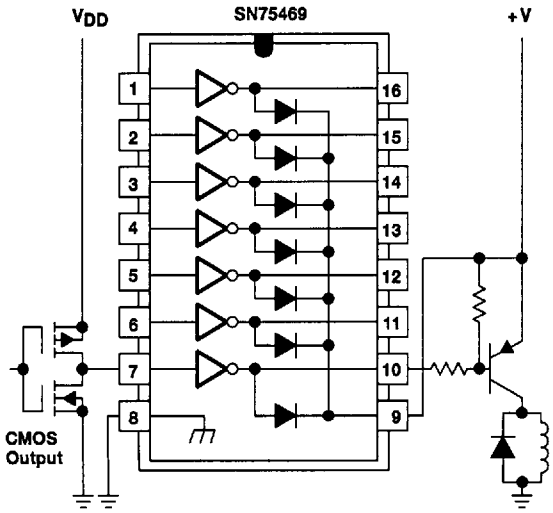

Figure 18. Buffer for Higher Current Loads

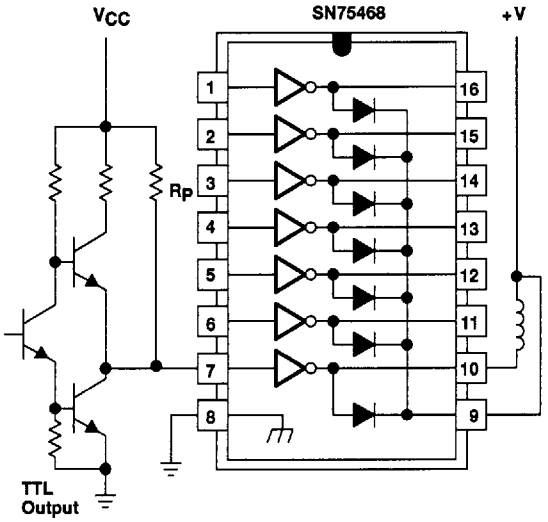

Figure 19. Use of Pullup Resistors to Increase Drive Current