www.DataSheet4U.com

MN3102	CMOS Clock Generator/Driver for Low Voltage Operation BBD	V_{DD}=−0.3~+12V V_I=−0.3~V_{DD}+0.3V V_O=−0.3~V_{DD}+0.3V P_D=200mW Topr=−10~+70℃ Tstg=−30~+125℃	Supply Current	I_{DD}	Without load Clock output 40kHz		0.5		mA
			Power Consumption	P_{tot}			2.5		mW
			"H" Level Input Voltage (OX1)	V_{IH}		V_{DD}−1		V_{DD}	V
			"L" Level Input Voltage (OX1)	V_{IL}		0		1	V
			"H" Level Output Current (OX2)	I_{OH1}	V_O=4V	0.5			mA
			"L" Level Output Current (OX2)	I_{OL1}	V_O=1V	0.4			mA
			"H" Level Output Current (OX3)	I_{OH2}	V_O=4V	0.7			mA
			"L" Level Output Current (OX3)	I_{OL2}	V_O=1V	1			mA
		Operating Condition	"H" Level Output Current (Cp1, CP2)	I_{OH3}	V_O=4V	5			mA
			"L" Level Output Current (CP1, CP2)	I_{OL3}	V_O=1V	5			mA
		V_{DD}=5V	Output Voltage ($V_{GG(OUT)}$)	$V_{GG(OUT)}$			4.67		V
			* VGG voltage supply for Matsushita low voltage operation BBDS. The voltage might not be suitable for other maker's.						

DataSheet4U.com

www.DataSheet4U.com

Block Diagram

MN3101 (Package L—9, 8—Lead Plastic DIL)

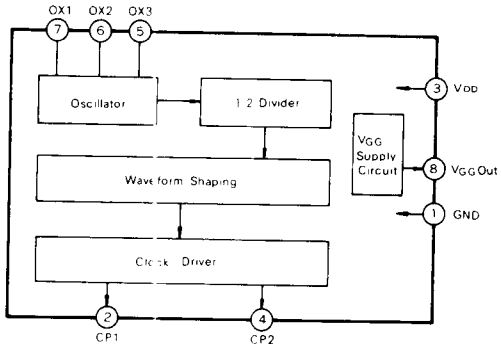

MN3102 (Package L—9, 8—Lead Plastic DIL)

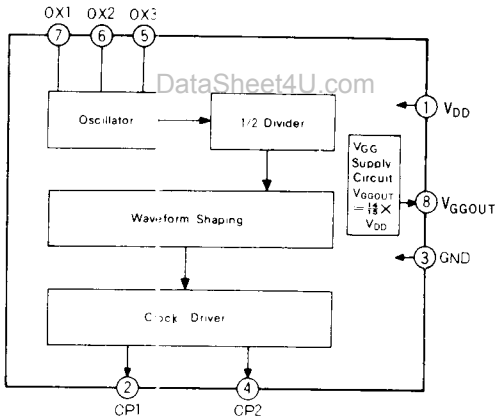

DataSheet4U.com

MN133 (Package L—12, 14—Lead Plastic DIL)

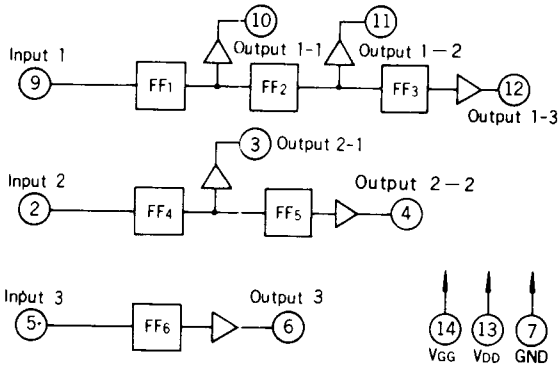

DataSheet4U.com