查询MC145512供应商 捷多邦，专业PCB打样工厂，24小时加急出货

MOTOROLA

MC145412
MC145413
MC145512

Advance Information

Pulse/Tone Repertory Dialer
Low Power Silicon-Gate CMOS

The MC145412/13 and MC145512 are silicon gate, monolithic CMOS integrated circuits which convert keyboard inputs into either pulse or DTMF outputs. They are packaged in a standard 18 pin (0.3" wide) plastic DIP.

- 3×4 or 4×4 Keyboard Compatibility Which Allows the Use of 2-of-7, 2-of-8, or Form A Type Keyboards
- MC145413 Adds Keyboard Selectable Pause Switch Function
- Single Pin Switchable Between DTMF, 10 pps and 20 pps
- 500 Hz Tone Signal Output in the Pulse Dialing Mode
- Memory Storage for Ten 18 Digit Numbers, Including Last Number Redial
- Uses 3.579545 MHz Colorburst Crystal
- Telephone Line Powered
- Silicon Gate CMOS Technology for 1.7-5.5 V Low Power Operation
- Stand Alone DTMF Dialer/Stand Alone Pulse Dialer
- Mute Output Used to Isolate Receiver from Dialing Output
- Memory Programming Options by Keyboard Configuration

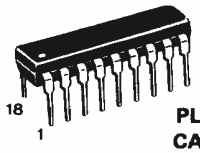

PLASTIC CASE 707

Ordering Information

MC145 X X X X
- P Plastic
- 4 40/60 M/B Ratio
- 5 32/68 M/B Ratio

PIN ASSIGNMENT

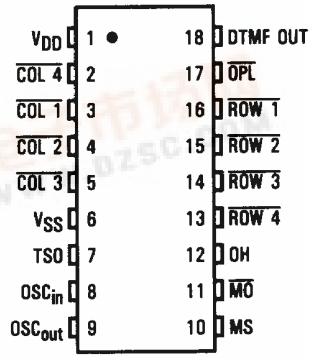

BLOCK DIAGRAM

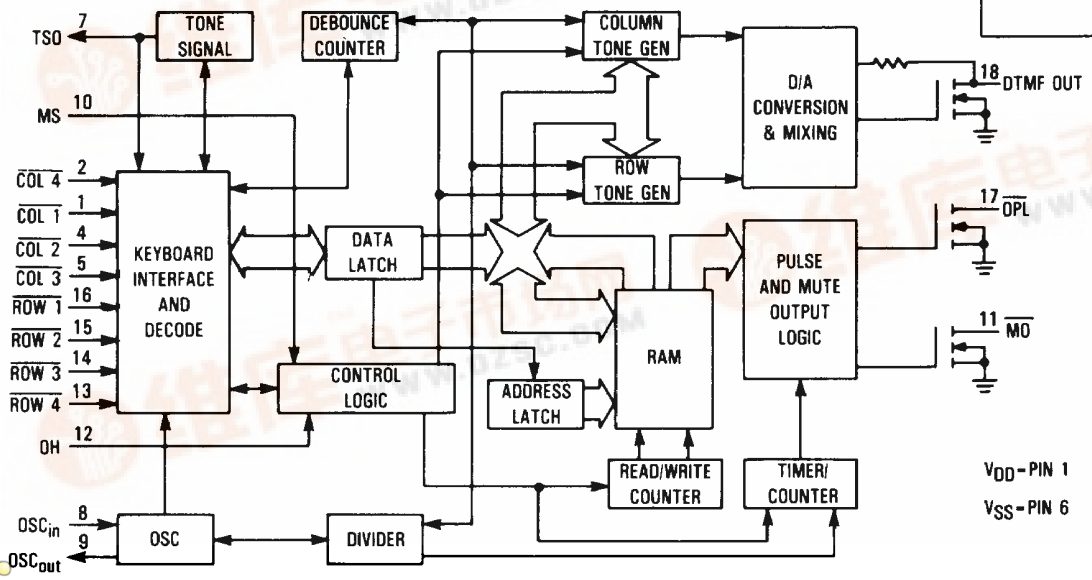

找PDF 维库一下 pdf.dzsc.com