查询TA8720AN供应商 捷多邦，专业PCB打样工厂，24小时加急出货

TOSHIBA BIPOLAR LINEAR INTEGRATED CIRCUIT SILICON MONOLITHIC

TA8720AN

AV SWITCH FOR COLOR TV WITH S-TERMINAL

The TA8720AN is an IC used for switching of 4-inputs 3 circuits of sound (L, R) and video signals.

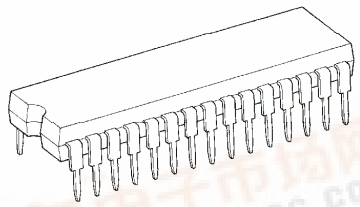

SDIP30-P-400-1.78

Weight : 1.99g (Typ.)

FEATURES

- Audio section (2 channels for a STEREO signal)

  Inputs : Three inputs for external signals
  An input for an internal TV signal

  Outputs : A switched and selected output
  Sound Mute

- Video section

  Inputs : Two inputs for external signal (Sync negative)
  : YC inputs for S-VHS
  : An input for and internal TV signal
  (Sync negative or positive)

  Outputs : Monitor output
  (YC MIX circuit for S-VHS is built-in)
  : Y signal output
  : Chroma signal output

961001EBA2

- TOSHIBA is continually working to improve the quality and the reliability of its products. Nevertheless, semiconductor devices in general can malfunction or fail due to their inherent electrical sensitivity and vulnerability to physical stress. It is the responsibility of the buyer, when utilizing TOSHIBA products, to observe standards of safety, and to avoid situations in which a malfunction or failure of a TOSHIBA product could cause loss of human life, bodily injury or damage to property. In developing your designs, please ensure that TOSHIBA products are used within specified operating ranges as set forth in the most recent products specifications. Also, please keep in mind the precautions and conditions set forth in the TOSHIBA Semiconductor Reliability Handbook.
- The products described in this document are subject to foreign exchange and foreign trade control laws.
- The information contained herein is presented only as a guide for the applications of our products. No responsibility is assumed by TOSHIBA CORPORATION for any infringements of intellectual property or other rights of the third parties which may result from its use. No license is granted by implication or otherwise under any intellectual property or other rights of TOSHIBA CORPORATION or others.
- The information contained herein is subject to change without notice.

找PDF 维库一下 pdf.dzsc.com

BLOCK DIAGRAM

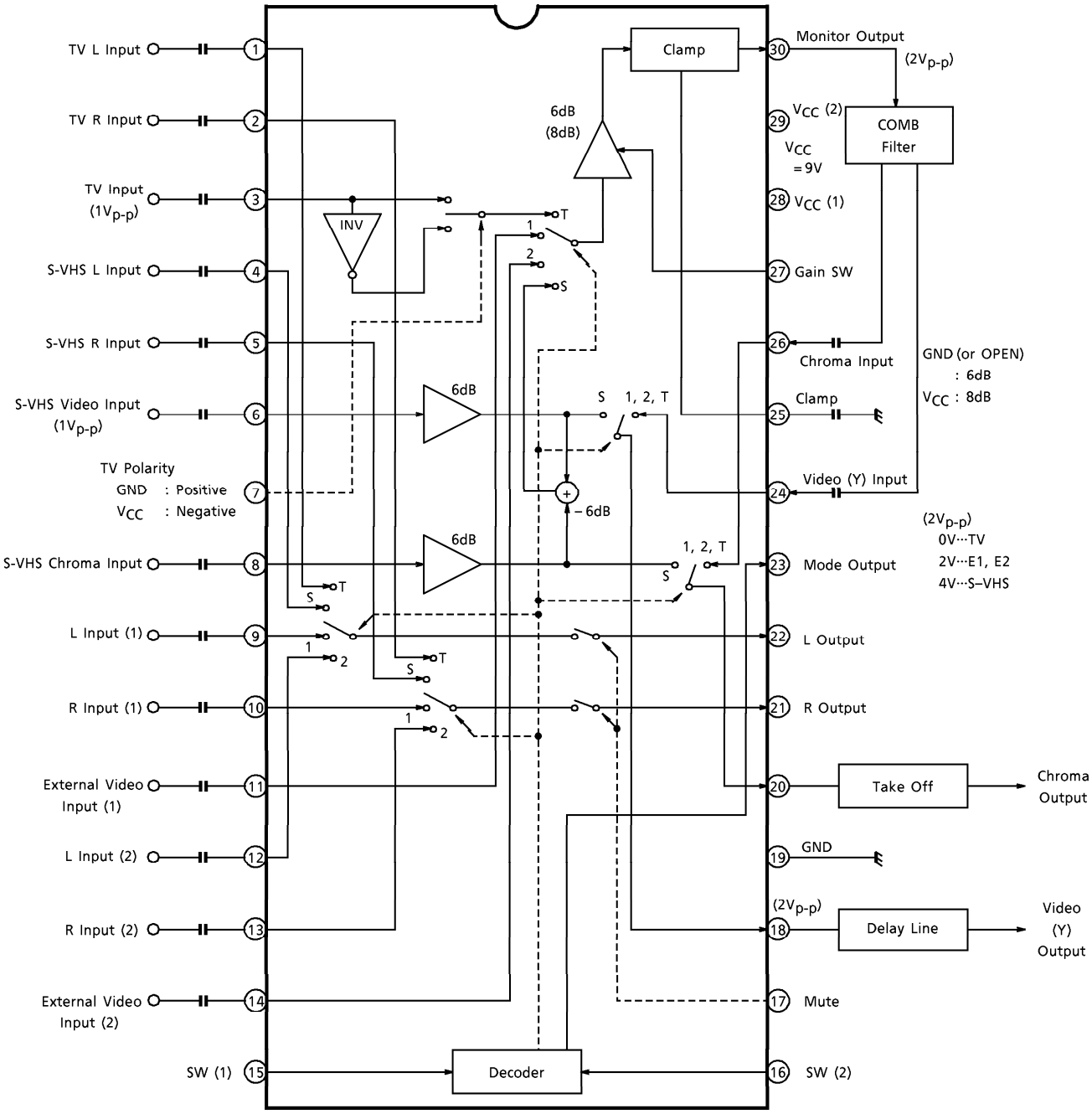

TERMINAL INTERFACE CIRCUIT

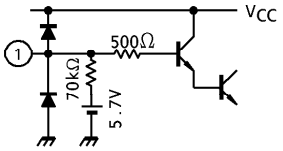

Pin 2, 4, 5, 9, 10, 12, 13 are same.

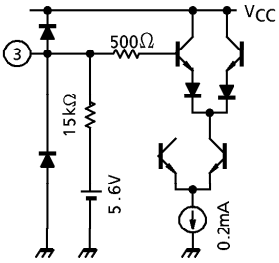

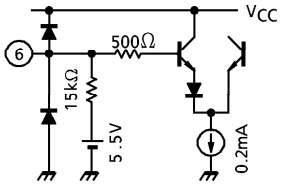

Pin 8 is same.

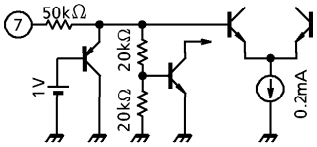

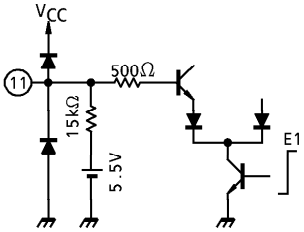

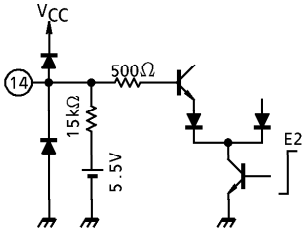

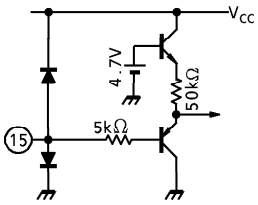

Pin 16 is same.

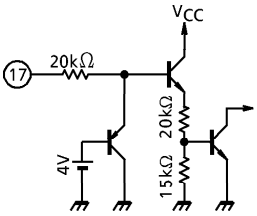

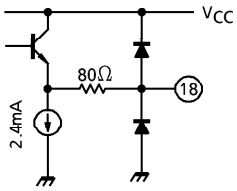

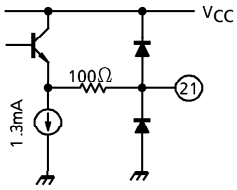

Pin 22 is same.

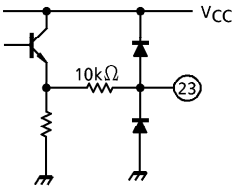

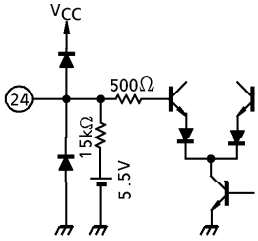

Pin 26 is same.

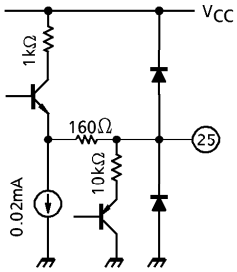

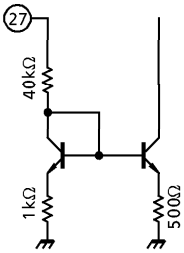

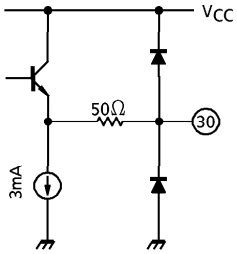

MAXIMUM RATINGS (Ta = 25°C)

CHARACTERISTIC	SYMBOL	RATING	UNIT
Power Supply Voltage	$V_{CC\ max}$	15	V
Input Terminal Signal Voltage	$e_{in\ max}$	3	$V_{p\text{-}p}$
Input Terminal Voltage	$V_{in\ max}$	GND − 0.3V~V_{CC} + 0.3V	—
Power Dissipation	$P_{D\ max}$	1.6 (Note)	W
Operating Temperature	T_{opr}	− 20~65	°C
Storage Temperature	T_{stg}	− 55~150	°C

(Note) When using the device at above Ta = 25°C, decrease the power dissipation by 12.8mW for each increase of 1°C.

LOGIC TABLE

		SW2 [PIN 16]	
		HIGH LEVEL	LOW LEVEL
SW1 [PIN 15]	HIGH LEVEL	TV	E1
	LOW LEVEL	S-VHS	E2

RECOMMENDED POWER SUPPLY VOLTAGE

PIN No.	PIN NAME	MIN.	TYP.	MAX.	UNIT
28	9V Power Supply (V_{CC})	8.1	9.0	9.9	V
29					

ELECTRICAL CHARACTERISTICS

DC CHARACTERISTICS (Unless otherwise specified, V_{CC} = 9V, Ta = 25°C)

DC voltage characteristic

PIN No.	PIN NAME	SYMBOL	MIN.	TYP.	MAX.	UNIT	NOTE
1	TV L Input	V1	5.2	5.7	6.2	V	—
2	TV R Input	V2	5.2	5.7	6.2		
3	TV Input	V3	5.1	5.6	6.1		
4	S-VHS L Input	V4	5.2	5.7	6.2		
5	S-VHS R Input	V5	5.2	5.7	6.2		
6	S-VHS Video Input	V6	5.0	5.5	6.0		
7	TV Polarity Switch	V7	—	—	—		
8	S-VHS Chroma Input	V8	5.0	5.5	6.0		
9	L Input (1)	V9	5.2	5.7	6.2		
10	R Input (1)	V10	5.2	5.7	6.2		
11	External Video Input (1)	V11	5.0	5.5	6.0		
12	L Input (2)	V12	5.2	5.7	6.2		
13	R Input (2)	V13	5.2	5.7	6.2		
14	External Video Input (2)	V14	5.0	5.5	6.0		
15	Switch (1)	V15	—	—	—		
16	Switch (2)	V16	—	—	—		
17	Mute	V17	—	—	—		
18	Video (Y) Output	V18	3.5	4.0	4.5		
19	GND	V19	—	—	—		
20	Chroma Output	V20	3.5	4.0	4.5		
21	R Output	V21	3.8	4.3	4.8		
22	L Output	V22	3.8	4.3	4.8		
23	Mode Output	V23	1.5	2.0	2.5		
24	Video (Y) Input	V24	5.0	5.5	6.0		
25	Clamp	V25	2.6	3.1	3.6		
26	Chroma Input	V26	5.0	5.5	6.0		
27	Gain Switch	V27	—	—	—		
28	V_{CC} (1)	V28	—	V_{CC}	—		
29	V_{CC} (2)	V29	—	V_{CC}	—		
30	Monitor Output	V30	2.4	2.9	3.4		

Supply current

CHARACTERISTIC	SYMBOL	MIN.	TYP.	MAX.	UNIT	NOTE
Supply Current (Pin 28 : V_{CC1})	I_{CC1}	4.0	6.0	9.0	mA	—
Supply Current (Pin 29 : V_{CC2})	I_{CC2}	14	21	31		
Total Supply Current ($I_{CC1} + I_{CC2}$)	I_{CC}	18	27	40		

Input resistance

PIN No.	PIN NAME	SYMBOL	MIN.	TYP.	MAX.	UNIT	NOTE
3	TV Input	R3	10	15	21	kΩ	Supply an external voltage which is 0.5V higher than open voltage. Measure the flow-in current. Calculate the resistor value.
6	S-VHS Video Input	R6					
8	S-VHS Chroma Input	R8					
11	External Video Input (1)	R11					
14	External Video Input (2)	R14					
24	Video (Y) Input	R24					
26	Chroma Input	R26					
1	TV L Input	R1	48	70	98		
2	TV R Input	R2					
4	S-VHS L Input	R4					
5	S-VHS R Input	R5					
9	L Input (1)	R9					
10	R Input (1)	R10					
12	L Input	R12					
13	R Input	R13					

Output resistance

PIN No.	PIN NAME	SYMBOL	MIN.	TYP.	MAX.	UNIT	NOTE
18	Video (Y) Output	R18	—	100	—	Ω	Measure the terminal voltage variation when the flow-in current is 100μA. Calculate the resistor value.
20	Chroma Output	R20	—	100	—		
21	R Output	R21	—	130	—		
22	L Output	R22					
23	Mode Output	R23	—	11	—	kΩ	
30	Monitor Output	R30	—	70	—	Ω	

AC CHARACTERISTIC (Unless otherwise specified, V_{CC} = 9V, Ta = 25°C)

CHARACTERISTIC	SYMBOL	TEST CIR-CUIT	SWg	SW7	SW15	SW16	SW17	V3	OTHER	TEST CONDITION	MIN.	TYP.	MAX.	UNIT
Input Dynamic Range	V_{dY}	—	a	a	b	b	a	5V	SW 3 : b Other : a	(1) V2 : 15kHz sine wave (2) Vary the amplitude of V2. Measure the amplitude of V2 when the output signal of pin 30 is distorted.	1.7	2.2	—	$V_{p\text{-}p}$
					a	b			SW 6 : b Other : a					
									SW 8 : b Other : a					
					b	a			SW 11 : b Other : a					
					a	a			SW 14 : b Other : a					
				b	b	b			SW 3 : b Other : a					
	V_{dY}^{YC}			a	b	b			SW 24 : a Other : b	(1) Ditto (2) Vary the amplitude of V2. Measure the amplitude of V2 when the output signals of pin 18 and 20 are distorted.	5.5	6.5	—	
									SW 26 : a Other : b					
	V_{dY}^{S}				a				SW 6 : a Other : b		1.9	2.4	—	
									SW 8 : a Other : b					

CHARACTERISTIC	SYMBOL	TEST CIR-CUIT	SWg	SW7	SW15	SW16	SW17	V3	OTHER	TEST CONDITION	MIN.	TYP.	MAX.	UNIT
Video Gain	G_V	—	a	a	b	b	a	5V	SW 3 : b Other : a	(1) V2 : 15kHz, $1V_{p-p}$ sine wave (2) Measure the pin 30 signal amplitude for each mode.	5.0	6.0	7.0	dB
					a	b			SW 6 : b Other : a					
									SW 8 : b Other : a					
					b	a			SW 11 : b Other : a					
					a	a			SW 14 : b Other : a					
				b	b	b			SW 3 : b Other : a					
	ΔG_V			a					SW 3 : b SW 27 : b Other : a	(1), (2) Ditto (3) Calculate the difference between G_V.	1.5	2.0	2.5	
	G_{Yc}			a	b	b			SW 24 : a Other : b	(1) Ditto (2) Measure the pin 30 signal amplitude for each mode.	−0.5	0	0.5	
									SW 26 : a Other : b					
	G_{Yc}^{S}				a				SW 6 : a Other : b		5.0	6.0	7.0	
									SW 8 : a Other : b					

CHARACTERISTIC	SYMBOL	TEST CIR-CUIT	SWg	SW7	SW15	SW16	SW17	V3	OTHER	TEST CONDITION	MIN.	TYP.	MAX.	UNIT
Video Cross Talk	C_M	—	a	a	b	b	a	5V	SW 3, 6, 8, 11, 14 : a→b→a Other : a	(1) V2 : 4.43MHz, $1V_{p-p}$ sine wave (2) TV mode SW 3 : B Measure the output level of pin 30 as 0dB reference. Measure the output level of pin 30 when the input pin change to 6, 8, 11, 14 for each mode.	50	64	—	dB
					a	b								
					b	a								
					a	a								
				b	b	b								

CHARACTERISTIC	SYMBOL	TEST CIR-CUIT	SWg	SW7	SW15	SW16	SW17	V3	OTHER	TEST CONDITION	MIN.	TYP.	MAX.	UNIT
Cross Talk Between YC	C_{YC}	—	a	a	b	b	a	5V	SW24 b→a SW26 a→b Other : a	(1) V2 : 4.43MHz, $1V_{p\text{-}p}$ sine wave (2) SW24 : b Measure the output level of pin 18 as 0dB reference. Measure the output level of pin 18 when V2 is applied to pin 26. (3) SW26 : b Measure the output level of pin 20 as 0dB reference. Measure the output level of pin 20 when V2 is applied to pin 24.	50	60	—	dB
					a					Repeat (1), (2), (3)				

CHARACTERISTIC	SYMBOL	TEST CIR-CUIT	SWg	SW7	SW15	SW16	SW17	V3	OTHER	TEST CONDITION	MIN.	TYP.	MAX.	UNIT
Frequency Band Width	F_M	—	a	a	b	b	a	5V	SW 3 : b Other : a	(1) V2 : $1V_{p-p}$, sine wave (2) V2 : 100kHz Measure the amplitude of pin 30. (3) Set the frequency of V2 at −3dB point. Read the frequency of V2.	10	24	—	MHz
					a	b			SW 6 : b Other : a					
									SW 8 : b Other : a					
					b	a			SW 11 : b Other : a					
					a	a			SW 14 : b Other : a					
				b	b	b			SW 3 : b Other : a					
	F_{YC}			a	b	b			SW 24 : b Other : a	(1)~(3) Same as above. (4) Read the frequency of V2 when the outputs are pin 18 and 20.	10	56	—	
									SW 26 : b Other : a					
					a				SW 6 : b Other : a		10	27	—	
									SW 8 : b Other : a					

CHARACTERISTIC	SYMBOL	TEST CIR-CUIT	SWg	SW7	SW15	SW16	SW17	V3	OTHER	TEST CONDITION	MIN.	TYP.	MAX.	UNIT
Clamp Level	CL	—	a	a	b	b	a	5V	SW 3 : b Other: a	(1) V2 : PAL TV signal (2) SW3 : a Measure the voltage (υ1) of pin 30. (3) SW3 : b Calculate υ1 level (%) from the sync tip.	—	21	—	%
Sound Dynamic Range	V_{dY}^{A}	—			adj.	adj.			SW1, 2, 4, 5, 9, 10, 12, 13 : b Other : a	(1) V2 : 1kHz, $1V_{p-p}$ sine wave (2) Measure the amplitude of V2 when the output distortion rate reaches 1.5% for each mode (L and R).	5	6	—	V_{p-p}
Sound Gain	G_A	—								(1) Ditto (2) Measure the L and R output amplitude (υa) for each mode. (3) Calculate $G_A = 20\log va$	−0.5	0	0.5	dB
Sound Frequency Characteristic	fA	—								(1) Ditto (2) Set the frequency (f_A) of V2 at −3dB point. (3) Same as above for each mode.	100	—	—	kHz

CHARACTERISTIC	SYMBOL	TEST CIR-CUIT	SWg	SW7	SW15	SW16	SW17	V3	OTHER	TEST CONDITION	MIN.	TYP.	MAX.	UNIT
Cross Talk Between Source	C_A	—	a	a	b	b	a	5V	SW 4, 5, 9, 10, 12, 13 : b Other : a	(1) V2 : 1kHz, $1V_{p-p}$ sine wave (2) Measure the L and R output amplitude (v). (3) Calculate $20\log v$.	60	72	—	dB
					a	b			SW 1, 2, 9, 10, 12, 13 : b Other : a					
					b	a			SW 1, 2, 4, 5, 12, 13 : b Other : a					
					a	a			SW 1, 2, 4, 5, 9, 10 : b Other : a					
Cross Talk Between L and R Sound Path	C_{LR}	—			adj.	adj.			—	(1) Ditto (2) Measure the R output amplitude when the input channel is L side for each mode, and vice versa.	60	75	—	
Sound Mute Attenuation Level	M_A	—			b	b	a ↓ b		SW1, 2 : b Other: a	(1) Ditto (2) SW17 : a Measure the L and R output amplitude ($v1$). (3) SW17 : b Measure the L and R output amplitude ($v2$). (4) Calculate $20\log(\frac{v2}{v1})$	60	75	—	

CHARACTERISTIC	SYMBOL	TEST CIR-CUIT	SWg	SW7	SW15	SW16	SW17	V3	OTHER	TEST CONDITION	MIN.	TYP.	MAX.	UNIT
SW (1) Threshold Voltage	V_{th} I	—	a	a	adj.	a	a	adj.	SW 11 : b Other : a	(1) V2 : 100kHz, $1V_{p-p}$ sine wave (2) By increasing the level of V3, read the voltage when the output signal appears on pin 30.	1.0	2.0	3.0	V
SW (2) Threshold Voltage	V_{th} II	—			a	adj.			SW 14 : b Other : a	(1) Ditto (2) By increasing the level of V3, read the voltage when the output signal disappears on pin 30.	1.0	2.0	3.0	
Sound Mute SW Threshold Voltage	$V_{th}M$	—			a	a	adj.		SW 12 : a Other : b	(1) Ditto (2) By increasing the level of V3, read the voltage when the output signal disappeares on pin 22.	1.3	2.3	3.3	
TV Polarity Threshold Voltage	$V_{th}P$	—	—	—	—	—	—	—	—	—	—	4.0	—	

CHARACTERISTIC	SYMBOL	TEST CIR-CUIT	SWg	SW7	SW15	SW16	SW17	V3	OTHER	TEST CONDITION	MIN.	TYP.	MAX.	UNIT
TV Mode	—	—	a	a	b	b	a	5V	SW1, 2, 3 : b Other : a	(1) V2 : 100kHz, $1V_{p-p}$ sine wave (2) Confirm the output signal appears on pin 18, 20, 21, 22, 23.	—	—	—	—
S Mode		—			a				SW 4, 5, 6, 8, 24, 26 : b Other : a					
E1 Mode		—			b	a			SW 9, 10, 11 : b Other : a					
E2 Mode		—			a				SW 12, 13, 14 : b Other : a					

CHARACTERISTIC	SYMBOL	TEST CIR-CUIT	SWg	SW7	SW15	SW16	SW17	V3	OTHER	TEST CONDITION	MIN.	TYP.	MAX.	UNIT
TV Polarity Inversion Mode	—	—	a	a or b	b	b	—	5V	SW 3 : b Other : a	(1) SW7 : a Check the signals of V2 and pin 30 are in phase. (2) SW7 : b Check the signals of V2 and pin 30 are opposite phase.	—	—	—	—
Sound Mute		—		a	adj.	adj.	b		SW 1, 2, 4, 5, 9, 10, 12, 13 : b Other : a	Check the disappearance on pin 21, 22 for each mode.				
Mode Output Voltage	V_M^{TV}	—			b	b			—	Measure the pin 23 voltage for each mode.	—	0	0.2	V
	V_M^{E}				a or b	a					1.7	2.0	2.3	
	V_M^{S}				a	b					3.7	4.1	4.5	

TEST CIRCUIT 1
DC CHARACTERISTIC

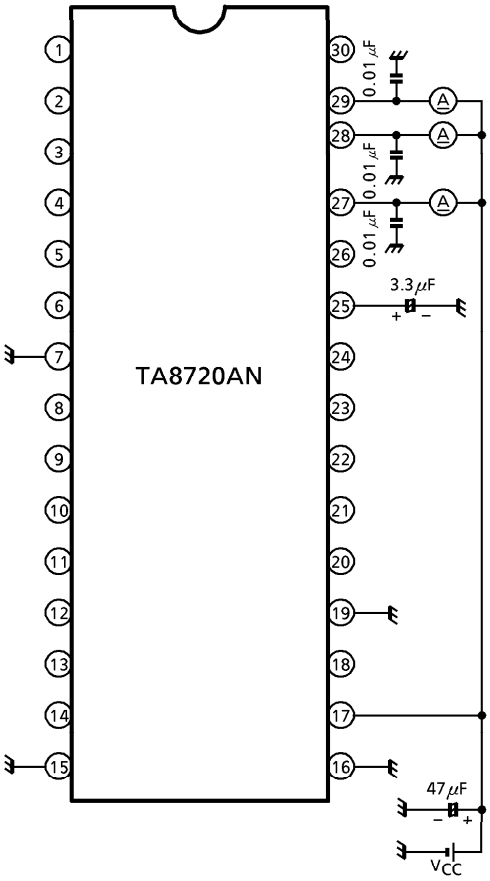

TEST CIRCUIT 2
AC CHARACTERISTIC

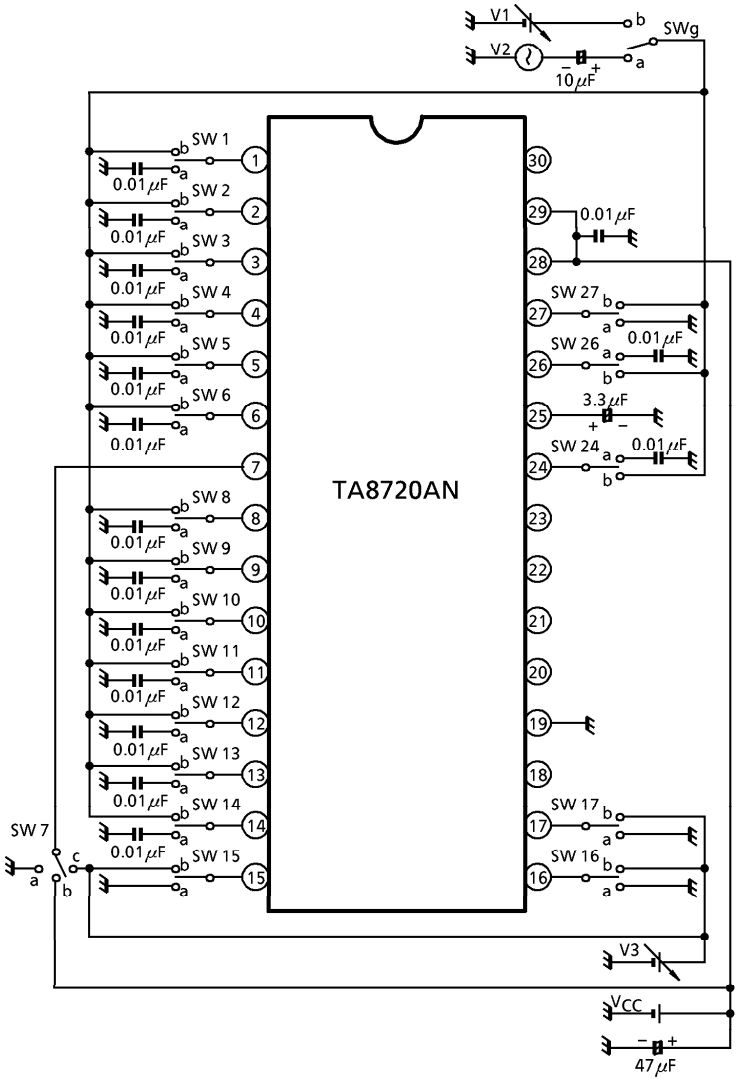

OUTLINE DRAWING

SDIP30-P-400-1.78 Unit : mm

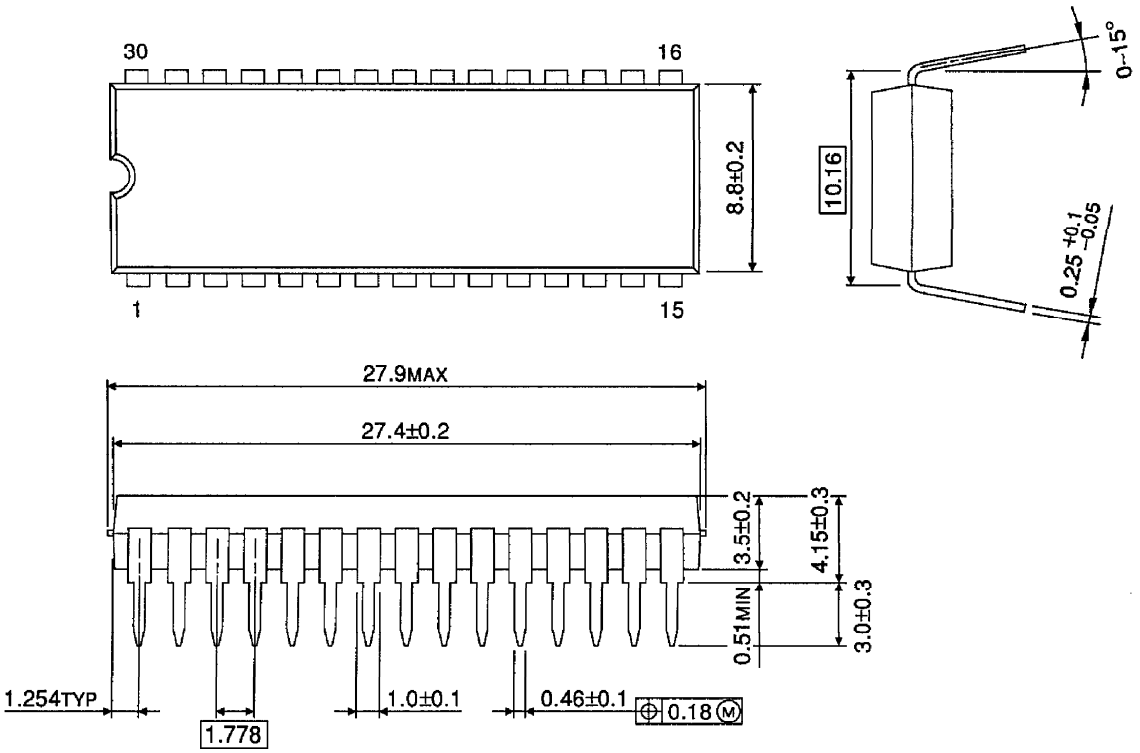

Weight : 1.99g (Typ.)