查询TCA105供应商 捷多邦，专业PCB打样工厂，24小时加急出货

SIEMENS

Threshold Switch

TCA 105

Bipolar IC

3

Features

- Wide range of supply voltage, 4.5 to 30 V
- High output current, 50 mA
- TTL-compatible
- Triggerable with DC signal

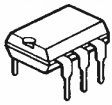

P-DIP-6-1

P-DSO-6

Type	Ordering Code	Package
S TCA 105	Q67000-A527	P-DIP-6-1
S TCA 105 B	Q67000-A587	P-DIP-6-1
S TCA 105 G	Q67000-A988	P-DSO-6 (SMD)

The TCA 105 contains an oscillator stage, a threshold switch, and two anti-valent output stages. The IC is especially suitable for application in proximity switches, light reflection switches, and other contactless switching applications.

找PDF 维库一下 pdf.dzsc.com

TCA 105, TCA 105 B

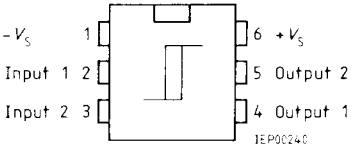

TCA 105 G

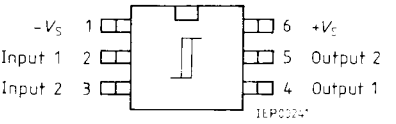

Pin Configuration
(top view)

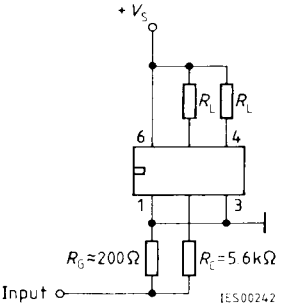

Test Circuit

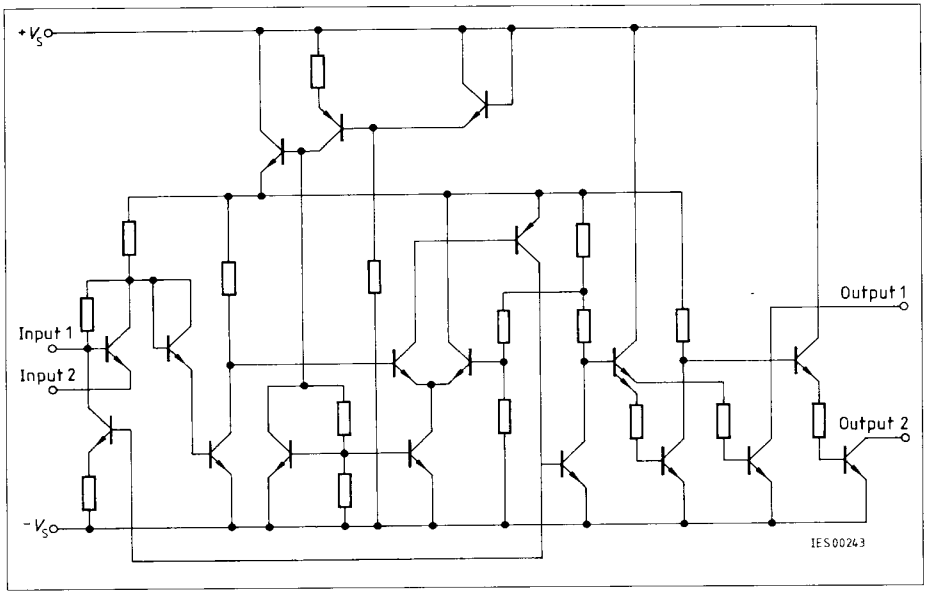

Circuit Diagram

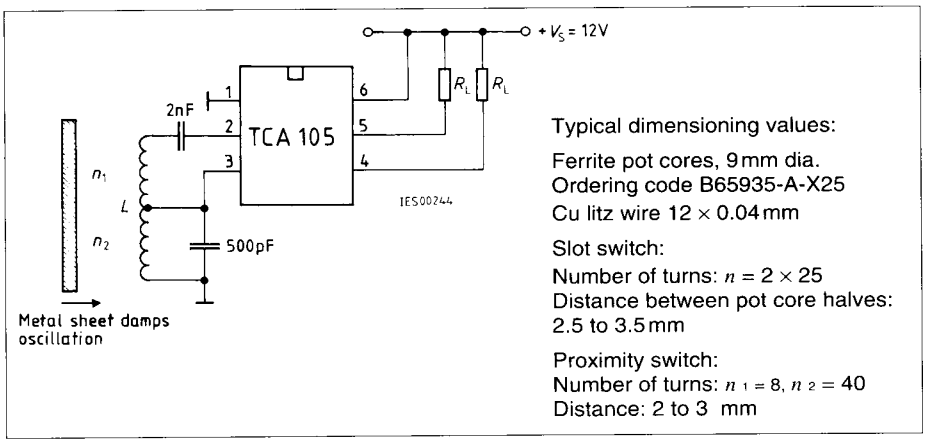

Application Example
Inductive Slot Switch or Proximity Switch

Applications Examples

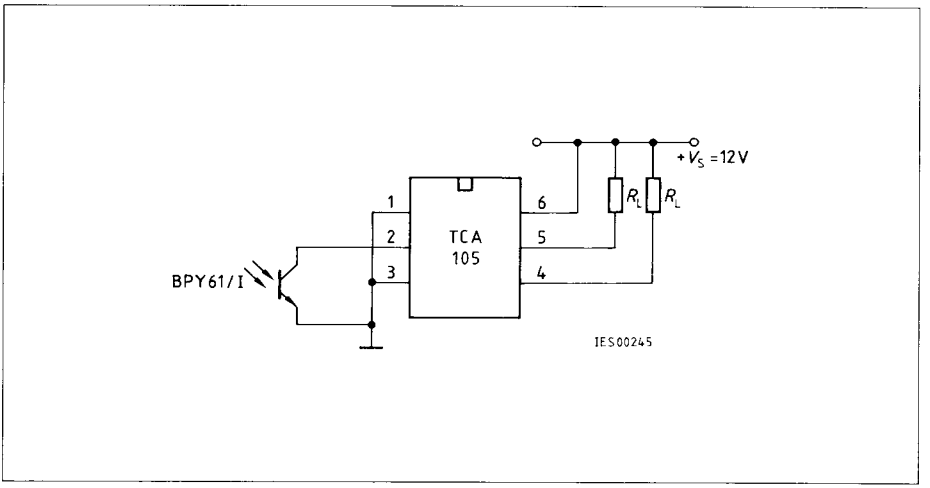

Light-Operated Switch (switching amplifier for phototransistor BPY 61)

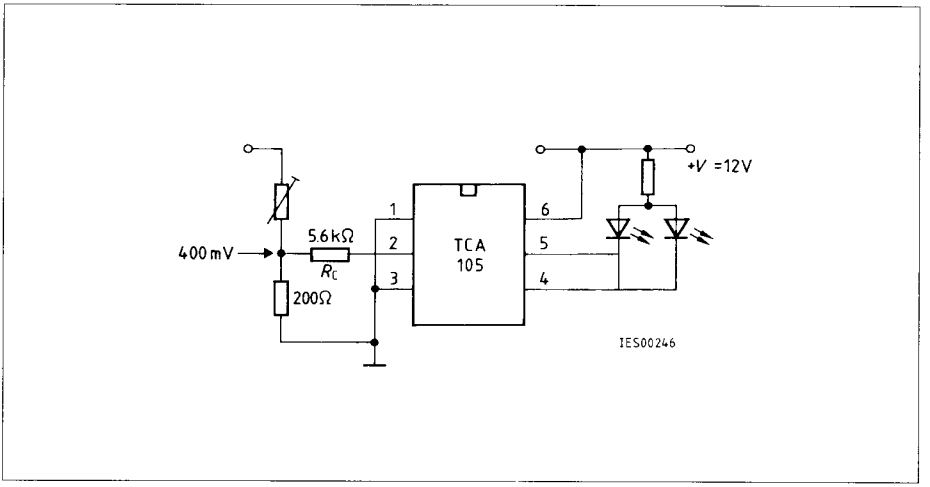

Voltage Monitor

3

Absolute Maximum Ratings

Parameters	Symbol	Limit Values		Unit
		TCA 105	TCA 105 B	
Supply voltage Output voltage (pin 4, pin 5)	V_S V_Q	30 30	20 20	V V
Output current	I_Q	50	50	mA
Switching frequency	f_S	40	40	kHz
Input voltage	V_I	≥ 0 [1]	≥ 0 [1]	V
Junction temperature Storage temperature range	T_j T_{stg}	150 – 55 to 125	150 – 55 to 125	°C °C
Thermal resistance (system – air) TCA 105, TCA 105 B TCA 105 G	 $R_{th\,SA}$ $R_{th\,SA}$	 115 200	 115	 K/W K/W

Operating Range

Supply voltage	V_S	4.75 to 30	4.75 to 20	V
Ambient temperature	T_A	– 25 to 85	– 25 to 85	°C
Oscillating frequency	f_{OSC}	1 to 4.5	1 to 4.5	MHz

[1] Negative input voltages are not permitted

Characteristics
Static measurement, pins 3 and 1 interconnected
V_S = 12 V, T_A = 25 °C, R_C = 5.6 kΩ

Parameters	Symbol	Limit Values			Unit
		min.	typ.	max.	
Supply current	I_S		3.4	5	mA
Input threshold voltage with compensation resistor R_C	V_I	300	400	480	mV
Input threshold current	I_I		– 60		µA
Hysteresis	V_{hy}	20	35	50	mV
L-output voltage I_Q = 16 mA	V_{QL}		0.25	0.35	V
H-output voltage	V_{QH}	corresponds to V_S			
Reverse current, V_S = 30 V and/or 20 V	I_{QH}			60	µA
L-output voltage I_Q = 50 mA	V_{QL}		0.7	1.15	V
Switching time in TTL operation I_Q = 16 mA	t		3		µs

Current Consumption Supply Current versus Supply Voltage

T_A = 25 °C; $R_L = \infty$

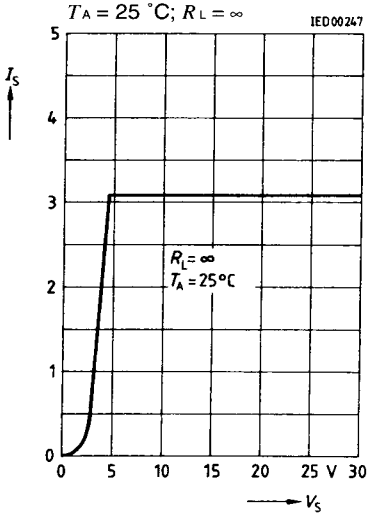

L-Output Voltage versus Output Current

T_A = 25 °C; V_S = 12 V

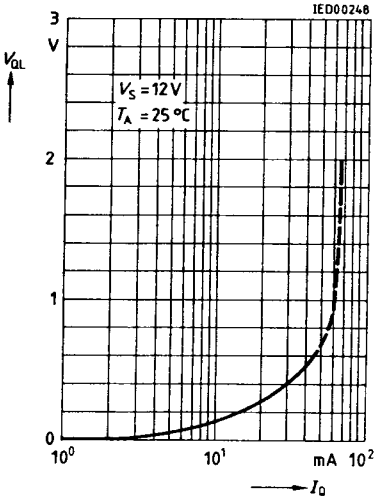

Switching Threshold Input Voltage versus Ambient Temperature

V_S = 12 V; R_C = 0

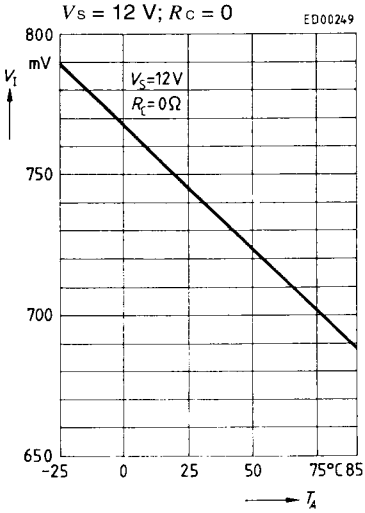

Input Current versus Ambient Temperature

V_S = 12 V; R_C = 5.6 kΩ

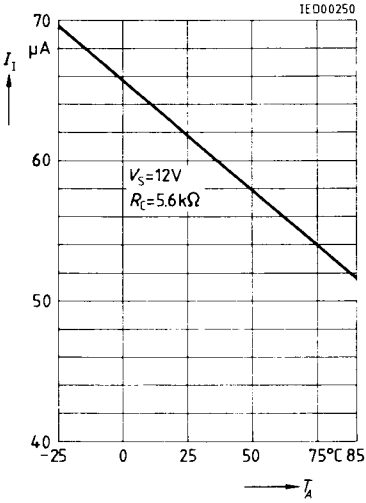

Switching Threshold Input Voltage versus Ambient Temperature

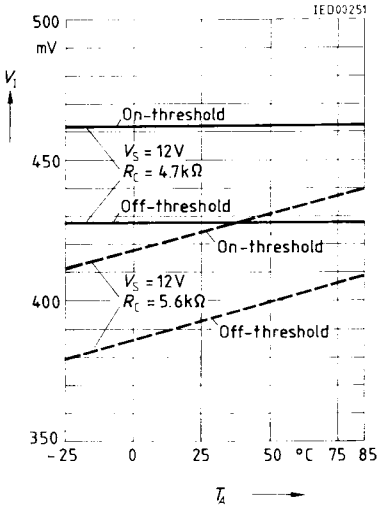

Switching Threshold Input Voltage versus Supply Voltage
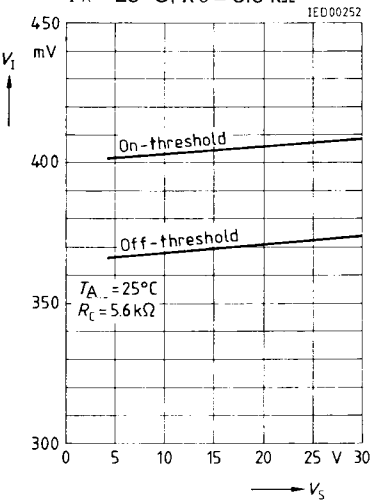
T_A = 25 °C; R_C = 5.6 kΩ