查询HN29V51211T-50H供应商 捷多邦，专业PCB打样工厂，24小时加急出货

HN29V51211T-50H

512M AND type Flash Memory
More than 32,113-sector (542,581,248-bit)

HITACHI

ADE-203-1333A (Z)
Rev. 1.0
Apr. 5, 2002

Description

The Hitachi HN29V51211T-50H is a CMOS Flash Memory with AND type multi-level memory cells. It has fully automatic programming and erase capabilities with a single 3.0 V power supply. The functions are controlled by simple external commands. To fit the I/O card applications, the unit of programming and erase is as small as (2048 + 64) bytes. Initial available sectors of HN29V51211T-50H are more than 32,113 (98% of all sector address) and less than 32,768 sectors.

Features

- On-board single power supply (V_{CC}): V_{CC} = 2.7 V to 3.6 V
- Organization
  - — AND Flash Memory: (2048 + 64) bytes × (More than 32,113 sectors)
  - — Data register: (2048 + 64) bytes
- Multi-level memory cell
  - — 2 bit/per memory cell
- Automatic programming
  - — Sector program time: 1.0 ms (typ)
  - — System bus free
  - — Address, data latch function
  - — Internal automatic program verify function
  - — Status data polling function

找PDF 维库一下 pdf.dzsc.com

- Automatic erase
  - — Single sector erase time: 1.0 ms (typ)
  - — System bus free
  - — Internal automatic erase verify function
  - — Status data polling function
- Erase mode
  - — Single sector erase ((2048 + 64) byte unit)
- Fast serial read access time:
  - — First access time: 50 µs (max)
  - — Serial access time: 50 ns (max)
- Low power dissipation:
  - — I_{CC1} = 2 mA (typ) (Read)
  - — I_{CC2} = 20 mA (max) (Read)
  - — I_{SB2} = 50 µA (max) (Standby)
  - — I_{CC3}/I_{CC4} = 40 mA (max) (Erase/Program)
  - — I_{SB3} = 20 µA (max) (Deep standby)
- The following architecture is required for data reliability.
  - — Error correction: more than 3-bit error correction per each sector read
  - — Spare sectors: 1.8% (579 sectors) (min) within usable sectors

Ordering Information

Type No.	Available sector	Package
HN29V51211T-50H	More than 32,113 sectors	12.0 × 20.00 mm^2 0.5 mm pitch 48-pin plastic TSOP I (TFP-48DA)

Pin Arrangement

48-pin TSOP

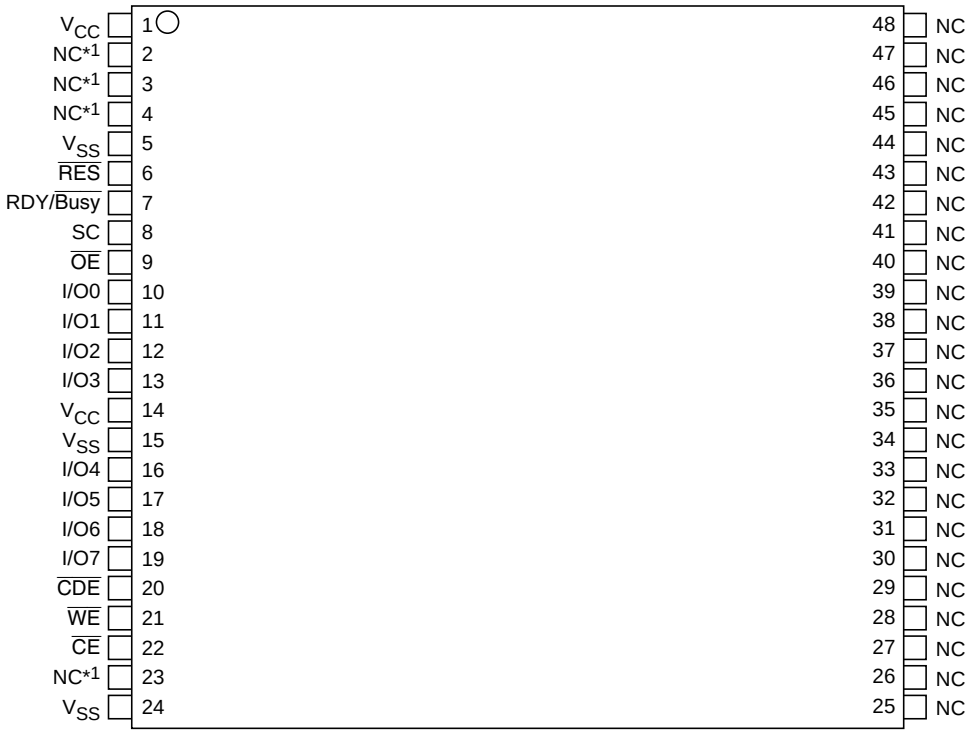

(Top view)

Note: 1. This pin can be used as the V_{SS} pin.

Pin Description

Pin name	Function
I/O0 to I/O7	Input/output
$\overline{CE}$	Chip enable
$\overline{OE}$	Output enable
$\overline{WE}$	Write enable
$\overline{CDE}$	Command data enable
V_{CC}*1	Power supply
V_{SS}*1	Ground
RDY/$\overline{Busy}$	Ready/$\overline{Busy}$
$\overline{RES}$	Reset
SC	Serial clock
NC	No connection

Note: 1. All V_{CC} and V_{SS} pins should be connected to a common power supply and a ground, respectively.

Block Diagram

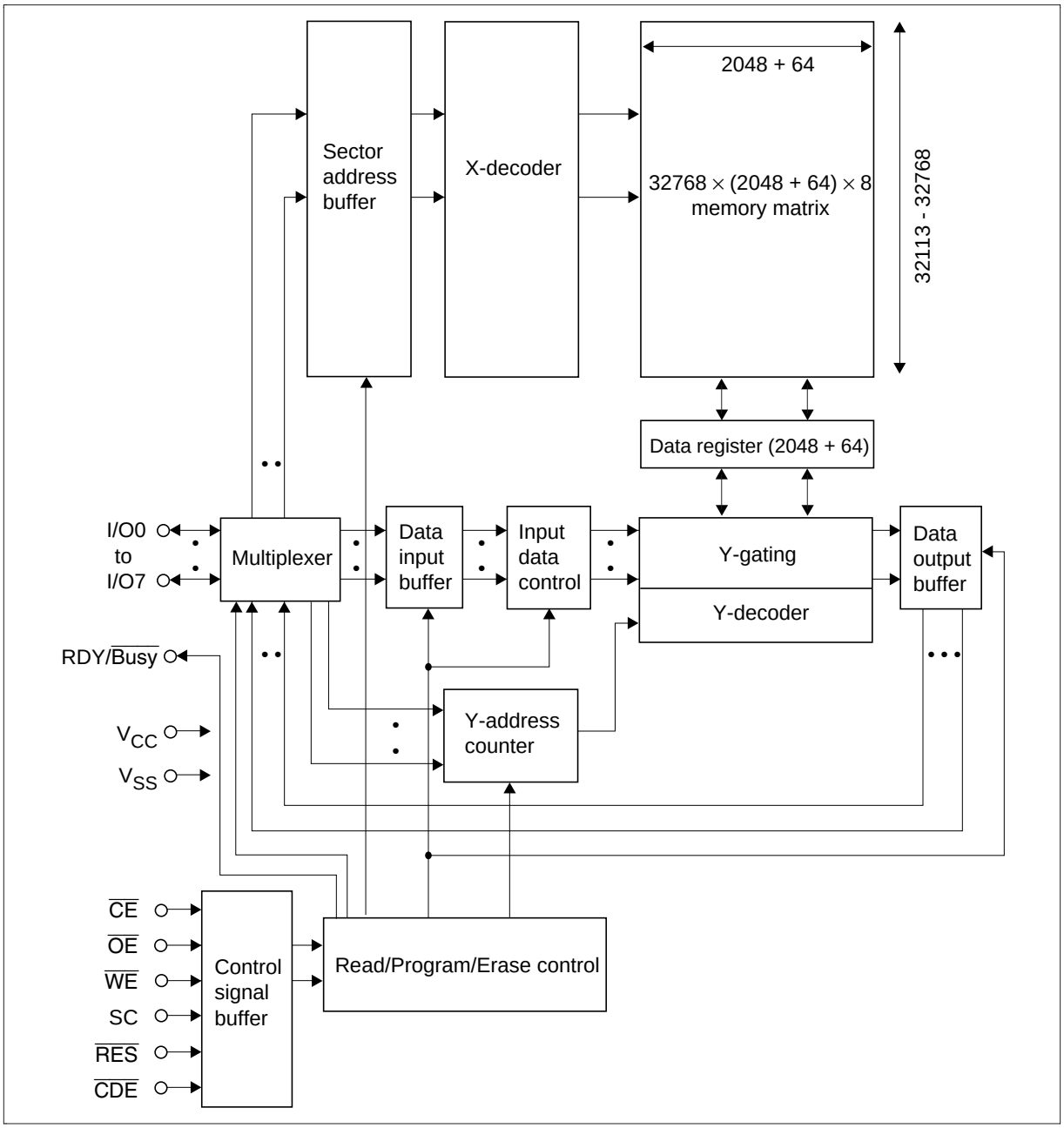

Memory Map and Address

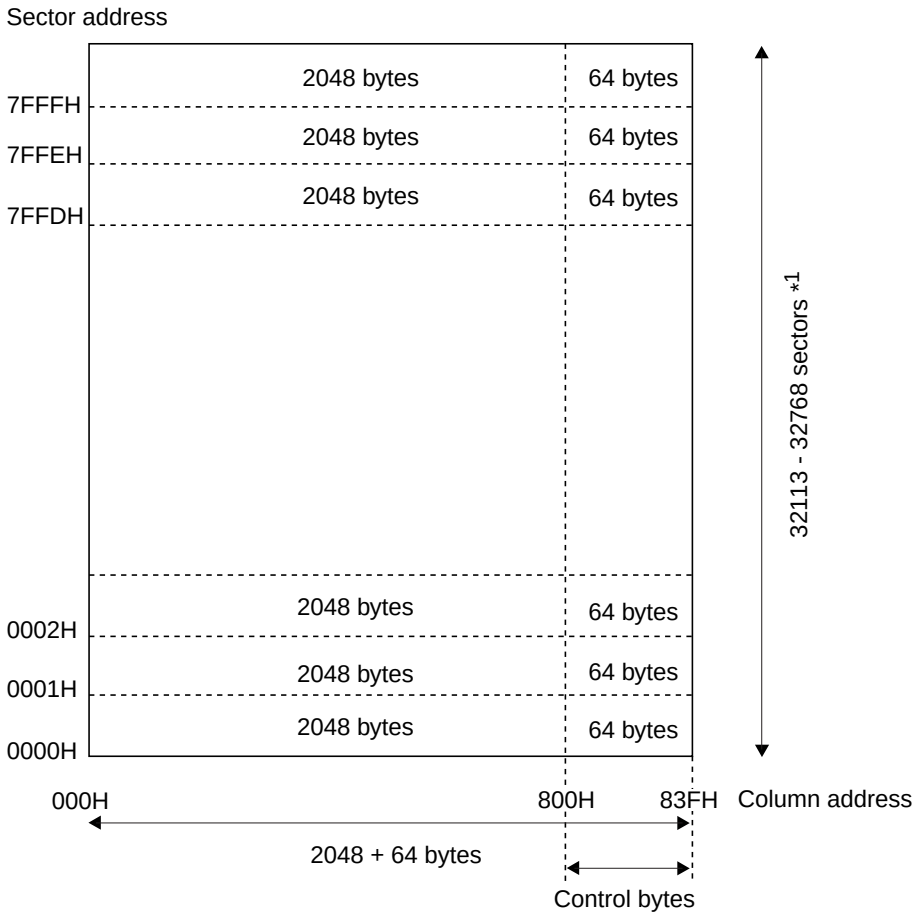

Address	Cycles	I/O0	I/O1	I/O2	I/O3	I/O4	I/O5	I/O6	I/O7
Sector address	SA (1): First cycle	A0	A1	A2	A3	A4	A5	A6	A7
	SA (2): Second cycle	A8	A9	A10	A11	A12	A13	A14	×*2
Column address	CA (1): First cycle	A0	A1	A2	A3	A4	A5	A6	A7
	CA (2): Second cycle	A8	A9	A10	A11	×	×	×	×

Notes: 1. Some failed sectors may exist in the device. The failed sectors can be recognized by reading the sector valid data written in a part of the column address 800 to 83F (The specific address is TBD.). The sector valid data must be read and kept outside of the sector before the sector erase. When the sector is programmed, the sector valid data should be written back to the sector.

2. An × means "Don't care". The pin level can be set to either V_{IL} or V_{IH}, referred to DC characteristics.

Pin Function

$\overline{CE}$: $\overline{CE}$ is used to select the device. The status returns to the standby at the rising edge of $\overline{CE}$ in the reading operation. However, the status does not return to the standby at the rising edge of $\overline{CE}$ in the busy state in programming and erase operation.

$\overline{OE}$: Memory data and status register data can be read, when $\overline{OE}$ is V_{IL}.

$\overline{WE}$: Commands and address are latched at the rising edge of $\overline{WE}$.

SC: Programming and reading data is latched at the rising edge of SC.

$\overline{RES}$: $\overline{RES}$ pin must be kept at the V_{ILR} (V_{SS} ± 0.2 V) level when V_{CC} is turned on and off. In this way, data in the memory is protected against unintentional erase and programming. $\overline{RES}$ must be kept at the V_{IHR} (V_{CC} ± 0.2 V) level during any operations such as programming, erase and read.

$\overline{CDE}$: Commands and data are latched when $\overline{CDE}$ is V_{IL} and address is latched when $\overline{CDE}$ is V_{IH}.

RDY/$\overline{Busy}$: The RDY/$\overline{Busy}$ indicates the program/erase status of the flash memory. The RDY/$\overline{Busy}$ signal is initially at a high impedance state. It turns to a V_{OL} level after the (40H) command in programming operation or the (B0H) command in erase operation. After the erase or programming operation finishes, the RDY/$\overline{Busy}$ signal turns back to the high impedance state.

I/O0 to I/O7: The I/O pins are used to input data, address and command, and are used to output memory data and status register data.

Mode Selection

Mode	$\overline{CE}$	$\overline{OE}$	$\overline{WE}$	SC	$\overline{RES}$	$\overline{CDE}$	RDY/$\overline{Busy}$*3	I/O0 to I/O7
Deep standby	×*4	×	×	×	V_{ILR}	×	V_{OH}	High-Z
Standby	V_{IH}	×	×	×	V_{IHR}	×	V_{OH}	High-Z
Output disable	V_{IL}	V_{IH}	V_{IH}	×	V_{IHR}	×	V_{OH}	High-Z
Status register read*1	V_{IL}	V_{IL}	V_{IH}	×	V_{IHR}	×	V_{OH}	Status register outputs
Command write*2	V_{IL}	V_{IH}	V_{IL}	V_{IL}	V_{IHR}	V_{IL}	V_{OH}	Din

Notes: 1. Default mode after the power on is the status register read mode (refer to status transition). From I/O0 to I/O7 pins output the status, when $\overline{CE}$ = V_{IL} and $\overline{OE}$ = V_{IL} (conventional read operation condition).

2. Refer to the command definition. Data can be read, programmed and erased after commands are written in this mode.

3. The RDY/$\overline{Busy}$ bus should be pulled up to V_{CC} to maintain the V_{OH} level while the RDY/$\overline{Busy}$ pin outputs a high impedance.

4. An × means “Don’t care”. The pin level can be set to either V_{IL} or V_{IH} referred to DC characteristics.

Command Definition*[1, 2]

Command			Bus cycles	First bus cycle Operation mode*[3]	First bus cycle Data in	Second bus cycle Operation mode	Second bus cycle Data in	Second bus cycle Data out
Read	Serial read (1)	(Without CA)	3	Write	00H	Write	SA (1)*[4]	
		(With CA)	3 + 2h*[6]	Write	00H	Write	SA (1)*[4]	
	Serial read (2)		3	Write	F0H	Write	SA (1)*[4]	
	Read identifier codes		1	Write	90H	Read		ID*[8, 9]
	Data recovery read		1	Write	01H	Read		Recovery data
Auto erase	Single sector		4	Write	20H	Write	SA (1)*[4]	
Auto program	Program (1)	(Without CA*[7])	4	Write	10H	Write	SA (1)*[4]	
		(With CA*[7])	4 + 2h*[6]	Write	10H	Write	SA (1)*[4]	
	Program (2)*[10]		4	Write	1FH	Write	SA (1)*[4]	
	Program (3) (Control bytes)*[7]		4	Write	0FH	Write	SA (1)*[4]	
	Program (4)	(WithoutCA*[7])	4	Write	11H	Write	SA (1)*[4]	
		(With CA*[7])	4 + 2h*[6]	Write	11H	Write	SA (1)*[4]	
Reset			1	Write	FFH			
Clear status register			1	Write	50H			
Data recovery write			4	Write	12H	Write	SA (1)*[4]	

Command			Bus cycles	Third bus cycle Operation mode	Third bus cycle Data in	Fourth bus cycle Operation mode	Fourth bus cycle Data in
Read	Serial read (1)	(Without CA)	3	Write	SA (2)*4		
		(With CA)	3 + 2h*6	Write	SA (2)*4	Write	CA (1)*5
	Serial read (2)		3	Write	SA (2)*4		
	Read identifier codes		1				
	Data recovery read		1				
Auto erase	Single sector		4	Write	SA (2)*4	Write	B0H*11
Auto program	Program (1)	(Without CA*7)	4	Write	SA (2)*4	Write	40H*11, 12
		(With CA*7)	4 + 2h*6	Write	SA (2)*4	Write	CA (1)
	Program (2)*10		4	Write	SA (2)*4	Write	40H*11, 12
	Program (3)	(Control bytes)*7	4	Write	SA (2)*4	Write	40H*11, 12
	Program (4)	(WithoutCA*7)	4	Write	SA (2)*4	Write	40H*11, 12
		(With CA*7)	4 + 2h*6	Write	SA (2)*4	Write	CA (1)
Reset			1				
Clear status register			1				
Data recovery write			4	Write	SA (2)*4	Write	40H*11, 12

Command			Bus cycles	Fifth bus cycle Operation mode	Fifth bus cycle Data in	Sixth bus cycle Operation mode	Sixth bus cycle Data in
Read	Serial read (1)	(Without CA)	3				
		(With CA)	3 + 2h*6	Write	CA (2)*5		
	Serial read (2)		3				
	Read identifier codes		1				
	Data recovery read		1				
Auto erase	Single sector		4				
Auto program	Program (1)	(Without CA*7)	4				
		(With CA*7)	4 + 2h*6	Write	CA (2)*5	Write	40H*11, 12
	Program (2)*10		4				
	Program (3)	(Control bytes)*7	4				
	Program (4)	(WithoutCA*7)	4				
		(With CA*7)	4 + 2h*6	Write	CA (2)	Write	40H*11, 12
Reset			1				
Clear status register			1				
Data recovery write			4				

Notes:
1. Commands and sector address are latched at rising edge of $\overline{WE}$ pulses. Program data is latched at rising edge of SC pulses.
2. The chip is in the read status register mode when $\overline{RES}$ is set to V_{IHR} first time after the power up.
3. Refer to the command read and write mode in mode selection.
4. SA (1) = Sector address (A0 to A7), SA (2) = Sector address (A8 to A14).
5. CA (1) = Column address (A0 to A7), CA (2) = Column address (A8 to A11).
   ($0 \leq$ A11 to A0 $\leq$ 83FH)
6. The variable h is the input number of times of set of CA (1) and CA (2) ($1 \leq h \leq 2048 + 64$).
   Set of CA (1) and CA (2) can be input without limitation.
7. By using program (1) and (3), data can additionally be programmed maximum 15 times for each sector before erase.
8. ID = Identifier code; Manufacturer code (07H), Device code (9DH).
9. The manufacturer identifier code is output when $\overline{CDE}$ is low and the device identifier code is output when $\overline{CDE}$ is high.
10. Before program (2) operations, data in the programmed sector must be erased.
11. No commands can be written during auto program and erase (when the RDY/$\overline{Busy}$ pin outputs a V_{OL}).
12. The fourth or sixth cycle of the auto program comes after the program data input is complete.

Mode Description

Read

Serial Read (1): Memory data D0 to D2111 in the sector of address SA is sequentially read. Output data is not valid after the number of the SC pulse exceeds 2112. When CA is input, memory data D (m) to D (m + j) in the sector of address SA is sequentially read. Then output data is not valid after the number of the SC pulse exceeds (2112 to m). The mode turns back to the standby mode at any time when $\overline{CE}$ is V_{IH}.

Serial Read (2): Memory data D2048 to D2111 in the sector of address SA is sequentially read. Output data is not valid after the number of the SC pulse exceeds 64. The mode turns back to the standby mode at any time when $\overline{CE}$ is V_{IH}.

Automatic Erase

Single Sector Erase: Memory data D0 to D2111 in the sector of address SA is erased automatically by internal control circuits. After the sector erase starts, the erasure completion can be checked through the RDY/$\overline{Busy}$ signal and status data polling. All the bits in the sector are "1" after the erase. The sector valid data stored in a part of memory data D2048 to D2111 must be read and kept outside of the sector before the sector erase.

Automatic Program

Program (1): Program data PD0 to PD2111 is programmed into the sector of address SA automatically by internal control circuits. When CA is input, program data PD (m) to PD (m + j) is programmed from CA into the sector of address SA automatically by internal control circuits. By using program (1), data can additionally be programed 15 times for each sector before the following erase. When the column is programmed, the data of the column must be [FF]. After the programming starts, the program completion can be checked through the RDY/$\overline{Busy}$ signal and status data polling. Programmed bits in the sector turn from "1" to "0" when they are programmed. The sector valid data should be included in the program data PD2048 to PD2111.

Program (2): Program data PD0 to PD2111 is programmed into the sector of address SA automatically by internal control circuits. After the programming starts, the program completion can be checked through the RDY/$\overline{Busy}$ signal and status data polling. Programmed bits in the sector turn from "1" to "0" when they are programmed. The sector must be erased before programming. The sector valid data should be included in the program data PD2048 to PD2111.

Program (3): Program data PD2048 to PD2111 is programmed into the sector of address SA automatically by internal control circuits. By using program (3), data can additionally be programed 15 times for each sector befor the following erase. When the column is programmed, the data of the column must be [FF]. After the programming starts, the program completion can be checked through the RDY/$\overline{Busy}$ signal and status data polling. Programmed bits in the sector turn from "1" to "0" when they are programmed.

Program (4): Program data PD0 to PD2111 is programmed into the sector of address SA automatically by internal control circuits. When CA is input, program data PD (m) to PD (m + j) is programmed from CA into the sector of address SA automatically by internal control circuits. By using program (4), data can be rewritten for each sector before the following erase. So the column data before programming operation are either "1" or "0". In this mode, E/W number of times must be counted whenever program (4) execute. After the programming starts, the program completion can be checked through the RDY/$\overline{\text{Busy}}$ signal and status data polling. The sector valid data should be included in the program data PD2048 to PD2111.

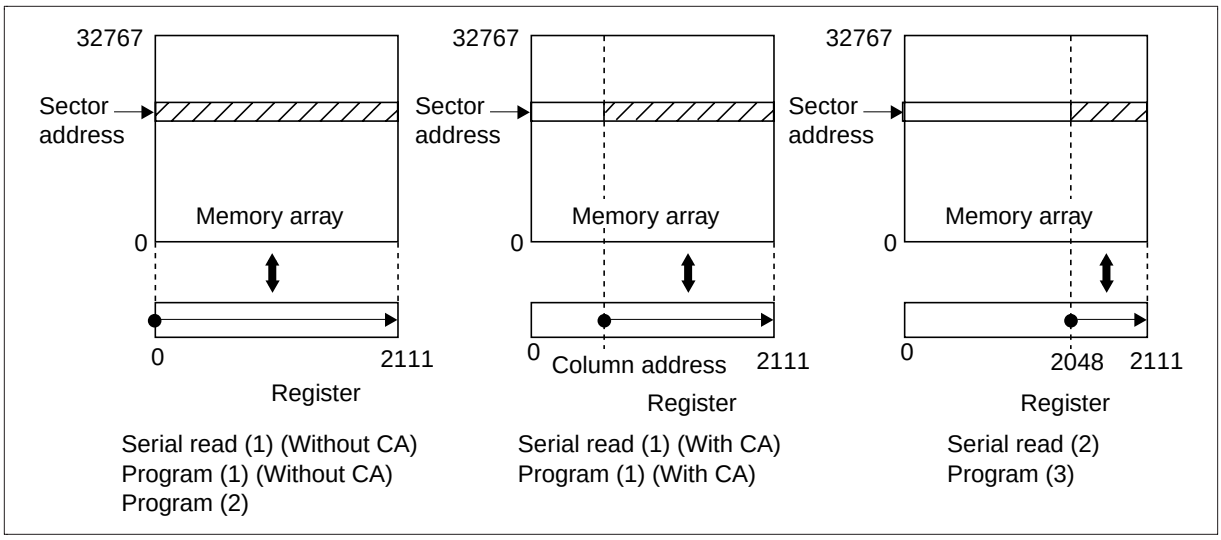

Status Register Read

The status returns to the status register read mode from standby mode, when $\overline{\text{CE}}$ and $\overline{\text{OE}}$ is V_{IL}. In the status register read mode, I/O pins output the same operation status as in the status data polling defined in the function description.

Identifier Read

The manufacturer and device identifier code can be read in the identifier read mode. The manufacturer and device identifier code is selected with $\overline{\text{CDE}}$ V_{IL} and V_{IH}, respectively.

Data Recovery Read

When the programming was an error, the program data can be read by using data recovery read. When an additional programming was an error, the data compounded of the program data and the origin data in the sector address SA can be read. Output data are not valid after the number of SA pulse exeeds 2112. The mode turns back to the standby mode at any time when $\overline{CE}$ is V_{IH}. The read data are invalid when addresses are latched at a rising edge of $\overline{WE}$ pulse after the data recovery read command is written.

Data Recovery Write

When the programming into a sector of address SA was an error, the program data can be rewritten automatically by internal control circuit into the other selected sector of address SA'. Since the data recovery write mode is internally Program (4) mode, rewritten sector of address SA' needs no sector erase before rewrite. After the data recovery write mode starts, the program completion can be checked through the RDY/$\overline{Busy}$ signal and the status data polling.

Command/Address/Data Input Sequence

Serial Read (1) (With CA before SC)

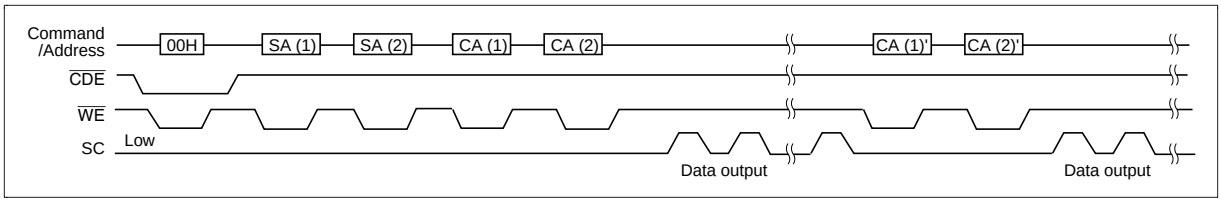

Serial Read (1) (With CA after SC)

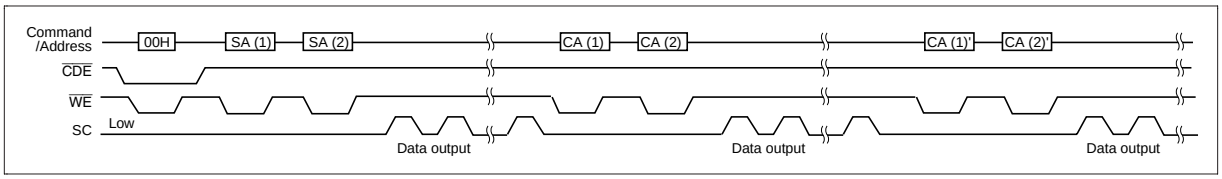

Serial Read (1) (Without CA), (2)

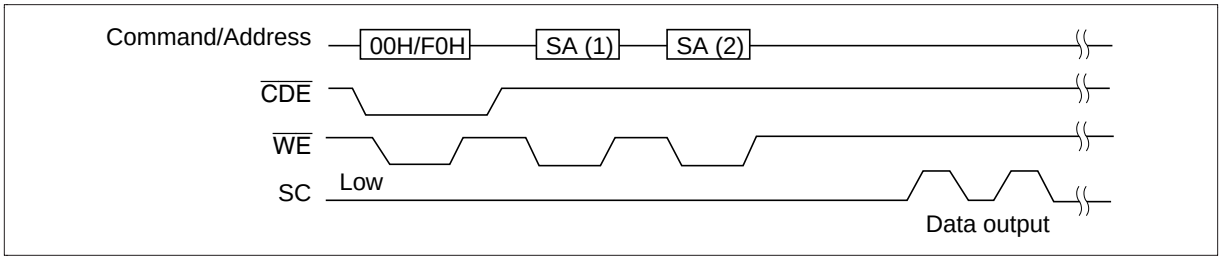

Single Sector Erase

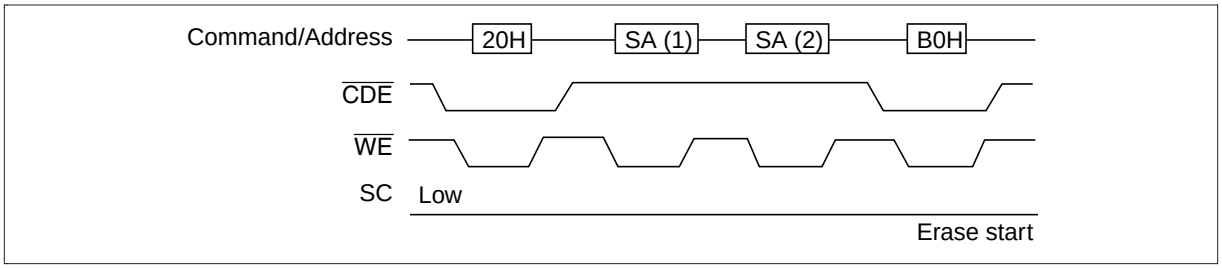

Program (1), (4) (With CA before SC)

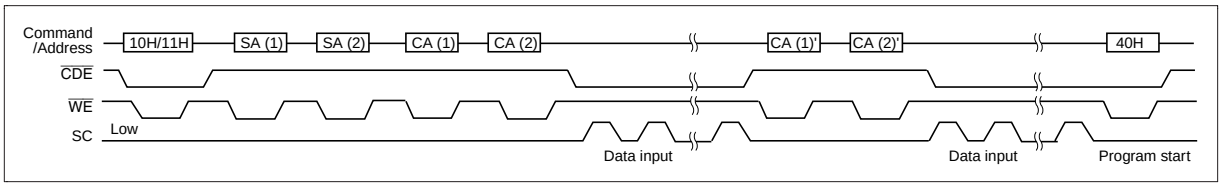

Program (1), (4) (With CA after SC)

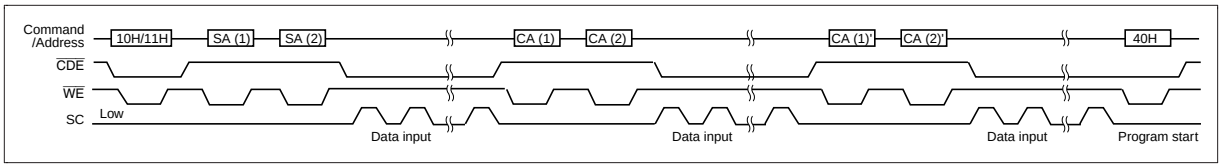

Program (1), (4) (Without CA)

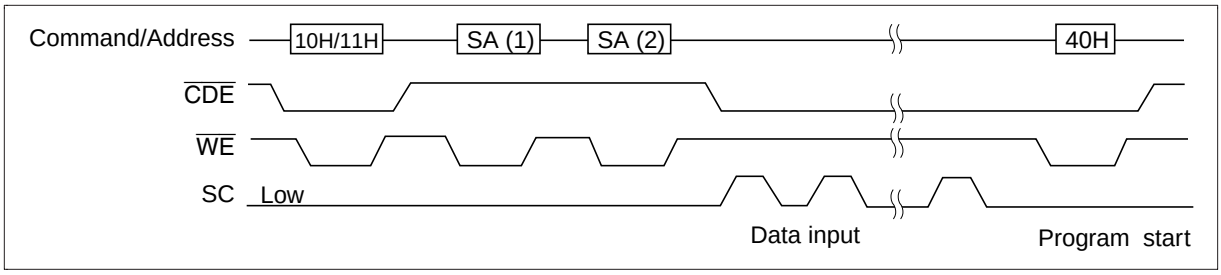

Program (2)

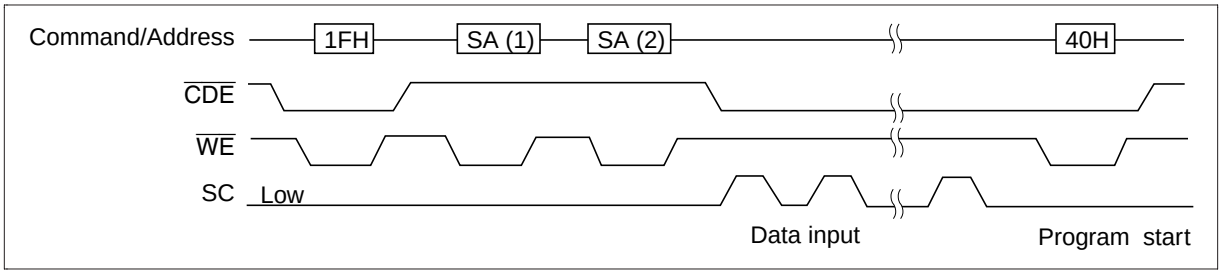

Program (3)

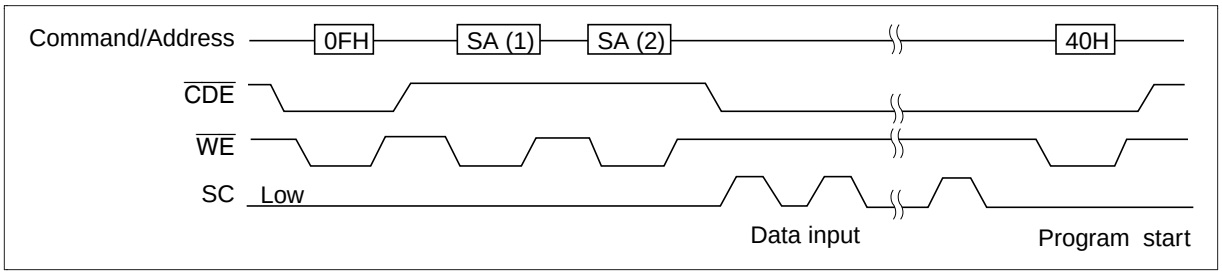

ID Read Mode

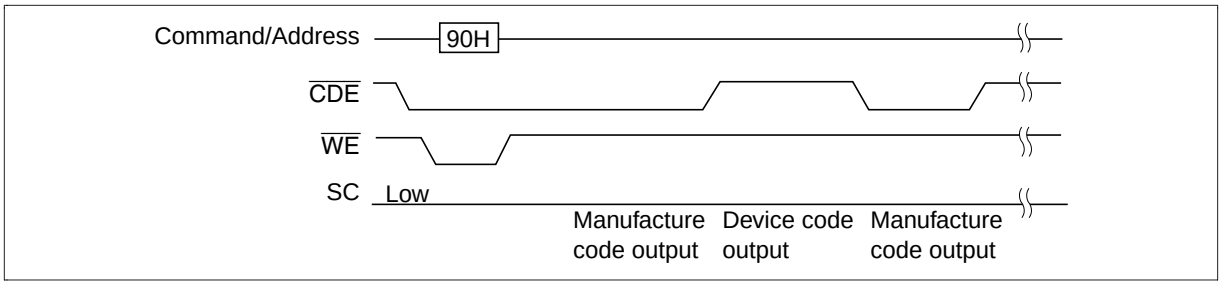

Data Recovery Read Mode

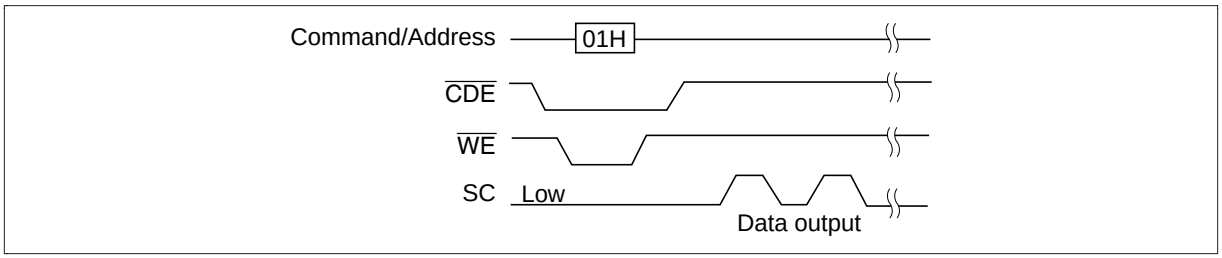

Data Recovery Write Mode

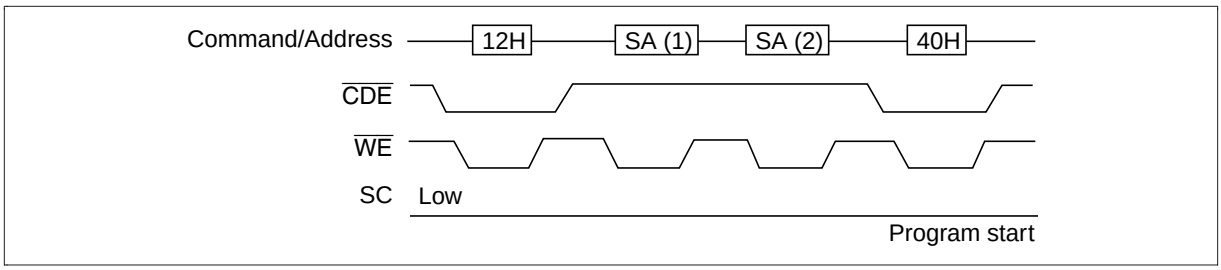

Status Transition

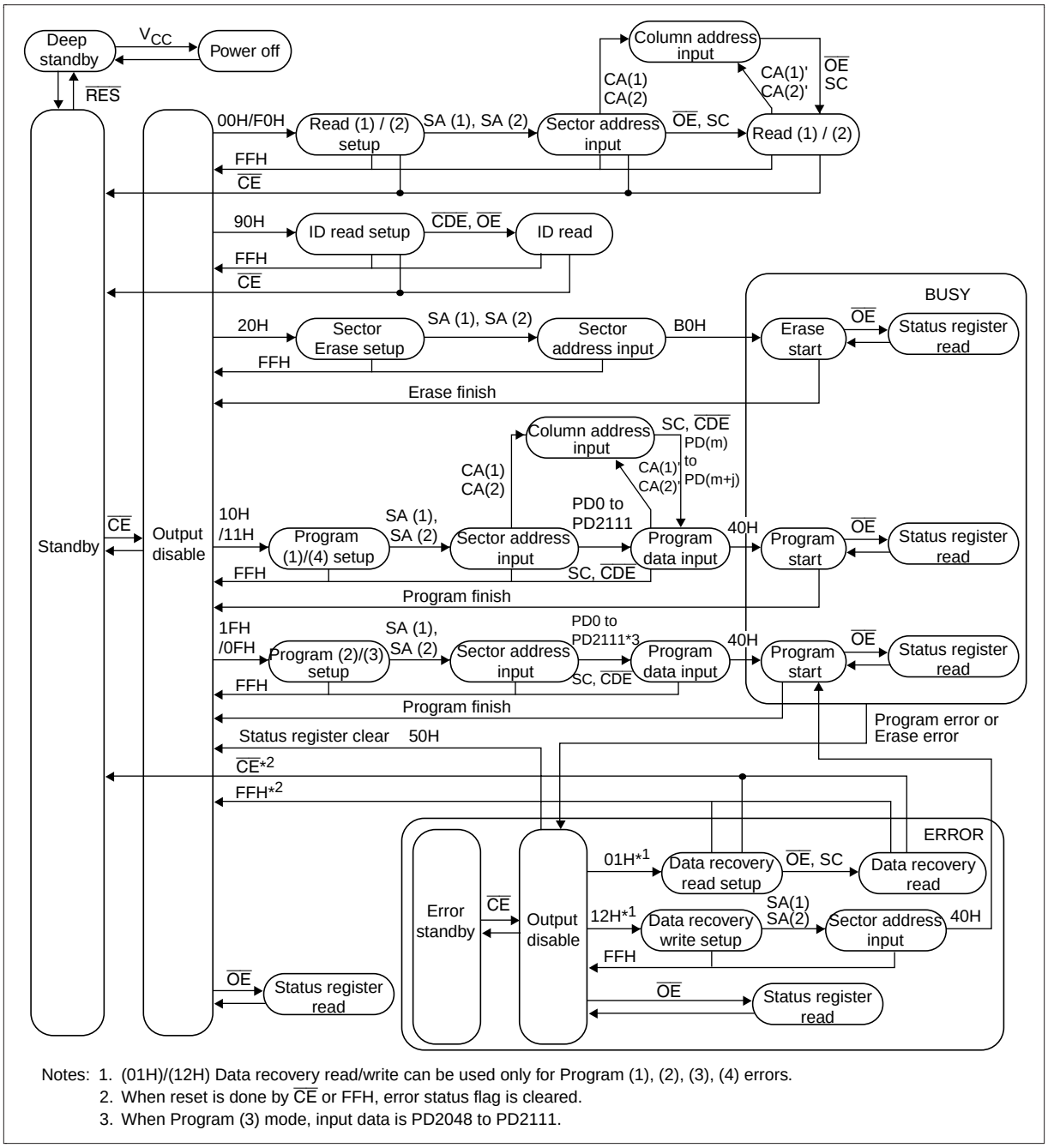

Notes: 1. (01H)/(12H) Data recovery read/write can be used only for Program (1), (2), (3), (4) errors.
2. When reset is done by $\overline{CE}$ or FFH, error status flag is cleared.
3. When Program (3) mode, input data is PD2048 to PD2111.

Absolute Maximum Ratings

Parameter	Symbol	Value	Unit	Notes
V_{CC} voltage	V_{CC}	–0.6 to +4.6	V	1
V_{SS} voltage	V_{SS}	0	V	
All input and output voltages	Vin, Vout	–0.6 to +4.6	V	1, 2
Operating temperature range	Topr	0 to +70	˚C	
Storage temperature range	Tstg	–65 to +125	˚C	3
Storage temperature under bias	Tbias	–10 to +80	˚C	

Notes: 1. Relative to V_{SS}.
2. Vin, Vout = –2.0 V for pulse width ≤ 20 ns.
3. Device storage temperature range before programming.

Capacitance (Ta = 25˚C, f = 1 MHz)

Parameter	Symbol	Min	Typ	Max	Unit	Test conditions
Input capacitance	Cin	—	—	6	pF	Vin = 0 V
Output capacitance	Cout	—	—	12	pF	Vout = 0 V

DC Characteristics (V_{CC} = 2.7 V to 3.6 V, Ta = 0 to +70˚C)

Parameter	Symbol	Min	Typ	Max	Unit	Test conditions
Input leakage current	I_{LI}	—	—	2	µA	Vin = V_{SS} to V_{CC}
Output leakage current	I_{LO}	—	—	2	µA	Vout = V_{SS} to V_{CC}
Standby V_{CC} current	I_{SB1}	—	0.3	1	mA	$\overline{CE}$ = V_{IH}
	I_{SB2}	—	30	50	µA	$\overline{CE}$ = V_{CC} ± 0.2 V, $\overline{RES}$ = V_{CC} ± 0.2 V
Deep standby V_{CC} current	I_{SB3}	—	1	20	µA	$\overline{RES}$ = V_{SS} ± 0.2 V
Operating V_{CC} current	I_{CC1}	—	2	20	mA	Iout = 0 mA, f = 0.2 MHz
	I_{CC2}	—	10	20	mA	Iout = 0 mA, f = 20 MHz
Operating V_{CC} current (Program)	I_{CC3}	—	20	40	mA	In programming
Operating V_{CC} current (Erase)	I_{CC4}	—	20	40	mA	In erase
Input voltage	V_{IL}	–0.3*[1, 2]	—	0.8	V	
	V_{IH}	2.0	—	V_{CC} + 0.3*[3]	V	
Input voltage ($\overline{RES}$ pin)	V_{ILR}	–0.2	—	0.2	V	
	V_{IHR}	V_{CC} – 0.2	—	V_{CC} + 0.2	V	
Output voltage	V_{OL}	—	—	0.4	V	I_{OL} = 2 mA
	V_{OH}	2.4	—	—	V	I_{OH} = –2 mA

Notes: 1. V_{IL} min = –1.0 V for pulse width ≤ 50 ns in the read operation. V_{IL} min = –2.0 V for pulse width ≤ 20 ns in the read operation.
2. V_{IL} min = –0.6 V for pulse width ≤ 20 ns in the erase/data programming operation.
3. V_{IH} max = V_{CC} + 1.5 V for pulse width ≤ 20 ns. If V_{IH} is over the specified maximum value, the operations are not guaranteed.

AC Characteristics (V_{CC} = 2.7 V to 3.6 V, Ta = 0 to +70˚C)

Test Conditions

- Input pulse levels: 0.4 V/2.4 V
- Input pulse levels for $\overline{RES}$: 0.2 V/V_{CC} – 0.2 V
- Input rise and fall time: ≤ 5 ns
- Output load: 1 TTL gate + 100 pF (Including scope and jig.)
- Reference levels for measuring timing: 0.8 V, 1.8 V

Power on and off, Serial Read Mode

Parameter	Symbol	Min	Typ	Max	Unit	Test conditions	Notes
Write cycle time	t_{CWC}	120	—	—	ns		
Serial clock cycle time	t_{SCC}	50	—	—	ns		
$\overline{CE}$ setup time	t_{CES}	0	—	—	ns		
$\overline{CE}$ hold time	t_{CEH}	0	—	—	ns		
Write pulse time	t_{WP}	60	—	—	ns	$\overline{CE} = V_{IL}$, $\overline{OE} = V_{IH}$	
Write pulse high time	t_{WPH}	40	—	—	ns		
Address setup time	t_{AS}	50	—	—	ns		
Address hold time	t_{AH}	10	—	—	ns		
Data setup time	t_{DS}	50	—	—	ns		
Data hold time	t_{DH}	10	—	—	ns		
SC to output delay	t_{SAC}	—	—	50	ns	$\overline{CE} = \overline{OE} = V_{IL}$, $\overline{WE} = V_{IH}$	
$\overline{OE}$ setup time for SC	t_{OES}	0	—	—	ns		
$\overline{OE}$ low to output low-Z	t_{OEL}	0	—	40	ns		
$\overline{OE}$ setup time before read	t_{OER}	100	—	—	ns		
$\overline{OE}$ setup time before command write	t_{OEWS}	0	—	—	ns		
SC to output hold	t_{SH}	15	—	—	ns	$\overline{CE} = \overline{OE} = V_{IL}$, $\overline{WE} = V_{IH}$	
$\overline{OE}$ high to output float	t_{DF}	—	—	40	ns	$\overline{CE} = V_{IL}$, $\overline{WE} = V_{IH}$	1
$\overline{WE}$ to SC delay time	t_{WSD}	50	—	—	µs		2
$\overline{RES}$ to $\overline{CE}$ setup time	t_{RP}	0.3	—	—	ms		
SC to $\overline{OE}$ hold time	t_{SOH}	50	—	—	ns		
SC pulse width	t_{SP}	20	—	—	ns		
SC pulse low time	t_{SPL}	20	—	—	ns		
SC setup time for $\overline{CE}$	t_{SCS}	0	—	—	ns		
$\overline{CDE}$ setup time for $\overline{WE}$	t_{CDS}	0	—	—	ns		
$\overline{CDE}$ hold time for $\overline{WE}$	t_{CDH}	20	—	—	ns		
V_{CC} setup time for $\overline{RES}$	t_{VRS}	1	—	—	µs	$\overline{CE} = V_{IH}$	
$\overline{RES}$ to V_{CC} hold time	t_{VRH}	1	—	—	µs	$\overline{CE} = V_{IH}$	
$\overline{CE}$ setup time for $\overline{RES}$	t_{CESR}	1	—	—	µs		
RDY/$\overline{Busy}$ undefined for V_{CC} off	t_{DFP}	0	—	—	ns		
$\overline{RES}$ high to device ready	t_{BSY}	—	—	0.3	ms		
$\overline{CE}$ pulse high time	t_{CPH}	200	—	—	ns		
$\overline{CE}$, $\overline{WE}$ setup time for $\overline{RES}$	t_{CWRS}	0	—	—	ns		
$\overline{RES}$ to $\overline{CE}$, $\overline{WE}$ hold time	t_{CWRH}	0	—	—	ns		

Parameter	Symbol	Min	Typ	Max	Unit	Test conditions	Notes
SC setup for $\overline{WE}$	t_{SW}	50	—	—	ns		
$\overline{CE}$ hold time for $\overline{OE}$	t_{COH}	0	—	—	ns		
SA (2) to CA (2) delay time	t_{SCD}	—	—	30	µs		
RDY/$\overline{Busy}$ setup for SC	t_{RS}	200	—	—	ns		
Time to device busy	t_{DB}	—	—	150	ns		
Busy time on read mode	t_{RBSY}	—	45	—	µs		

Notes: 1. t_{DF} is a time after which the I/O pins become open.

2. t_{WSD} (min) is specified as a reference point only for SC, if t_{WSD} is greater than the specified t_{WSD} (min) limit, then access time is controlled exclusively by t_{SAC}.

Program, Erase and Erase Verify

Parameter	Symbol	Min	Typ	Max	Unit	Test conditions	Note
Write cycle time	t_{CWC}	120	—	—	ns		
Serial clock cycle time	t_{SCC}	50	—	—	ns		
$\overline{CE}$ setup time	t_{CES}	0	—	—	ns		
$\overline{CE}$ hold time	t_{CEH}	0	—	—	ns		
Write pulse time	t_{WP}	60	—	—	ns		
Write pulse high time	t_{WPH}	40	—	—	ns		
Address setup time	t_{AS}	50	—	—	ns		
Address hold time	t_{AH}	10	—	—	ns		
Data setup time	t_{DS}	50	—	—	ns		
Data hold time	t_{DH}	10	—	—	ns		
$\overline{OE}$ setup time before command write	t_{OEWS}	0	—	—	ns		
$\overline{OE}$ setup time before status polling	t_{OEPS}	40	—	—	ns		
$\overline{OE}$ setup time before read	t_{OER}	100	—	—	ns		
Time to device busy	t_{DB}	—	—	150	ns		
Auto erase time	t_{ASE}	—	1.0	10.0	ms		
Auto program time Program(1), (3)	t_{ASP}	—	1.5	20.0	ms		
Program(2)	t_{ASP}	—	1.0	20.0	ms		
Program(4), Data recovery write	t_{ASP}	—	2.0	30.0	ms		
$\overline{WE}$ to SC delay time	t_{WSD}	50	—	—	µs		
$\overline{CE}$ pulse high time	t_{CPH}	200	—	—	ns		
SC pulse width	t_{SP}	20	—	—	ns		
SC pulse low time	t_{SPL}	20	—	—	ns		
Data setup time for SC	t_{SDS}	0	—	—	ns		
Data hold time for SC	t_{SDH}	30	—	—	ns	$\overline{CDE} = V_{IL}$	
SC setup for $\overline{WE}$	t_{SW}	50	—	—	ns		
SC setup for $\overline{CE}$	t_{SCS}	0	—	—	ns		
SC hold time for $\overline{WE}$	t_{SCHW}	20	—	—	ns		

Parameter	Symbol	Min	Typ	Max	Unit	Test conditions	Note
$\overline{CE}$ to output delay	t_{CE}	—	—	120	ns		
$\overline{OE}$ to output delay	t_{OE}	—	—	60	ns		
$\overline{OE}$ high to output float	t_{DF}	—	—	40	ns		1
$\overline{RES}$ to $\overline{CE}$ setup time	t_{RP}	0.3	—	—	ms		
$\overline{CDE}$ setup time for $\overline{WE}$	t_{CDS}	0	—	—	ns		
$\overline{CDE}$ hold time for $\overline{WE}$	t_{CDH}	20	—	—	ns		
$\overline{CDE}$ setup time for SC	t_{CDSS}	1.5	—	—	µs		
$\overline{CDE}$ hold time for SC	t_{CDSH}	30	—	—	ns		
Next cycle ready time	t_{RDY}	0	—	—	ns		
$\overline{CDE}$ to $\overline{OE}$ hold time	t_{CDOH}	50	—	—	ns		
$\overline{CDE}$ to output delay	t_{CDAC}	—	—	50	ns		
$\overline{CDE}$ to output invalid	t_{CDF}	—	—	100	ns		
$\overline{CE}$ hold time for $\overline{OE}$	t_{COH}	0	—	—	ns		
$\overline{OE}$ setup time for SC	t_{OES}	0	—	—	ns		
$\overline{OE}$ low to output low-Z	t_{OEL}	0	—	40	ns		
SC to output delay	t_{SAC}	—	—	50	ns		
SC to output hold	t_{SH}	15	—	—	ns		
RDY/$\overline{Busy}$ setup for SC	t_{RS}	200	—	—	ns		
Busy time on read mode	t_{RBSY}	—	45	—	µs		

Note: 1. t_{DF} is a time after which the I/O pins become open.

Timing Waveforms

Power on and off Sequence

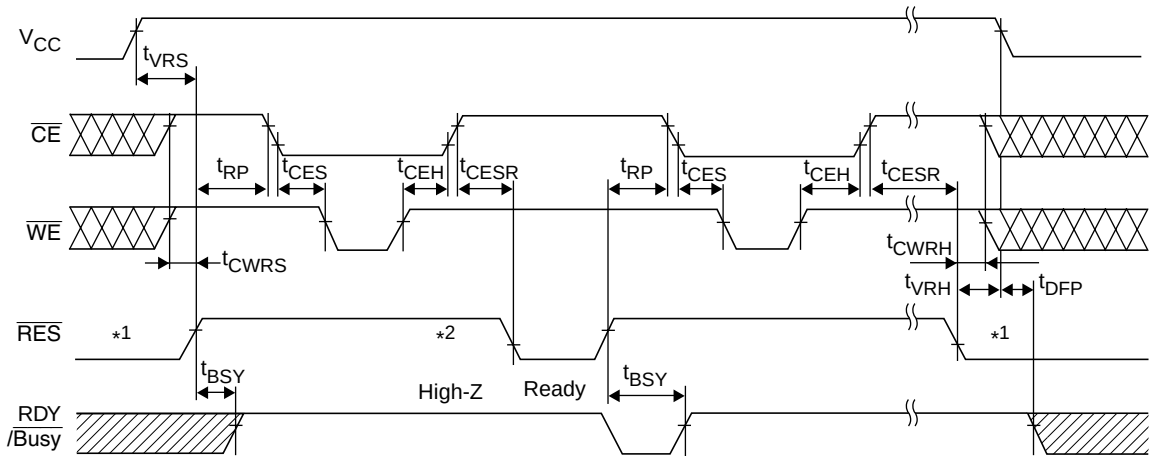

Notes: 1. $\overline{RES}$ must be kept at the V_{ILR} level referred to DC characteristics at the rising and falling edges of V_{CC} to guarantee data stored in the chip.
2. $\overline{RES}$ must be kept at the V_{IHR} level referred to DC characteristics while I/O7 outputs the V_{OL} level in the status data polling and RDY/$\overline{Busy}$ outputs the V_{OL} level.
3. ▨ : Undefined

Serial Read (1) (2) Timing Waveform

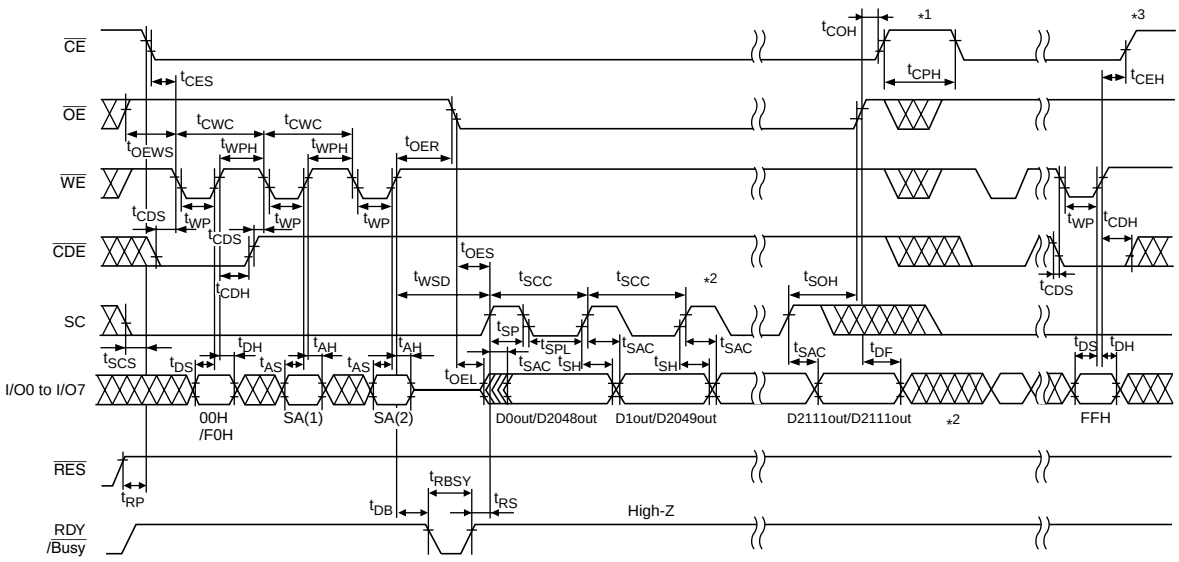

Notes: 1. The status returns to the standby at the rising edge of $\overline{CE}$.
2. Output data is not valid after the number of the SC pulse exceeds 2112 and 64 in the serial read mode (1)and (2), respectively.
3. After any commands are written, the status can return to the standby after the command FFH is input and $\overline{CE}$ turns to the V_{IH} level.

Serial Read (1) with CA before SC Timing Waveform

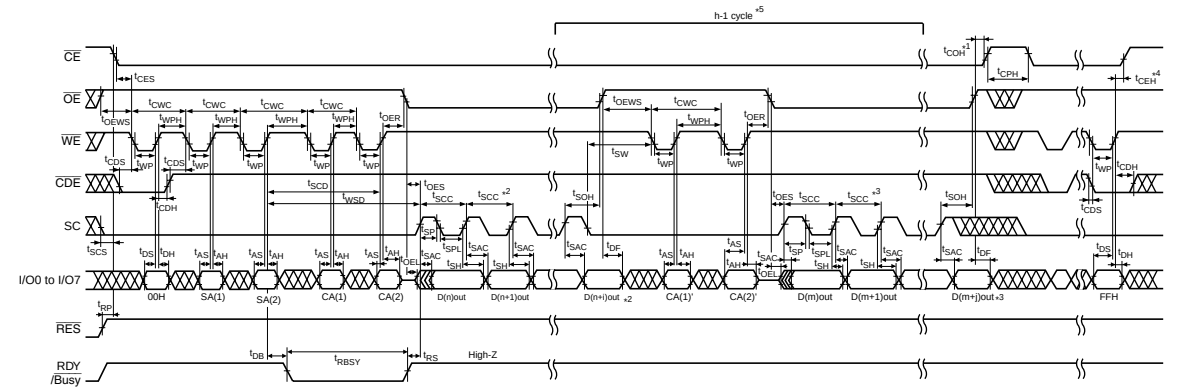

Notes: 1. The status returns to the Standby at the rising edge of $\overline{CE}$.
2. Output data is not valid after the number of the SC pulse exceeds (2112-n). ($i \leq 2111-n$, $0 \leq n \leq 2111$)
3. Output data is not valid after the number of the SC pulse exceeds (2112-m). ($j \leq 2111-m$, $0 \leq m \leq 2111$)
4. After any commands are written, the status can return to the standby after the command FFH is input and $\overline{CE}$ turns to the V_{IH} level.
5. This interval can be repeated (h-1) cycle. ($1 \leq h \leq 2048 + 64$)

Serial Read (1) with CA after SC Timing Waveform

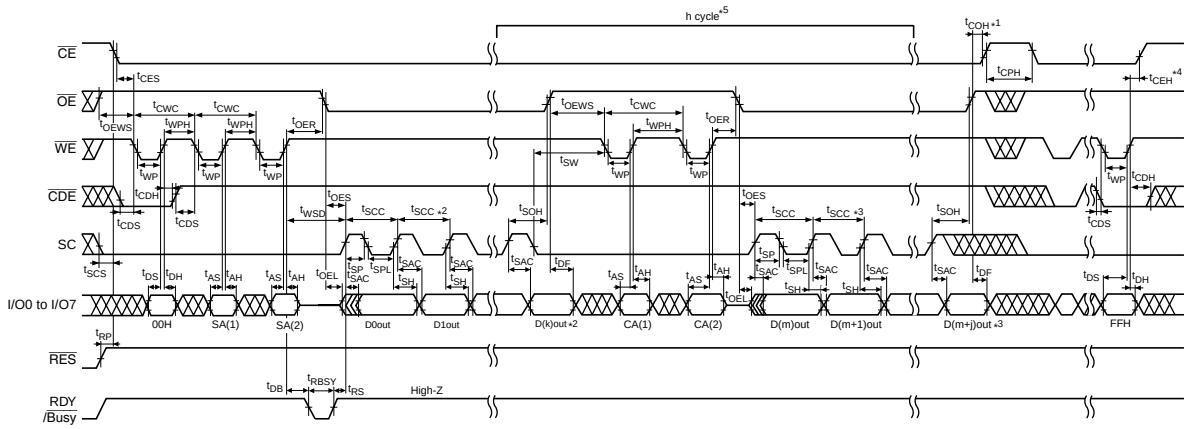

Notes: 1. The status returns to the Standby at the rising edge of $\overline{CE}$.
2. Output data is not valid after the number of the SC pulse exceeds 2112. ($0 \le k \le 2111$)
3. Output data is not valid after the number of the SC pulse exceeds (2112-m). ($j \le 2111-m$, $0 \le m \le 2111$)
4. After any commands are written, the status can return to the standby after the command FFH is input and $\overline{CE}$ turns to the V_{IH} level.
5. This interval can be repeated h cycle. ($1 \le h \le 2048 + 64$)

Erase and Status Data Polling Timing Waveform (Sector Erase)

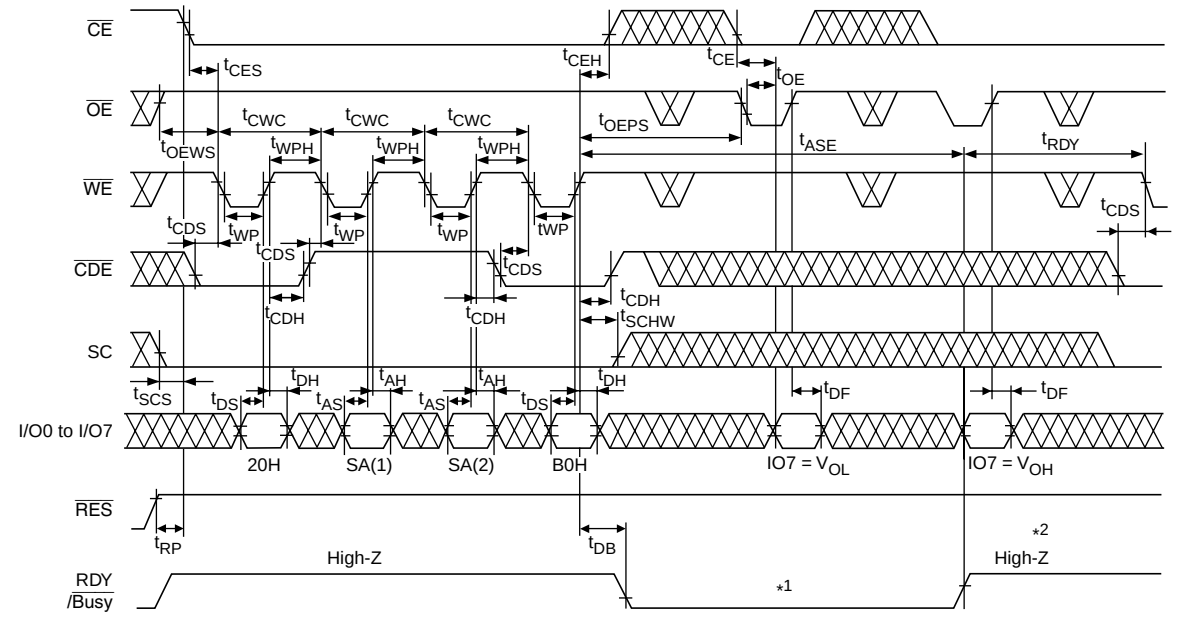

Notes: 1. Any commands,including reset command FFH, cannot be input while RDY/$\overline{Busy}$ outputs a V_{OL}.
2. The status returns to the standby status after RDY/$\overline{Busy}$ returns to High-Z.

Program (1) and Status Data Polling Timing Waveform

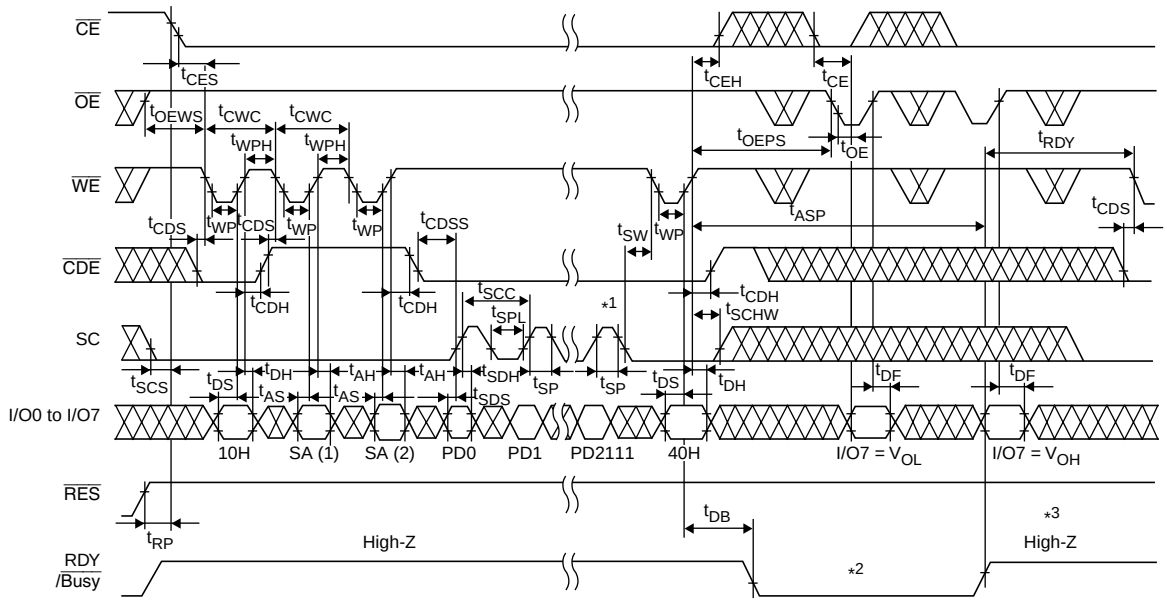

Notes: 1. The programming operation is not guranteed when the number of the SC pulse exceeds 2112.
2. Any commands, including reset command FFH, cannot be input while RDY/$\overline{\text{Busy}}$ is V_{OL}.
3. The status returns to the standby status after RDY/$\overline{\text{Busy}}$ returns to High-Z.
4. By using program (1), data can be programmed additionally for each sector before erase.

Program (1) with CA before SC and Status Data Polling Timing Waveform

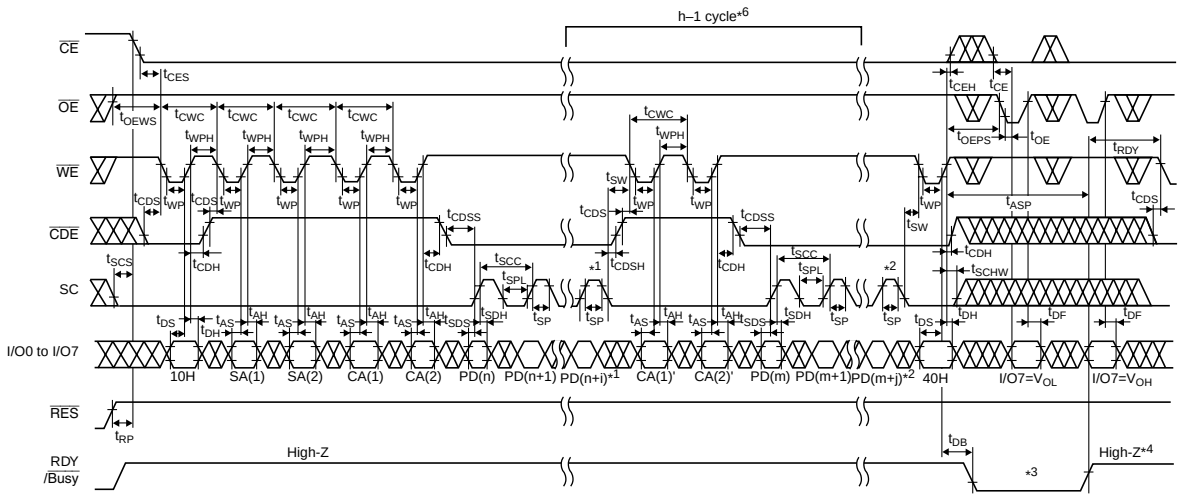

Notes: 1. The programming operation is not guaranteed when the number of the SC pulse exceeds (2112 – n).(i ≤ 2111 – n, 0 ≤ n ≤ 2111)
2. The programming operation is not guaranteed when the number of the SC pulse exceeds (2112 – m).(j ≤ 2111 – m, 0 ≤ m ≤ 2111)
3. Any commands, including reset command FFH, cannot be input while RDY/$\overline{\text{Busy}}$ is V_{OL}.
4. The status returns to the standby status after RDY/$\overline{\text{Busy}}$ returns to High-Z.
5. By using program (1), data can be programmed additionally for each sector before erase.
6. This interval can be repeated (h – 1) cycle.(1 ≤ h ≤ 2048 + 64)

Program (1) with CA after SC and Status Data Polling Timing Waveform

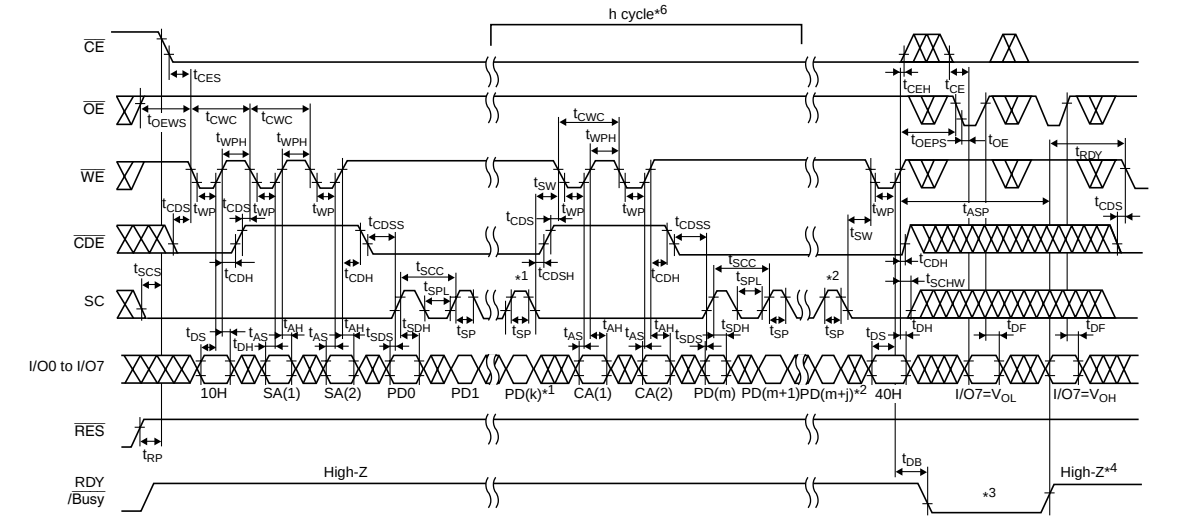

Notes: 1. The programming operation is not guaranteed when the number of the SC pulse exceeds 2112.(0 ≤ k ≤ 2111)
2. The programming operation is not guaranteed when the number of the SC pulse exceeds (2112 – m).(j ≤ 2111 – m, 0 ≤ m ≤ 2111)
3. Any commands, including reset command FFH, cannot be input while RDY/$\overline{\text{Busy}}$ is V_{OL}.
4. The status returns to the standby status after RDY/$\overline{\text{Busy}}$ returns to High-Z.
5. By using program (1), data can be programmed additionally for each sector before erase.
6. This interval can be repeated h cycle.(1 ≤ h ≤ 2048 + 64)

Program (2) and Status Data Polling Timing Waveform

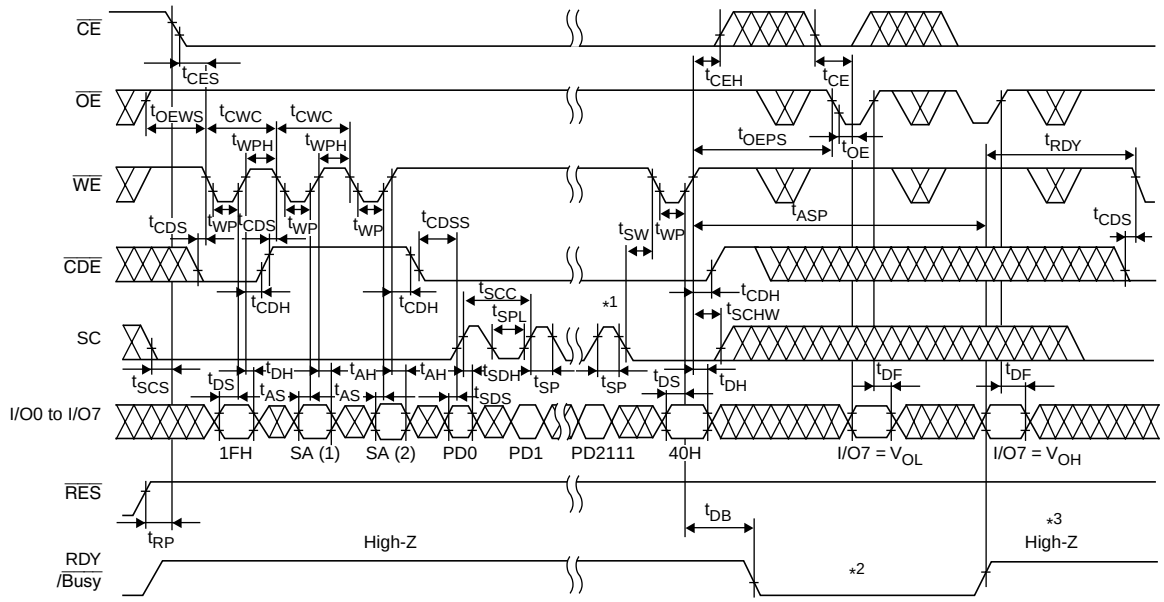

Notes: 1. The programming operation is not guranteed when the number of the SC pulse exceeds 2112.
2. Any commands, including reset command FFH, cannot be input while RDY/$\overline{\text{Busy}}$ is V_{OL}.
3. The status returns to the standby status after RDY/$\overline{\text{Busy}}$ returns to High-Z.
4. By using program (2), the programmed data of each sector must be erased before programming next data.

Program (3) and Status Data Polling Timing Waveform

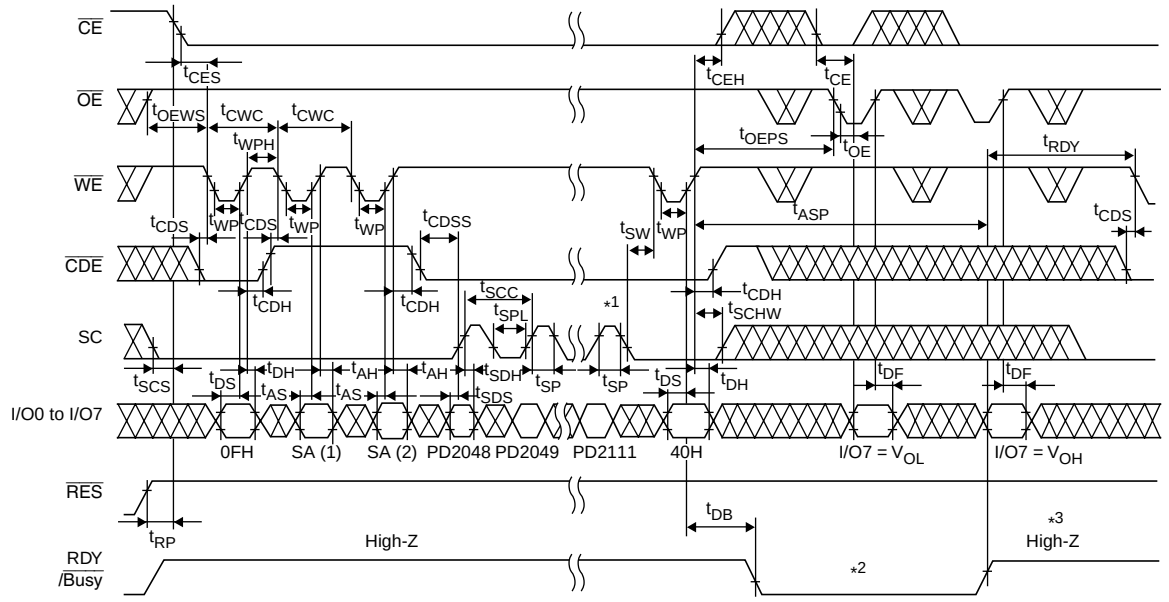

Notes: 1. The programming operation is not guranteed when the number of the SC pulse exceeds 64.
2. Any commands, including reset command FFH, cannot be input while RDY/$\overline{\text{Busy}}$ is V_{OL}.
3. The status returns to the standby status after RDY/$\overline{\text{Busy}}$ returns to High-Z.
4. By using program (3), the data can be programmed additionally for each sector before erase.

Program (4) and Status Data Polling Timing Waveform

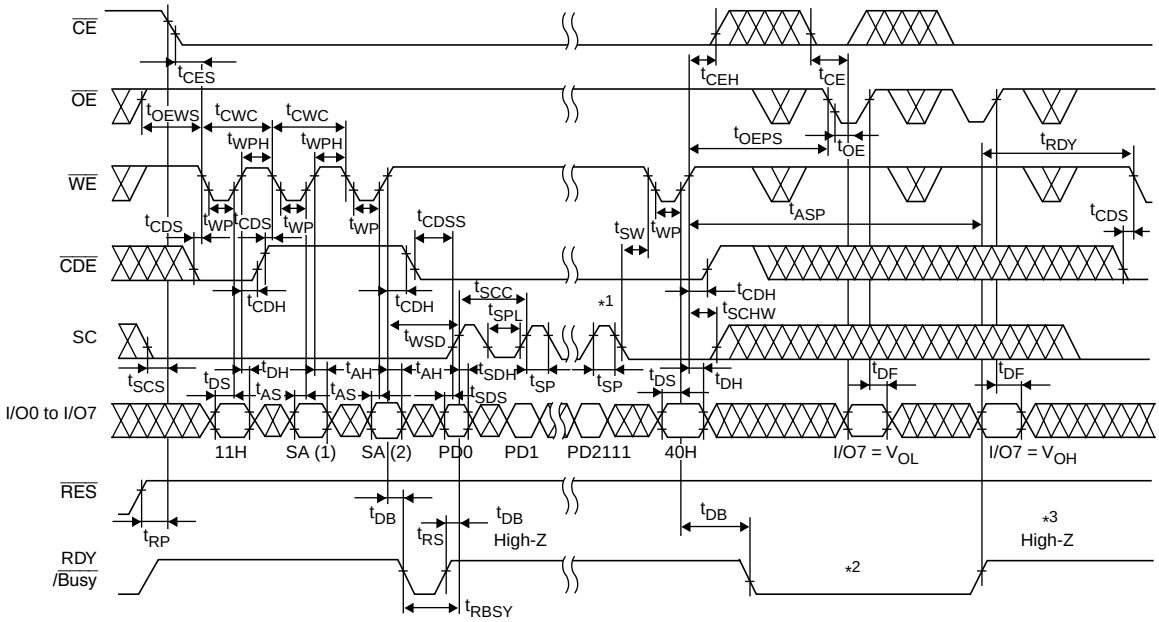

Notes: 1. The programming operation is not guranteed when the number of the SC pulse exceeds 2112.
2. Any commands, including reset command FFH, cannot be input while RDY/$\overline{\text{Busy}}$ is V_{OL}.
3. The status returns to the standby status after RDY/$\overline{\text{Busy}}$ returns to High-Z.
4. By using program (4), data can be rewritten for each sector.

Program (4) with CA before SC and Status Data Polling Timing Waveform

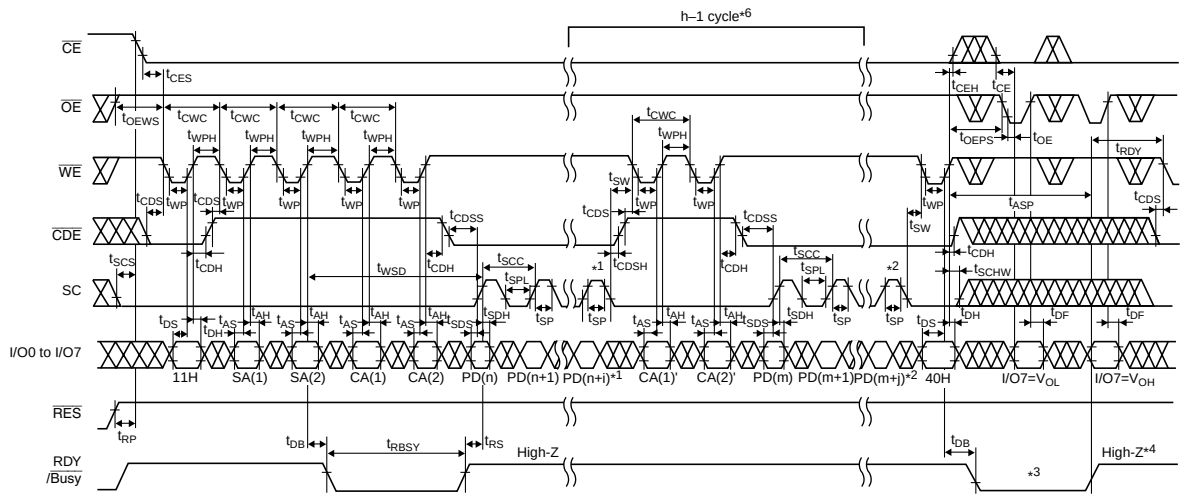

Notes: 1. The programming operation is not guaranteed when the number of the SC pulse exceeds (2112 – n).(i ≤ 2111 – n, 0 ≤ n ≤ 2111)
2. The programming operation is not guaranteed when the number of the SC pulse exceeds (2112 – m).(j ≤ 2111 – m, 0 ≤ m ≤ 2111)
3. Any commands, including reset command FFH, cannot be input while RDY/$\overline{\text{Busy}}$ is V_{OL}.
4. The status returns to the standby status after RDY/$\overline{\text{Busy}}$ returns to High-Z.
5. By using program (4), data can be rewritten for each sector.
6. This interval can be repeated (h – 1) cycle.(1 ≤ h ≤ 2048 + 64)

Program (4) with CA after SC and Status Data Polling Timing Waveform

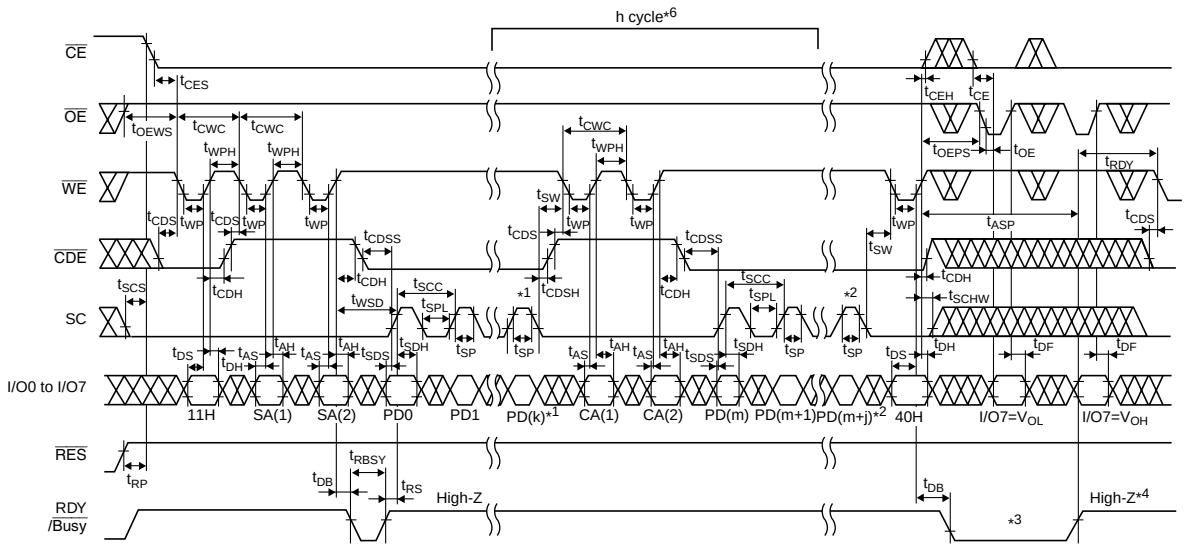

Notes: 1. The programming operation is not guaranteed when the number of the SC pulse exceeds 2112.(0 ≤ k ≤ 2111)
2. The programming operation is not guaranteed when the number of the SC pulse exceeds (2112 – m).(j ≤ 2111 – m, 0 ≤ m ≤ 2111)
3. Any commands, including reset command FFH, cannot be input while RDY/$\overline{\text{Busy}}$ is V_{OL}.
4. The status returns to the standby status after RDY/$\overline{\text{Busy}}$ returns to High-Z.
5. By using program (4), data can be rewritten for each sector.
6. This interval can be repeated h cycle.(1 ≤ h ≤ 2048 + 64)

ID and Status Register Read Timing Waveform

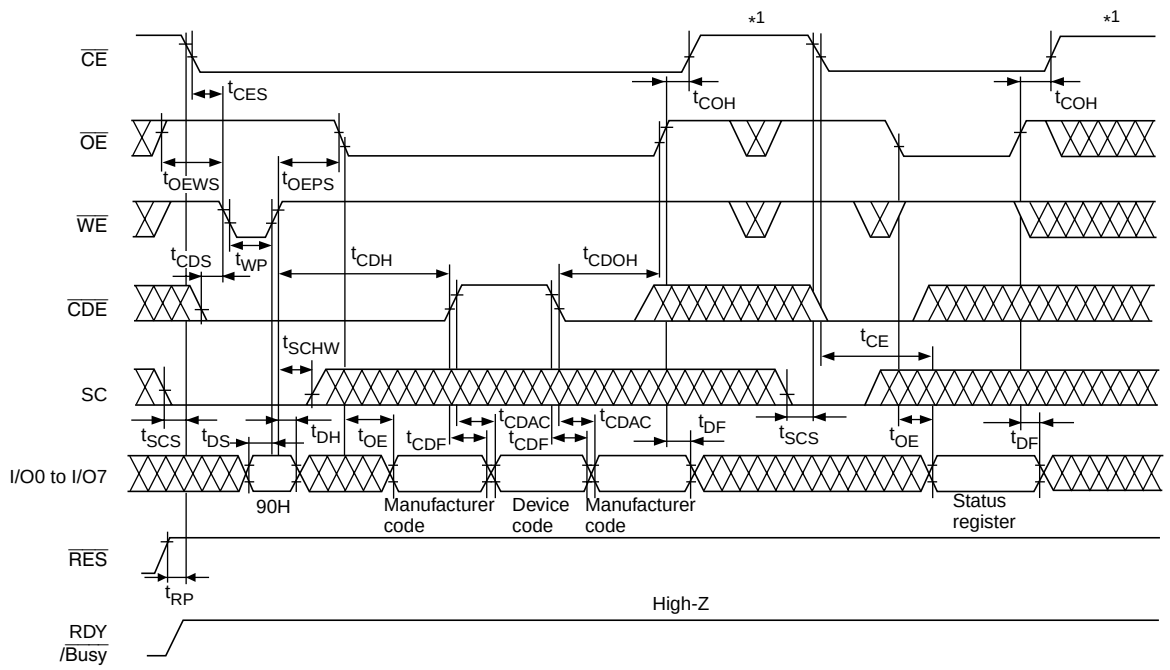

Note: 1. The status returns to the standby at the rising edge of $\overline{CE}$.

Data Recovery Read Timing Waveform

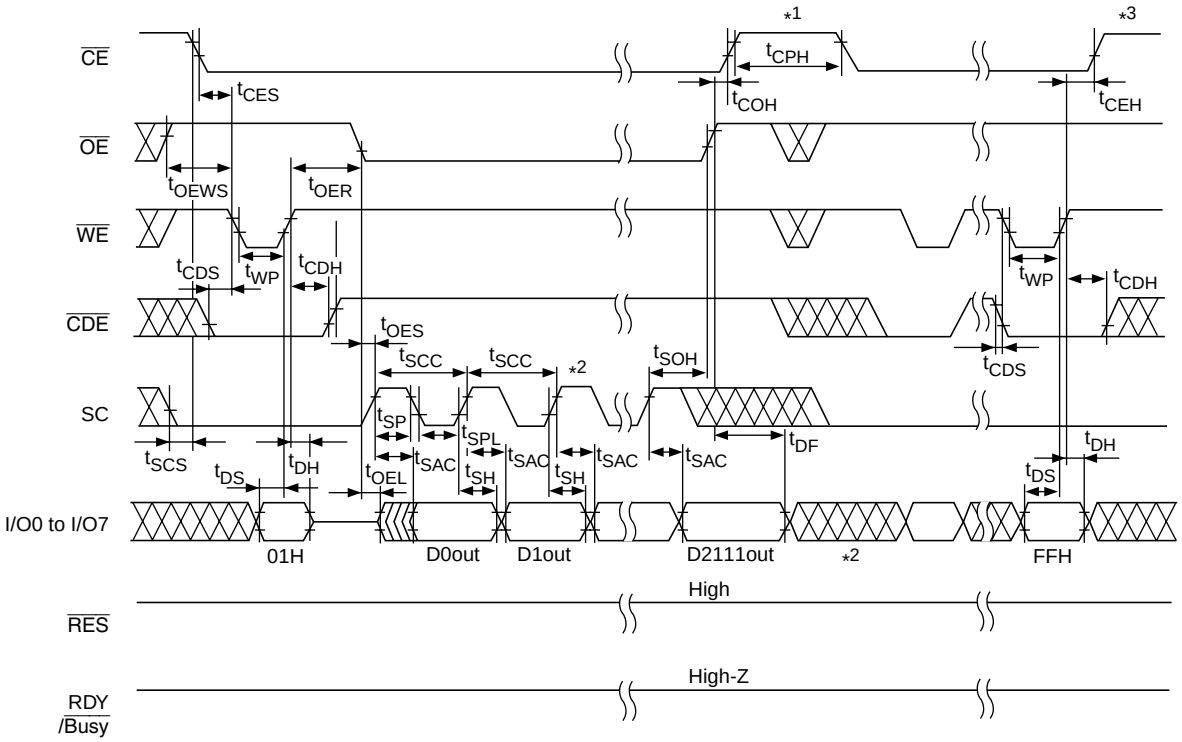

Notes: 1. The status returns to the standby at the rising edge of $\overline{CE}$.
2. Output data is not valid after the number of the SC pulse exceed 2112 in the recovery data read mode.
3. After any commands are written, the status can turns to the standby after the command FFH is input and $\overline{CE}$ turns to the V_{IH} level.

Data Recovery Write Timing Waveform

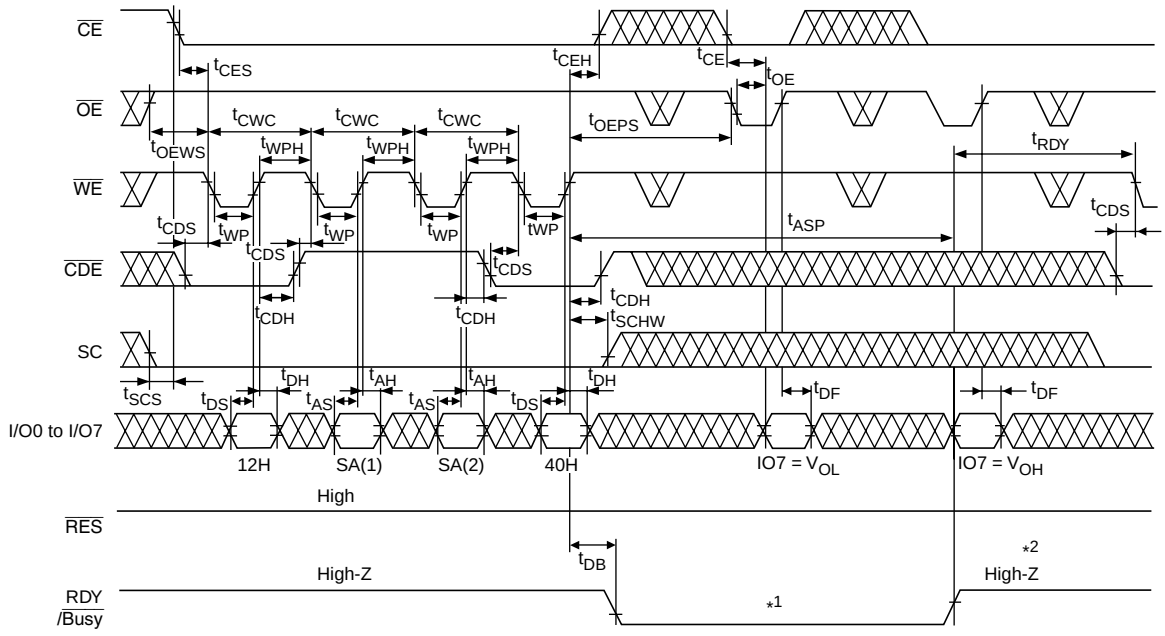

Notes: 1. Any commands,including reset command FFH, cannot be input while RDY/$\overline{\text{Busy}}$ is V_{OL}.
2. The status returns to the standby status after RDY/$\overline{\text{Busy}}$ returns to High-Z.

Clear Status Register Timing Waveform

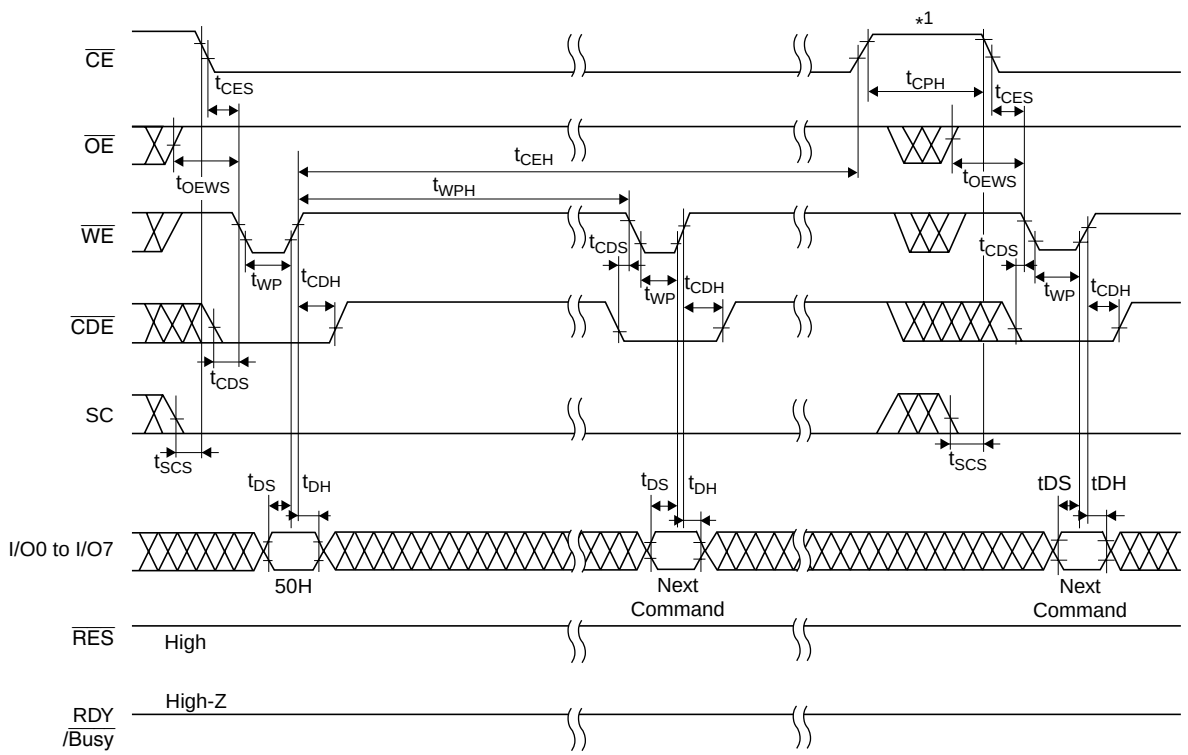

Note 1. The status returns to the standby at the rising edge of $\overline{CE}$.

Function Description

Status Register: The HN29V51211T-50H outputs the operation status data as follows: I/O7 pin outputs a V_{OL} to indicate that the memory is in either erase or program operation. The level of I/O7 pin turns to a V_{OH} when the operation finishes. I/O5 and I/O4 pins output V_{OL}s to indicate that the erase and program operations complete in a finite time, respectively. If these pins output V_{OH}s, it indicates that these operations have timed out. If I/O6 pin outputs V_{OH}, it indicates a possibility that can be corrected by ECC, choose data correction by ECC or not by reading out the data. When these pins monitor, I/O7 pin must turn to a V_{OH}. To execute other erase and program operation, the status data must be cleared after a time out occurs. From I/O0 to I/O3 pins are reserved for future use. The pins output V_{OL}s and should be masked out during the status data read mode. The function of the status register is summarized in the following table.

I/O	Flag definition	Definition
I/O7	Ready/$\overline{\text{Busy}}$	V_{OH} = Ready, V_{OL} = Busy
I/O6	Program/Erase ECC check	When I/O7 outputs V_{OH}, V_{OH} = ECC available, V_{OL} = ECC not available.
I/O5	Erase check	V_{OH} = Fail, V_{OL} = Pass
I/O4	Program check	V_{OH} = Fail, V_{OL} = Pass
I/O3	Reserved	Outputs a V_{OL} and should be masked out during the status data poling mode.
I/O2	Reserved	
I/O1	Reserved	
I/O0	Reserved	

ECC Applicability

I/O7	I/O6	I/O5	I/O4	System data correction by ECC
V_{OH}	V_{OH}	V_{OH}	V_{OL}	Needed
V_{OH}	V_{OL}	V_{OH}	V_{OL}	Not needed. Sector replacement
V_{OH}	V_{OH}	V_{OL}	V_{OH}	Needed
V_{OH}	V_{OL}	V_{OL}	V_{OH}	Not needed. Sector replacement

This device needs to be corrected failure data by ECC on system or Spare sectors, by reading out again the failure sector data when program/erase error occures.

Requirement for System

Specifications

Program/Erase Endurance: 3×10^5 cycles

Item	Min	Typ	Max	Unit
Usable sectors (initially)	32,113	—	32,768	sector
Spare sectors	579	—	—	sector
ECC (Error Correction Code)	3	—	—	bit/sector

Unusable Sector

Initially, the HN29V51211T-50H includes unusable sectors. The unusable sectors must be distinguished from the usable sectors by the system as follows.

1. Check the partial invalid sectors in the devices on the system. The usable sectors were programmed the following data. Refer to the flowchart “Indication of unusable sectors”.

Initial Data of Usable Sectors

Column address	0H to 81FH	820H	821H	822H	823H	824H	825H	826H to 83FH
Data	FFH	1CH	71H	C7H	1CH	71H	C7H	FFH

2. Do not erase and program to the partial invalid sectors by the system.

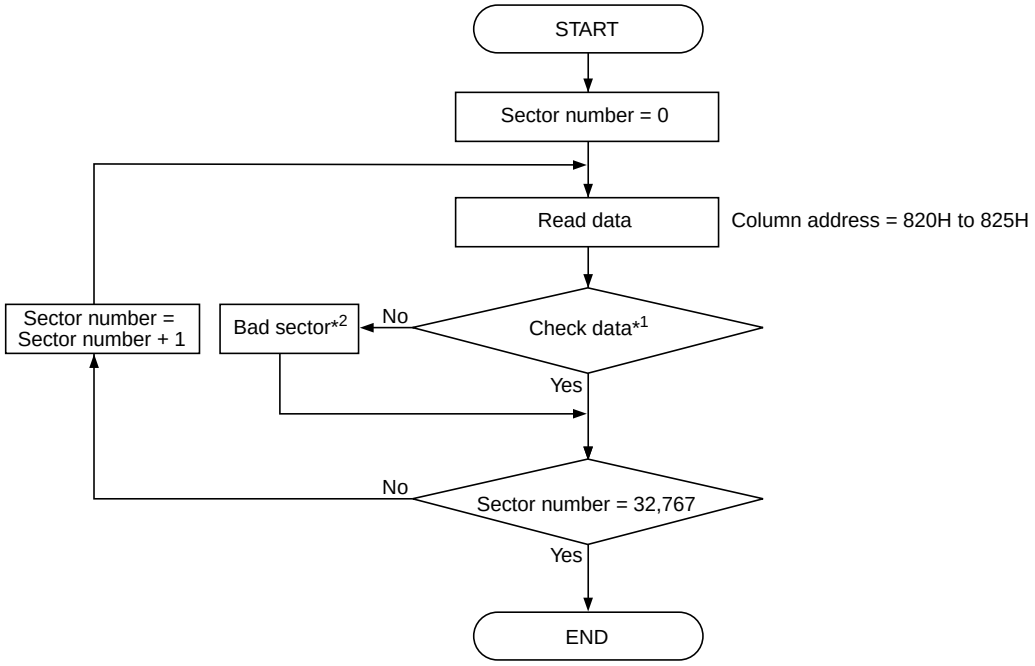

Notes: 1. Refer to table "Initial data of usable sectors".
2. Bad sectors are installed in system.

The Unusable Sector Indication Flow

Requirements for High System Reliability

The device may fail during a program, erase or read operation due to write or erase cycles. The following architecture will enable high system reliability if a failure occurs.

1. For an error in read operation: An ECC (Error Correction Code) or a similar function which can correct 3-bits per each sectors is required for data reliability. When error occurs, data must not be corrected by replacing to spare sector.
2. For errors in program or erase operations: The device may fail during a program or erase operation due to write or erase cycles. The status register indicates if the erase and program operation complete in a finite time. When an error occured in the sector, try to reprogram the data into another sector. Avoid further system access to the sector that error happens. Typically, recommended number of a spare sectors are 1.8% (579 sectors (min)) of initial usable 32,113 sectors (min) by each device. For the reprogramming, do not use the data from the failed sectors, because the data from the failed sectors are not fixed. So the reprogram data must be the data reloaded from the external buffer, or use the Data recovery read mode or the Data recovery write mode (see the “Mode Description” and under figure “Spare Sector Replacement Flow after Program Error”). To avoid consecutive sector failures, choose addresses of spare sectors as far as possible from the failed sectors. In this case, 10^5 cycles of program/erase endurance is guaranteed.
3. Prolongation of flash memory life: Due to the life of the memory prolongation, to do ware leveling at about 5000 each. The write/erase endurance is 3×10^5 cycles under the condition of the 3-bit error correction and of ware leveling at 5000 each.

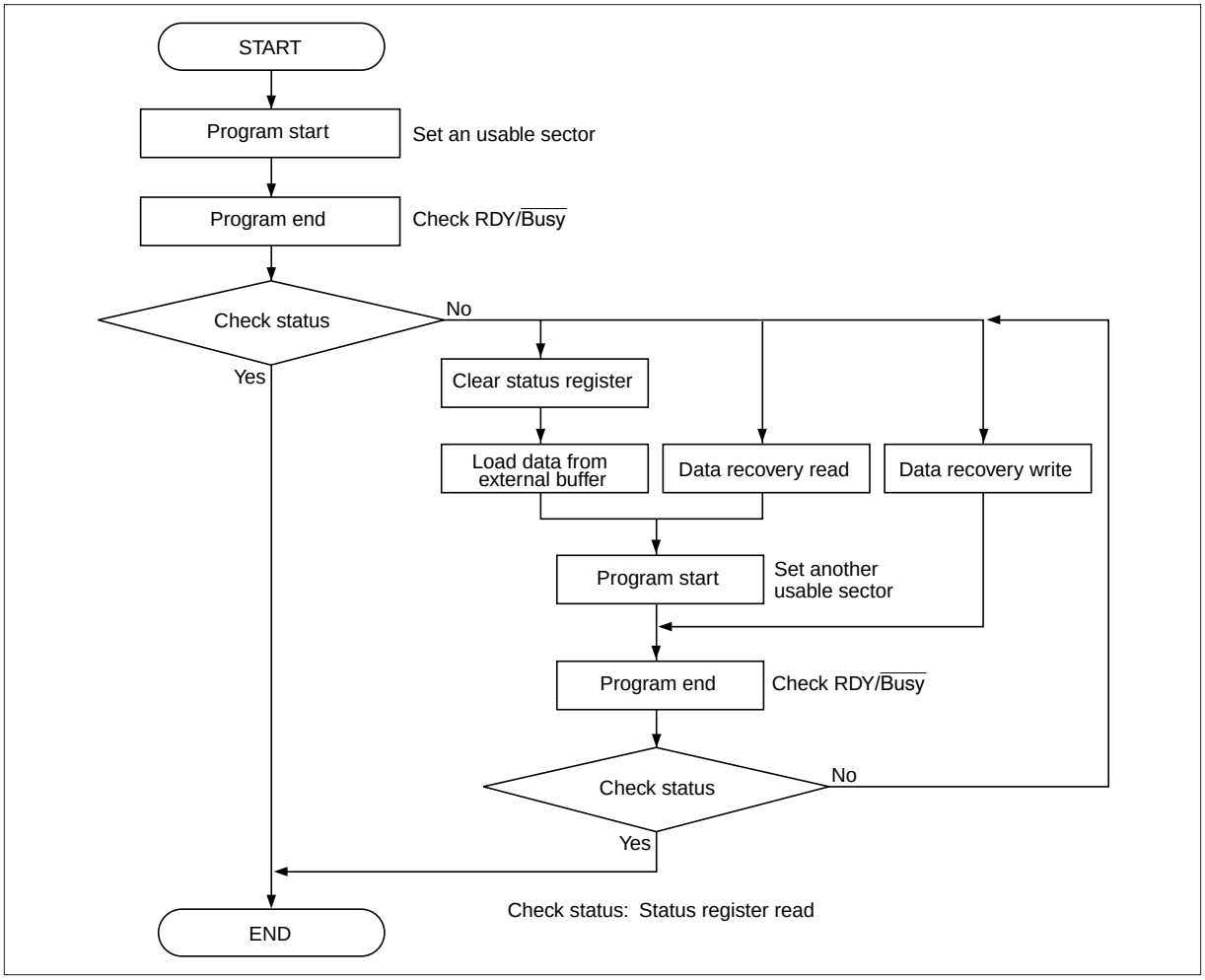

Spare Sector Replacement Flow after Program Error

For Errors in program or erase operations

The device may fail during a program or erase operation. Failure mode can be confirmed by read out the status register after complete the erase and program operations. There are two failure modes specified by each codes:

1: Status register error flag: I/O6 = V_{OL}

Replace sector under the "Spare Sectors Replacement Flow at Status Register I/O6 Read". Replacement must be applied to one sector(2k bytes) which contains failure bits.

2: Status register error flag: I/O6 = V_{OH}

Escape the program data temporary under the "Replacement Flow at Status Register I/O6 Read". If failure data can be corrected by ECC, do not replace to spare sector. If failure data can not be corrected by ECC, replace to spare sector. Replacement must be applied to one sector(2k bytes) which contains failure bits.

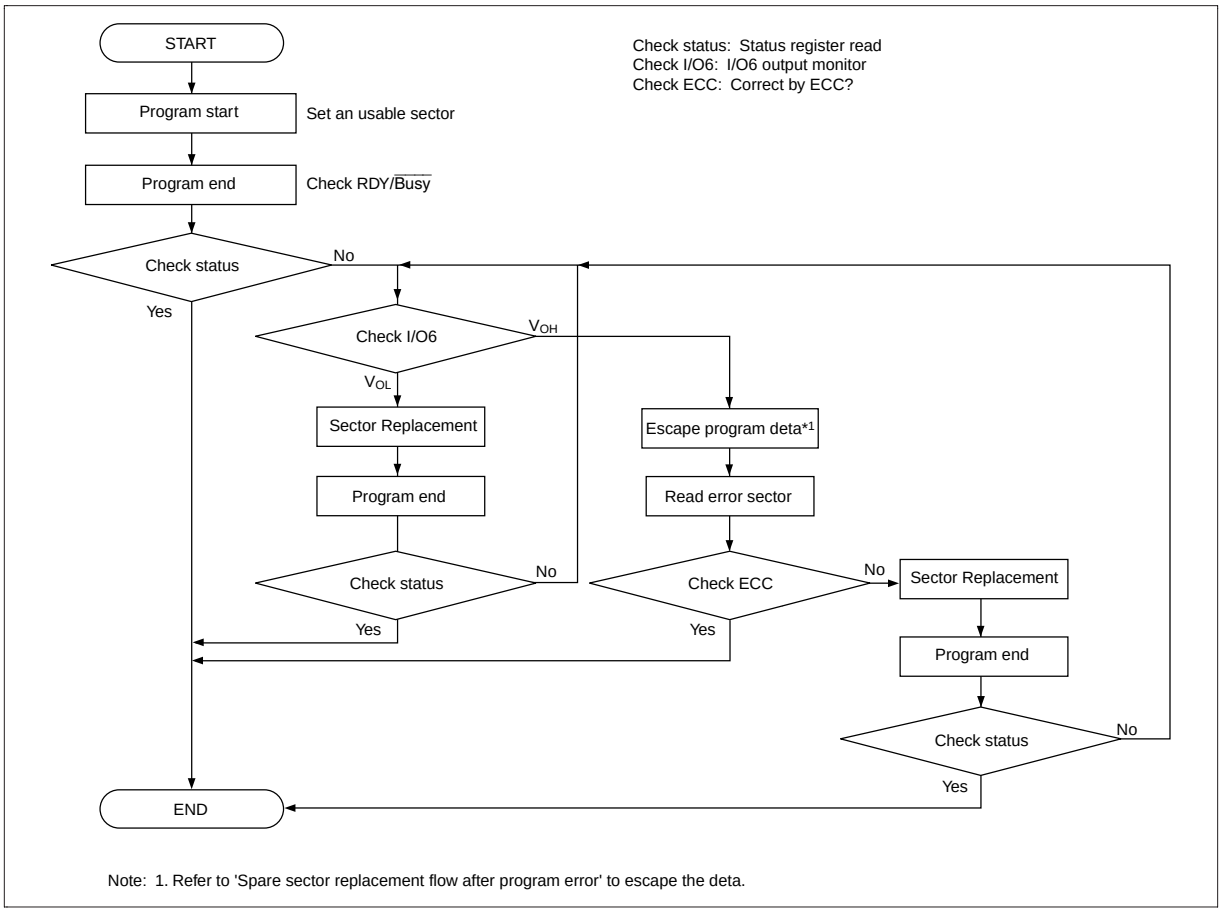

Spare Sectors Replacement Flow at Status Register I/O6 Read

Memory Structure

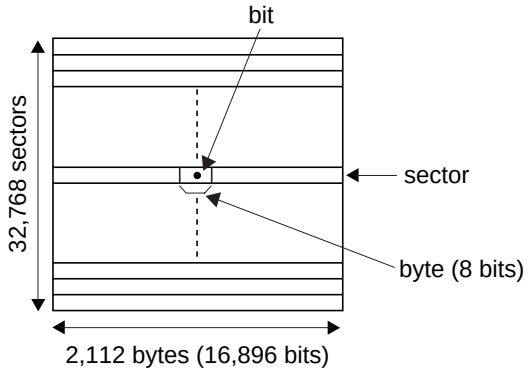

Bit: Minimum unit of data.

Byte: Input/output data unit in programming and reading. (1 byte = 8 bits)

Sector: Page unit in erase, programming and reading. (1 sector = 2,112 bytes = 16,896 bits)

Device: 1 device = 32,768 sectors.

Package Dimensions

HN29V51211T-50H (TFP-48DA)

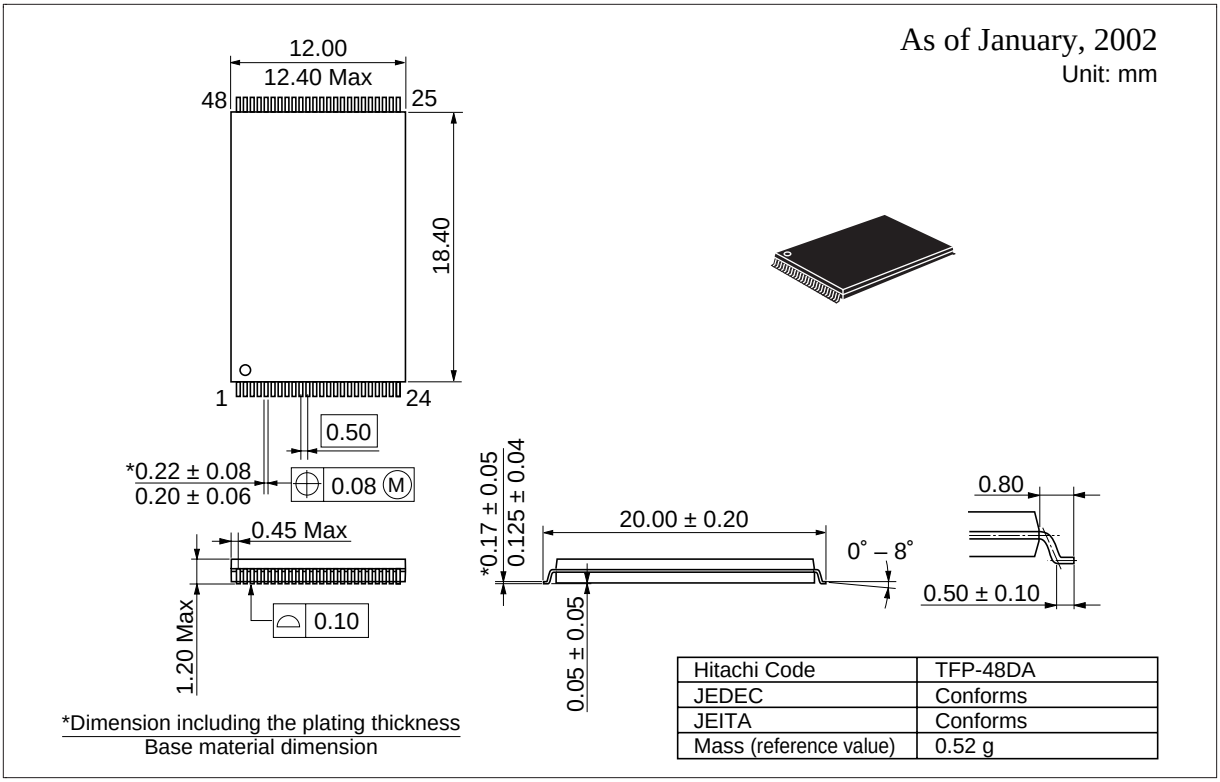

Hitachi Code	TFP-48DA
JEDEC	Conforms
JEITA	Conforms
Mass (reference value)	0.52 g

Cautions

1. Hitachi neither warrants nor grants licenses of any rights of Hitachi's or any third party's patent, copyright, trademark, or other intellectual property rights for information contained in this document. Hitachi bears no responsibility for problems that may arise with third party's rights, including intellectual property rights, in connection with use of the information contained in this document.
2. Products and product specifications may be subject to change without notice. Confirm that you have received the latest product standards or specifications before final design, purchase or use.
3. Hitachi makes every attempt to ensure that its products are of high quality and reliability. However, contact Hitachi's sales office before using the product in an application that demands especially high quality and reliability or where its failure or malfunction may directly threaten human life or cause risk of bodily injury, such as aerospace, aeronautics, nuclear power, combustion control, transportation, traffic, safety equipment or medical equipment for life support.
4. Design your application so that the product is used within the ranges guaranteed by Hitachi particularly for maximum rating, operating supply voltage range, heat radiation characteristics, installation conditions and other characteristics. Hitachi bears no responsibility for failure or damage when used beyond the guaranteed ranges. Even within the guaranteed ranges, consider normally foreseeable failure rates or failure modes in semiconductor devices and employ systemic measures such as fail-safes, so that the equipment incorporating Hitachi product does not cause bodily injury, fire or other consequential damage due to operation of the Hitachi product.
5. This product is not designed to be radiation resistant.
6. No one is permitted to reproduce or duplicate, in any form, the whole or part of this document without written approval from Hitachi.
7. Contact Hitachi's sales office for any questions regarding this document or Hitachi semiconductor products.

HITACHI

Hitachi, Ltd.
Semiconductor & Integrated Circuits
Nippon Bldg., 2-6-2, Ohte-machi, Chiyoda-ku, Tokyo 100-0004, Japan
Tel: (03) 3270-2111 Fax: (03) 3270-5109

URL http://www.hitachisemiconductor.com/

For further information write to:

Hitachi Semiconductor (America) Inc.
179 East Tasman Drive
San Jose,CA 95134
Tel: <1> (408) 433-1990
Fax: <1>(408) 433-0223

Hitachi Europe Ltd.
Electronic Components Group
Whitebrook Park
Lower Cookham Road
Maidenhead
Berkshire SL6 8YA, United Kingdom
Tel: <44> (1628) 585000
Fax: <44> (1628) 585200

Hitachi Europe GmbH
Electronic Components Group
Dornacher Straße 3
D-85622 Feldkirchen
Postfach 201,D-85619 Feldkirchen
Germany
Tel: <49> (89) 9 9180-0
Fax: <49> (89) 9 29 30 00

Hitachi Asia Ltd.
Hitachi Tower
16 Collyer Quay #20-00
Singapore 049318
Tel : <65>-538-6533/538-8577
Fax : <65>-538-6933/538-3877
URL : http://semiconductor.hitachi.com.sg

Hitachi Asia Ltd.
(Taipei Branch Office)
4/F, No. 167, Tun Hwa North Road
Hung-Kuo Building
Taipei (105), Taiwan
Tel : <886>-(2)-2718-3666
Fax : <886>-(2)-2718-8180
Telex : 23222 HAS-TP
URL : http://www.hitachi.com.tw

Hitachi Asia (Hong Kong) Ltd.
Group III (Electronic Components)
7/F., North Tower
World Finance Centre,
Harbour City, Canton Road
Tsim Sha Tsui, Kowloon Hong Kong
Tel : <852>-(2)-735-9218
Fax : <852>-(2)-730-0281
URL : http://semiconductor.hitachi.com.hk

Copyright © Hitachi, Ltd., 2001. All rights reserved. Printed in Japan.

Colophon 5.0