Product Standards

Part No.	AN17832A
Package Code No.	HSIP012-P-0000E

TENTATIVE

Analogue LSI Business Unit
Semiconductor Company
Matsushita Electric Industrial Co., Ltd.

Established by	Checked by	Checked by	Prepared by

3 May 2005	2 Sep 2005
Established	Revised

Contents

■ Overview 3
■ Features 3
■ Applications 3
■ Package 3
■ Type 3
■ Application Circuit Example 4
■ Block Diagram 5
■ Pin Descriptions 5
■ Absolute Maximum Ratings 6
■ Operating Supply Voltage Range 6
■ Electrical Characteristics 7
■ Test Circuit Diagram 8
■ Technical Data 9
1. I/O block circuit diagrams and pin function descriptions 9
2. Power Dissipation Curve 13
■ Usage Notes 14

TENTATIVE

AN17832A

A dual channel OCL and single channel BTL audio power amplifier IC

■ Overview

AN17832A is a monolithic integrated circuit designed for 15W X 2 (4Ω) and 30W X 1 (8Ω) outputs audio power amplifier. It is a dual channel OCL and single channel BTL IC suitable for operation in audio application. It has built-in Standby and Muting functions.

■ Features

1. Few external components –no negative feedback capacitors.
2. Built-in Standby/Mute circuit.
3. Built-in Thermal Protection circuit.
4. High ripple rejection.
5. Operating voltage range from ±5V ~ ±15V (±12V typ.)

■ Applications

- IC for audio applications

■ Package

- HSIP012-P-0000E

■ Type

- Silicon Monolithic Bipolar IC

TENTATIVE

■ Application Circuit Example

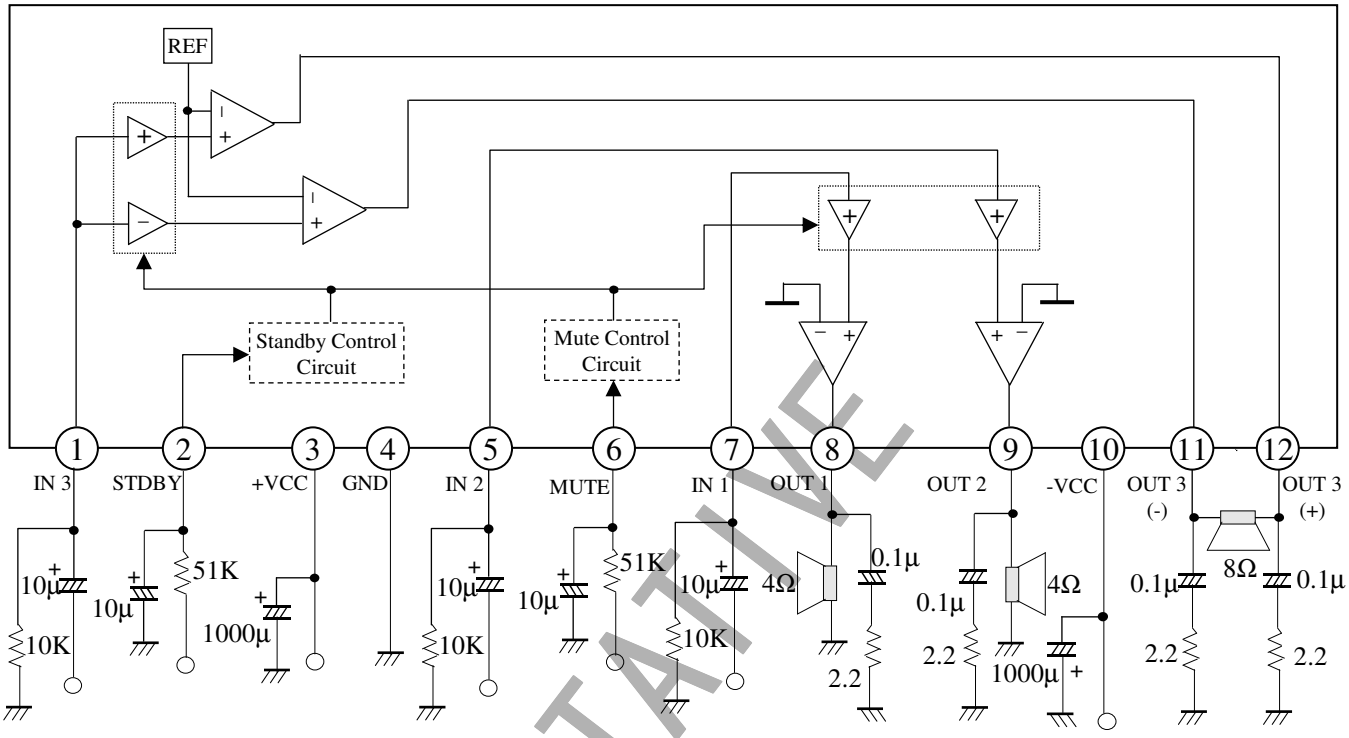

TENTATIVE

■ Block Diagram

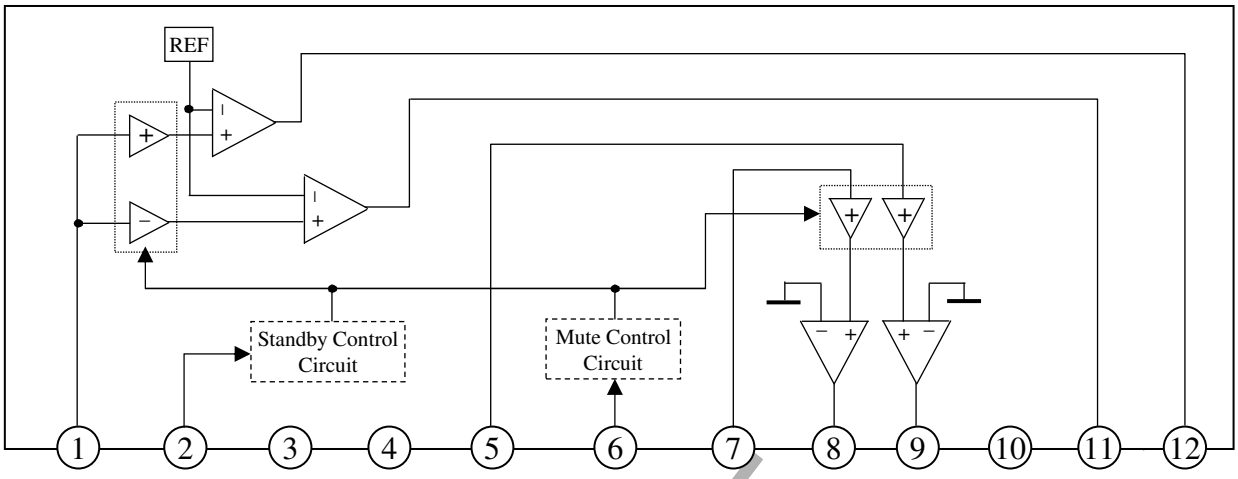

TENTATIVE

■ Pin Descriptions

Pin No.	Pin name	Type	Description
1	IN3	In	Channel 3 input
2	STDBY	In	Standby control
3	+VCC	In	Positive Power Supply
4	GND	Ground	Ground
5	IN2	In	Channel 2 input
6	MUTE	In	Mute Control
7	IN1	In	Channel 1 input
8	OUT1	Out	Channel 1 output
9	OUT2	Out	Channel 2 output
10	-VCC	In	Negative Power Supply
11	OUT3(-)	Out	Channel 3 negative phase output
12	OUT3(+)	Out	Channel 3 positive phase output

■ Absolute Maximum Ratings

A No.	Parameter	Symbol	Rating	Unit	Note
1	Supply voltage	V_{CC}	±17.0	V	*1
2	Supply current	I_{CC}	11.0	A	
3	Power dissipation	P_D	37.5	W	*2
4	Operating ambient temperature	T_{opr}	−20 to +75	°C	*3
5	Storage temperature	T_{stg}	−55 to +150	°C	*3

Note) *1: The values under the condition not exceeding the above absolute maximum ratings and the power dissipation.
*2: The power dissipation shown is the value at T_a = 75°C for the independent IC package with infinite heat sink.
Refer to the package power dissipation curve (page 13) and use under the condition not exceeding the allowable value.
*3: Except for the operating ambient temperature and storage temperature, all ratings are for T_a = 25°C.

■ Operating supply voltage range

Parameter	Symbol	Range	Unit	Note
Positive supply voltage range	$+V_{CC}$	5.0 to 15.0	V	—
Negative supply voltage range	$-V_{CC}$	-5.0 to -15.0	V	—

TENTATIVE

■ Electrical Characteristics at Vcc = ±12V, Vstb = 5V, Mute = 0V, RL (BTL) = 8Ω, RL (OCL) = 4Ω, freq = 1KHz unless otherwise specified. (Note: T_a = 25°C±2°C unless otherwise specified.)

B No.	Parameter	Symbol	Test circuits	Conditions	Limits			Unit	Note
					Min	Typ	Max		
1	Quiescent Circuit Current	I_{CQ}	1	Vin=0mV	-	150	300	mA	
2	Standby Current	I_{STB}	1	Vin=0mV	-	1	10	µA	
3	Output Noise Voltage 1 (BTL)	Vno1	1	Vin=0mV	-	0.3	0.5	mVrms	1
4	Output Noise Voltage 2 (OCL)	Vno2	1	Vin=0mV	-	0.15	0.3	mVrms	1
5	Standby On Voltage	Vstb-on	1	$I_{STB} \leq$ 10uA	0	-	1.0	V	
6	Standby Off Voltage	Vstb-off	1	No Input	3.0	-	5.0	V	
7	Mute On Voltage	Mute-on	1	Muting Ratio ≥ 60dB	3.0	-	5.0	V	
8	Mute Off Voltage	Mute-off	1	$G_{V1} \geq$ 38dB $G_{V2} \geq$ 32dB	0	-	1.0	V	
[BTL Channel]									
9	Voltage Gain 1	G_{V1}	1	Vin=20mV	36	38	40	dB	
10	Total Harmonic Distortion 1	THD1	1	Vin=20mV	-	0.1	0.4	%	
11	Maximum Output Power 1	Po1	1	THD=10%	25	30	-	W	
12	Channel Crosstalk 1	CT1	1	Vin=20mV	50	60	-	dB	
13	Output Offset Voltage	Voff	1	No Input	-350	0	350	mV	
14	Ripple Rejection 1	RR1	1	f_r=100Hz, Vr = 0.5Vrms	45	55	-	dB	1
15	Muting Ratio 1	MR1	1	Mute = 3V	60	70	-	dB	
[OCL Channel]									
16	Voltage Gain 2	G_{V2}	1	Vin=57mV	32	34	36	dB	
17	Total Harmonic Distortion 2	THD2	1	Vin=57mV	-	0.1	0.4	%	
18	Maximum Output Power 2	Po2	1	THD=10%	12	15	-	W	
19	Channel Balance	CB	1	Vin=57mV	-1	0	1	dB	
20	Channel Crosstalk 2	CT2	1	Vin=57mV	50	60	-	dB	
21	Ripple Rejection 2	RR2	1	f_r=100Hz, Vr = 0.5Vrms	45	55	-	dB	1
22	Muting Ratio 2	MR2	1	Mute = 3V	60	70	-	dB	

Note) *1: For this measurement, use the 20Hz ~ 20kHz (12dB/OCT) filter.

TENTATIVE

■ Test Circuit Diagram

Test Circuit 1

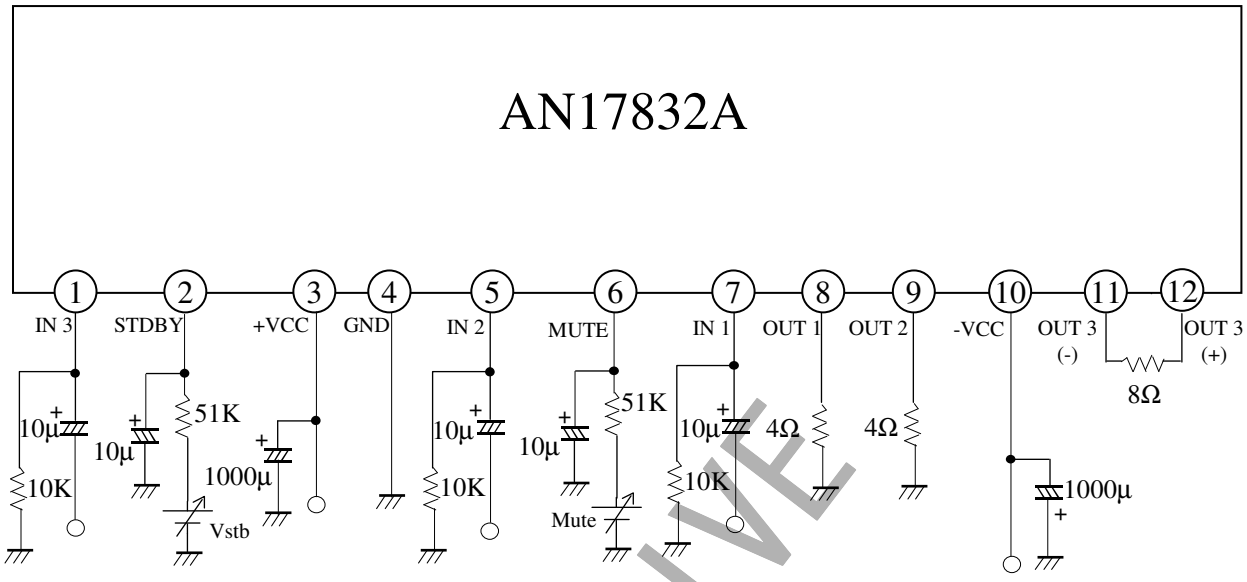

TENTATIVE

■ Technical Data

1. I/O block circuit diagrams and pin function descriptions

Note) The characteristics listed below are reference values based on the IC design and are not guaranteed.

Pin No.	Internal circuit	Description
1	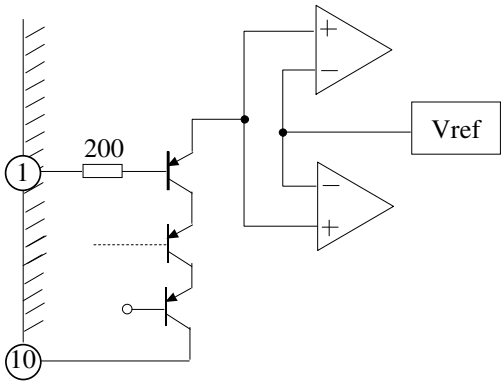	Channel 3 BTL Input
2	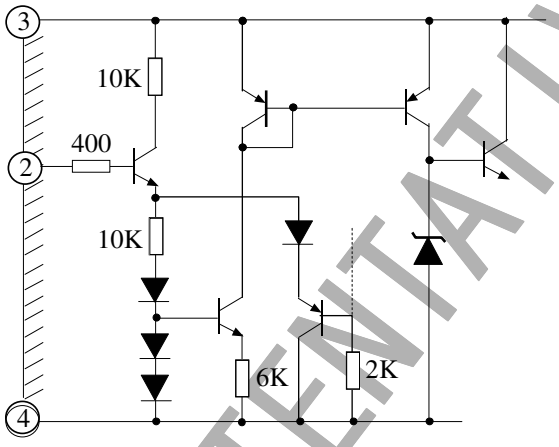	Standby Control Pin
3	-	VCC
4	-	Ground

TENTATIVE

■ Technical Data

1. I/O block circuit diagrams and pin function descriptions

Note) The characteristics listed below are reference values based on the IC design and are not guaranteed.

Pin No.	Internal circuit	Description
5	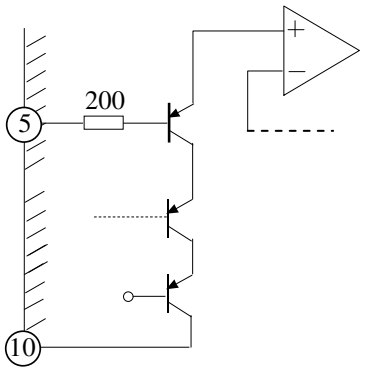	Channel 1 OCL Input
6	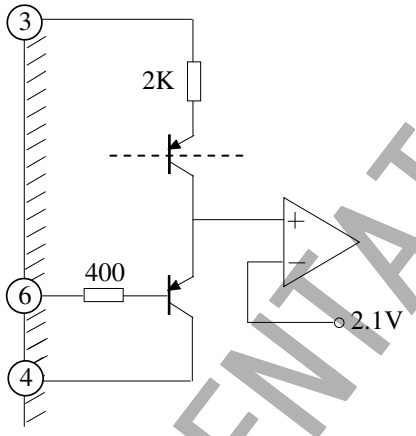	Mute Control
7	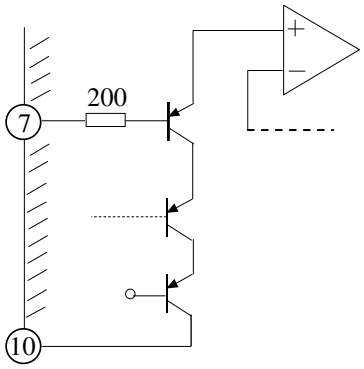	Channel 2 OCL Input

TENTATIVE

■ Technical Data

1. I/O block circuit diagrams and pin function descriptions

Note) The characteristics listed below are reference values based on the IC design and are not guaranteed.

Pin No.	Internal circuit	Description
8	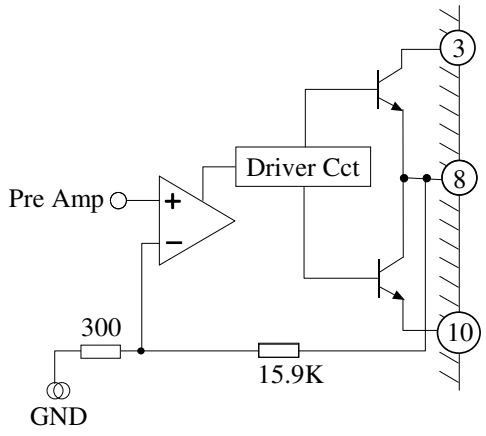	Channel 1 OCL Output
9	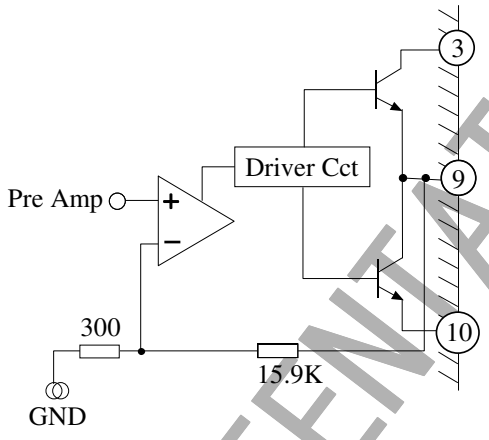	Channel 2 OCL Output
10	-	-VCC

TENTATIVE

■ Technical Data

1. I/O block circuit diagrams and pin function descriptions

Note) The characteristics listed below are reference values based on the IC design and are not guaranteed.

Pin No.	Internal circuit	Description
11	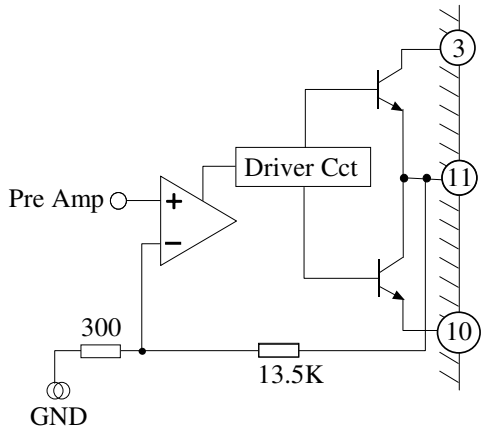	Channel 3 negative phase output
12	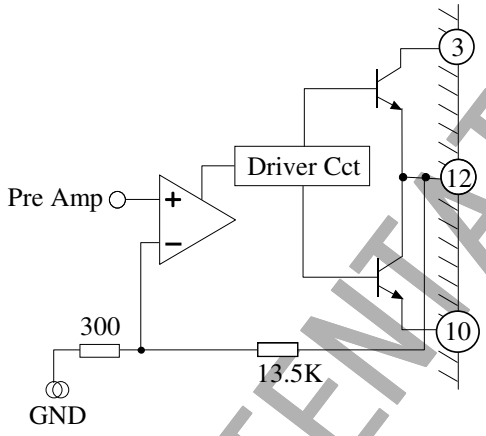	Channel 3 positive phase output

TENTATIVE

■ Technical Data

1. Power Dissipation Curve

(1) Tc = Ta, 62.5W (θj-c = 2 °C/W)

(2) 20.83W (θf = 4.0 °C/W)

With a 100cm ^{2}X 3mm Al heat sink (black colour coated)

or a 200cm ^{2}X 2mm Al heat sink (not lacquered)

(3) 15.63W (θf = 6.0 °C/W)

With a 100cm ^{2}X 2mm Al heat sink (not lacquered)

(4) 3.0W at Ta = 25°C (θj-a = 42°C/W)

Without heat sink

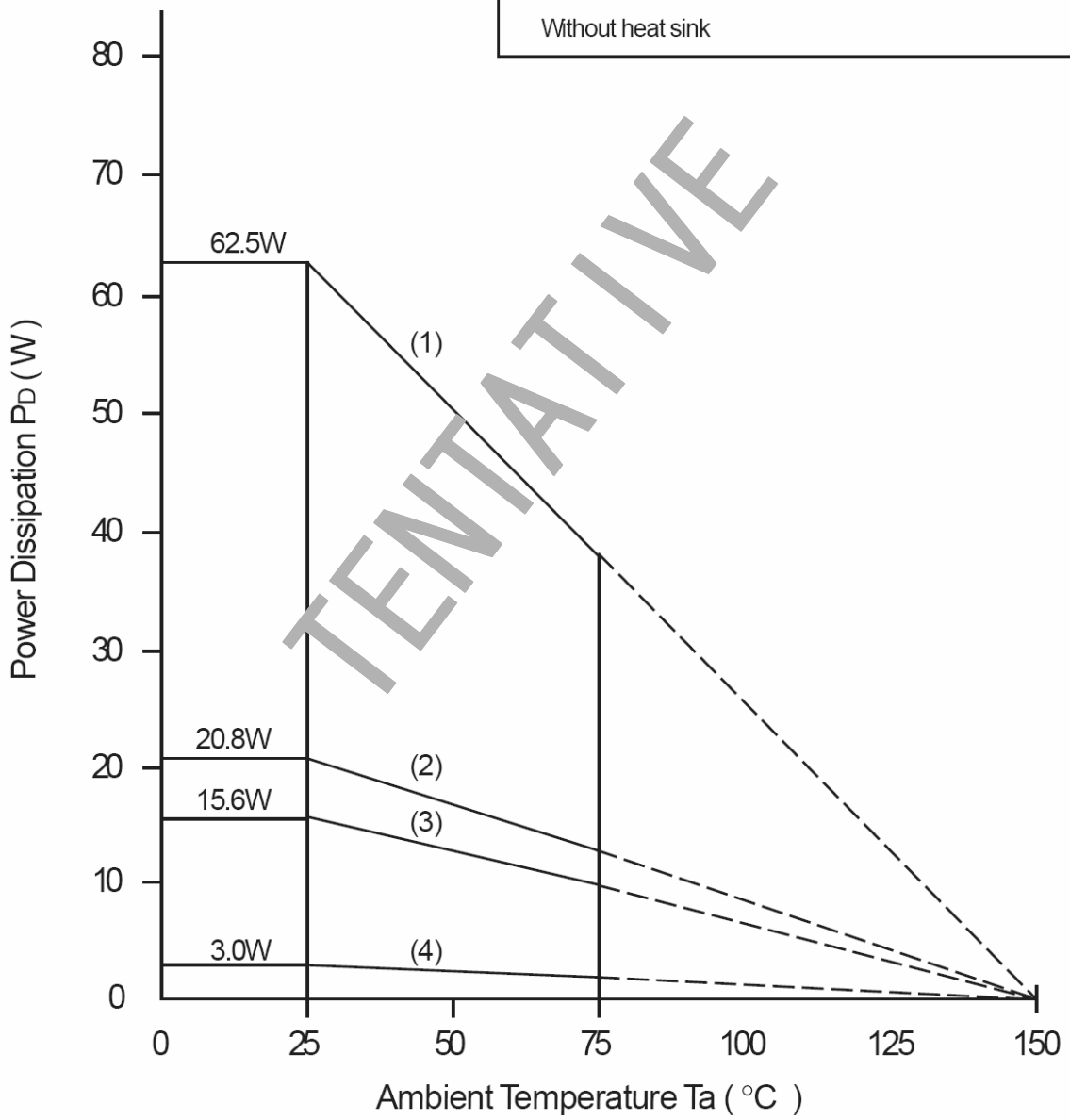

TENTATIVE

■ Usage Notes

1. Ground the radiation fin so that there will be no difference in electric potential between the radiation fin and ground.

2. The thermal protection circuit operates at a Tj of approximately 150°C. The thermal protection circuit is reset automatically when the temperature drops.

3. For installation to heat-sink, grease for heat-sink should be applied to reduce the contact heat resistance and increase the radiating effect. Ensure that there is no foreign objects between IC and heat-sink which may cause cracks and additional stress to the IC.

4. The IC should be mounted onto a flat-surfaced heat-sink first, in a manner where little stress is applied, then solder the leads of the IC to the board.

5. If the tightening torque of the heat-sink is too low, the heat resistance will become large. If it is too high, the physical device will be distorted which might result in a failure. The tightening torque recommended is 78.5N.cm.

6. Fasten the heat-sink firmly on the chassis or board. Do not create a structure where the heat-sink is supported by the IC.

7. In the event of abnormal operation condition whereby the output terminals swing towards supply/ground, the destruction of the speaker may result. As such, please ensure that the rating of the speaker is appropriate and made of non-flammable material.

8. Make sure that the IC is free of output pin short to ground, output pin short to Vcc and load short. The IC may be damaged under such conditions.

TENTATIVE

For Reference Only

AN17832A Package Dimensions (FP-12S)

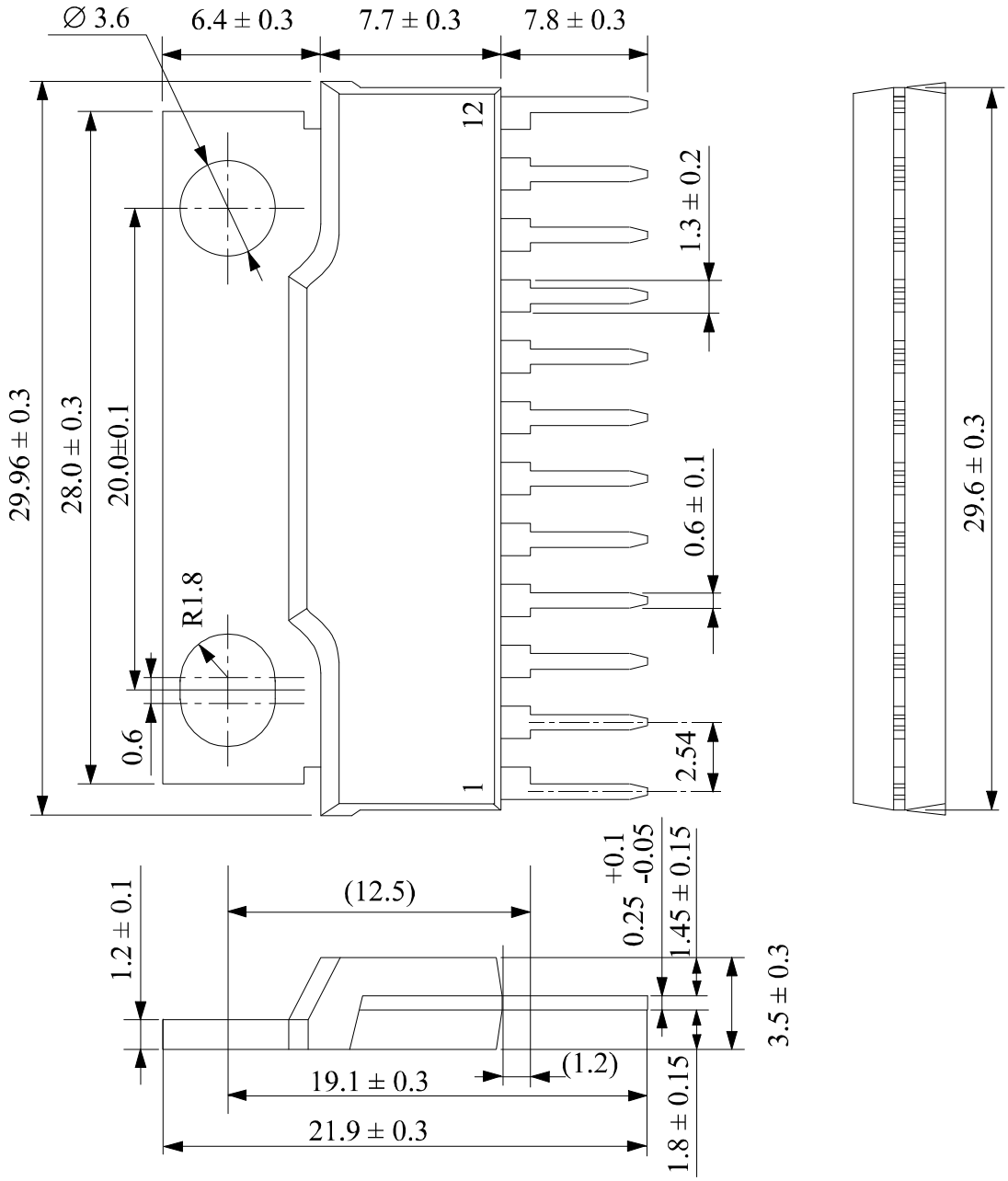

( ) : Reference value

Unit : mm