查询PLC01-6供应商 捷多邦，专业PCB打样工厂，24小时加急出货

05071

PROTEK DEVICES
. . . engineered solutions for the transient environment™

PLC01-6

HIGH POWER/ HIGH-SPEED TVS ARRAY

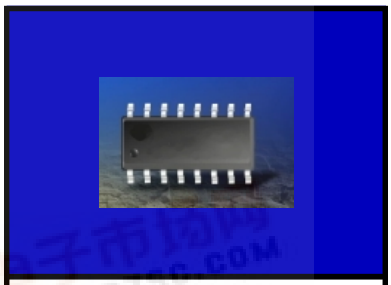

SO-16
(WIDE BODY)

APPLICATIONS

✔ T1/E1 Line Cards
✔ ISDN Telecom Equipment
✔ xDSL, USB, SCSI & Ethernet Interfaces
✔ Cellular Base Stations
✔ Data & Bus Lines for FCC Part 68 Applications

IEC COMPATIBILITY (EN61000-4)

✔ 61000-4-2 (ESD): Air - 15kV, Contact - 8kV
✔ 61000-4-4 (EFT): 40A - 5/50ns
✔ 61000-4-5 (Surge): 48A, 8/20µs - L3(Line-Gnd), L1(Power) & L4(Line-Line)

FEATURES

✔ *ESD PROTECTION > 40 kilovolts*
✔ 1,500 Watts Peak Pulse Power per Line (t_p=10/1000µs)
✔ Low Clamping Voltage
✔ 100A (10/1000µs) per Bellcore 1089(Intra-Building)
✔ 200A (10/160µs) per FCC Part 68

MECHANICAL CHARACTERISTICS

✔ Molded JEDEC SO-16 (Wide Body)
✔ Weight 0.15 grams (Approximate)
✔ Flammability Rating UL 94V-0
✔ 16mm Tape and Reel Per EIA Standard 481
✔ Device Marking: Part Number/Marking Code, Date Code & Logo
✔ Pin One Defined By DOT on Top of Package

CIRCUIT DIAGRAM

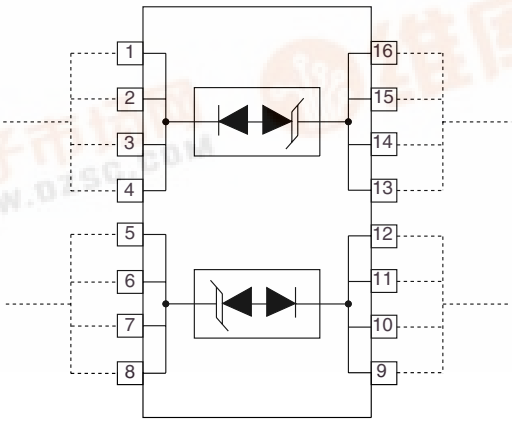

找PDF 维库一下 pdf.dzsc.com

DEVICE CHARACTERISTICS

MAXIMUM RATINGS @ 25°C Unless Otherwise Specified			
PARAMETER	SYMBOL	VALUE	UNITS
Peak Pulse Power (td = 10/1000µs) - See Figure 1	P_{PP}	1,500	Watts
Operating Temperature	T_J	-55°C to 150°C	°C
Storage Temperature	T_{STG}	-55°C to 150°C	°C

ELECTRICAL CHARACTERISTICS PER LINE @ 25°C Unless Otherwise Specified						
PART NUMBER (See Note 1)	RATED STAND-OFF VOLTAGE V_{WM} VOLTS	MINIMUM BREAKDOWN VOLTAGE @ 1mA $V_{(BR)}$ VOLTS	MAXIMUM CLAMPING VOLTAGE (See Note 2) @ I_P = 100A V_C VOLTS	MAXIMUM CLAMPING VOLTAGE (See Note 3) @ I_P = 200A V_C	MAXIMUM LEAKAGE CURRENT @ V_{WM} I_D µA	TYPICAL CAPACITANCE 0V @ 1 MHz C pF
PLC01-6	6.0	8.0	15.0	16.0	25	50

Note 1: Electrical characteristics apply from pins 13-16 to 1-4 and 5-8 to 9-12; see circuit diagram.
Note 2: V_C tested at 10/1000µs impulse waveform.
Note 3: 10/160µs impulse waveform per FCC Part 68.

GRAPHS

FIGURE 1
PEAK PULSE POWER VS PULSE TIME

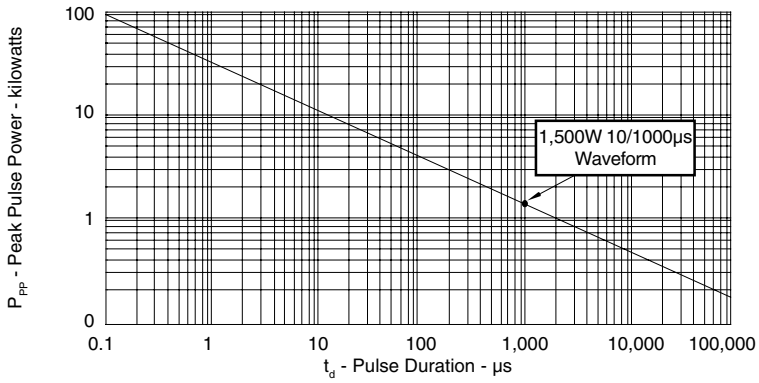

FIGURE 2
PULSE WAVE FORM

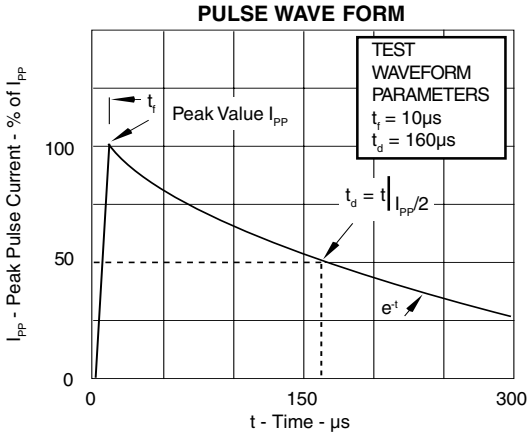

FIGURE 3
POWER DERATING CURVE

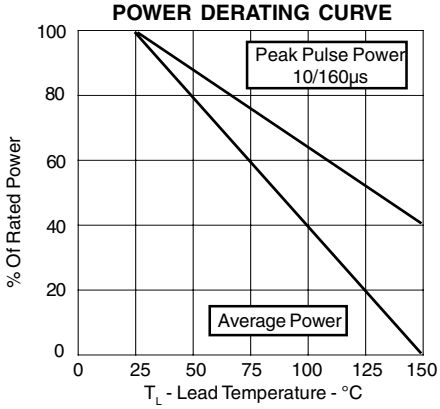

PACKAGE OUTLINE & DIMENSIONS

PACKAGE OUTLINE

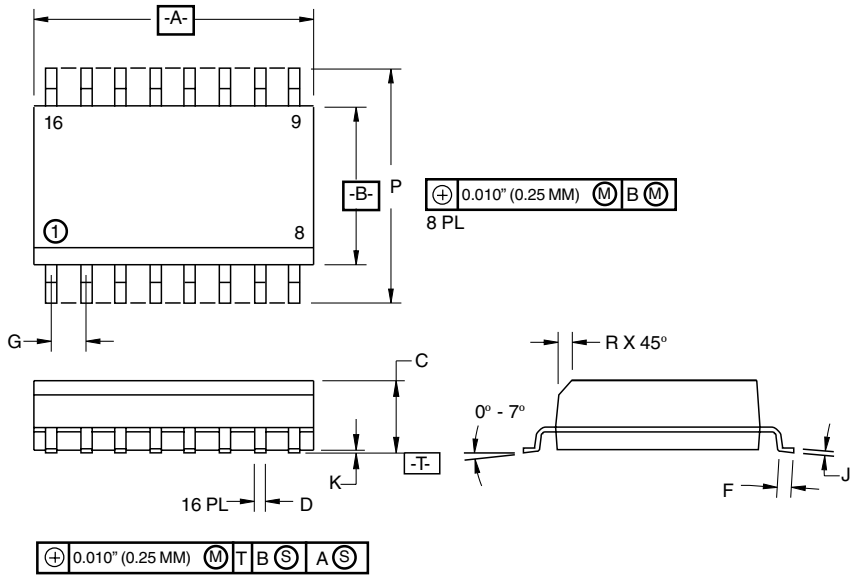

SO-16
(Wide Body)

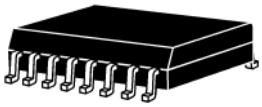

PACKAGE DIMENSIONS

DIM	MILLIMETERS MIN	MILLIMETERS MAX	INCHES MIN	INCHES MAX
A	10.15	10.45	0.400	0.411
B	7.40	7.60	0.292	0.299
C	2.35	2.65	0.093	0.104
D	0.35	0.49	0.014	0.019
F	0.50	0.90	0.020	0.035
G	1.27 BSC	1.27 BSC	0.05 BSC	0.05 BSC
J	0.25	0.32	0.010	0.012
K	0.10	0.25	0.004	0.009
P	10.05	10.55	0.395	0.415
R	0.25	0.75	0.010	0.029

MOUNTING PAD

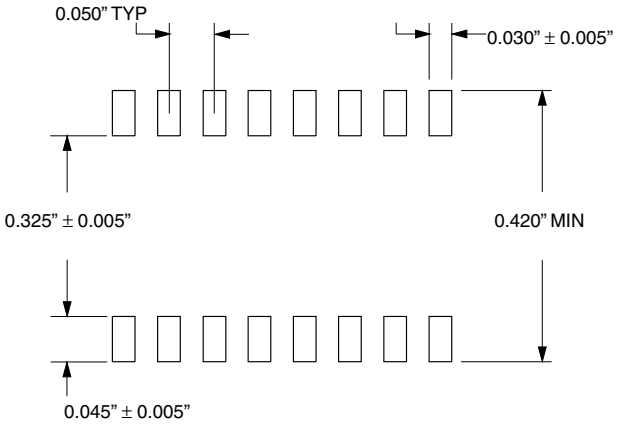

NOTES:
1. - T - = Seating Plane and Datum Surface.
2. Dimensions "A" and "B" are Datum.
3. Dimensions "A" and "B" do not include mold protrusions.
4. Maximum mold protrusion is 0.015" (0.380 mm) per side.
5. Dimensioning and tolerances per ANSI Y14.5M, 1982.
6. Dimensions are exclusive of mold flash and metal burrs.

06008 Rev 1 - 11/01

PART NUMBER SUFFIXES USED FOR TAPE & REEL/BULK ORDERING:
Surface mount product is taped and reeled in accordance with EIA-481.
Suffix-T13 = 13 Inch Reel - 1,000 pieces per reel i.e: PLC01-6 -T13
No Suffix = Product Shipped in Tubes of 46 pcs per Tube

ProTek Devices
2929 South Fair Lane, Tempe, AZ 85282
Tel: 602-431-8101 Fax: 602-431-2288
E-Mail: sales@protekdevices.com
Web Site: www.protekdevices.com

COPYRIGHT © ProTek Devices 2001
SPECIFICATIONS: ProTek reserves the right to change the electrical and or mechanical characteristics described herein without notice (except JEDEC).
DESIGN CHANGES: ProTek reserves the right to discontinue product lines without notice, and that the final judgement concerning selection and specifications is the buyer's and that in furnishing engineering and technical assistance, ProTek assumes no responsibility with respect to the selection or specifications of such products.