查询ULQ2003R供应商 捷多邦，专业PCB打样工厂，24小时加急出货

SGS-THOMSON MICROELECTRONICS

ULQ2001R/2R ULQ2003R/4R

SEVEN DARLINGTON ARRAYS

- SEVEN DARLINGTONS PER PACKAGE
- OUTPUT CURRENT 500 mA PER DRIVER (600 mA PEAK)
- OUTPUT VOLTAGE 50 V
- INTEGRAL SUPPRESSION DIODES FOR INDUCTIVE LOADS
- OUTPUT CAN BE PARRALLELED FOR HIGHER CURRENT
- TTL/CMOS/PMOS/DTL COMPATIBLE INPUTS
- INPUTS PINNED OPPOSITE OUTPUTS TO SIMPLIFY LAYOUT

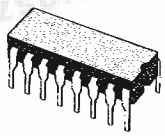

DIP-16 Ceramic

DESCRIPTION

The ULQ2001R, ULQ2002R, ULQ2003R and ULQ2004R are high voltage, high current darlington arrays each containing seven open collector darlington pairs with common emitters. Each channel is rated at 500 mA and can withstand peak currents of 600 mA. Suppression diodes are included for inductive load driving and the inputs are pinned opposite the outputs to simplify board layout.

The four versions interface to all common families.

ULQ2001R	General Purpose, DTL, TTL, CMOS
ULQ2002R	15-25 V PMOS
ULQ2003R	5 V TTL, CMOS
ULQ2004R	6-15 V CMOS, PMOS

These versatile devices are useful for driving a wide range of loads including solenoids, relays DC motors, LED displays, filament lamps, thermal printheads and high power buffers.

The ULQ2001R, ULQ2002R, ULQ2003R and ULQ 2004R are supplied in 16 pin ceramic DIP packages.

PIN CONNECTION

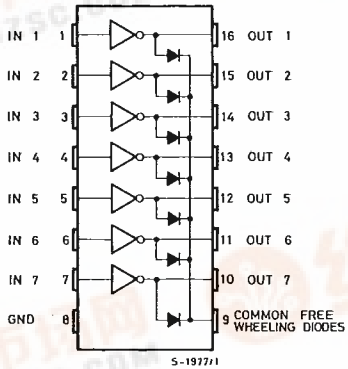

ABSOLUTE MAXIMUM RATINGS

Symbol	Parameter	Value	Unit
V_o	Output Voltage	50	V
V_{in}	Input Voltage (for ULQ2002R/2003R/2004R)	30	V
I_c	Continuous Collector Current	500	mA
I_b	Continuous Base Current	25	mA
T_{amb}	Operating Ambient Temperature Range	− 20 to + 85	°C
T_{stg}		− 55 to 150	°C

pdf.dzsc.com

SCHEMATIC DIAGRAM

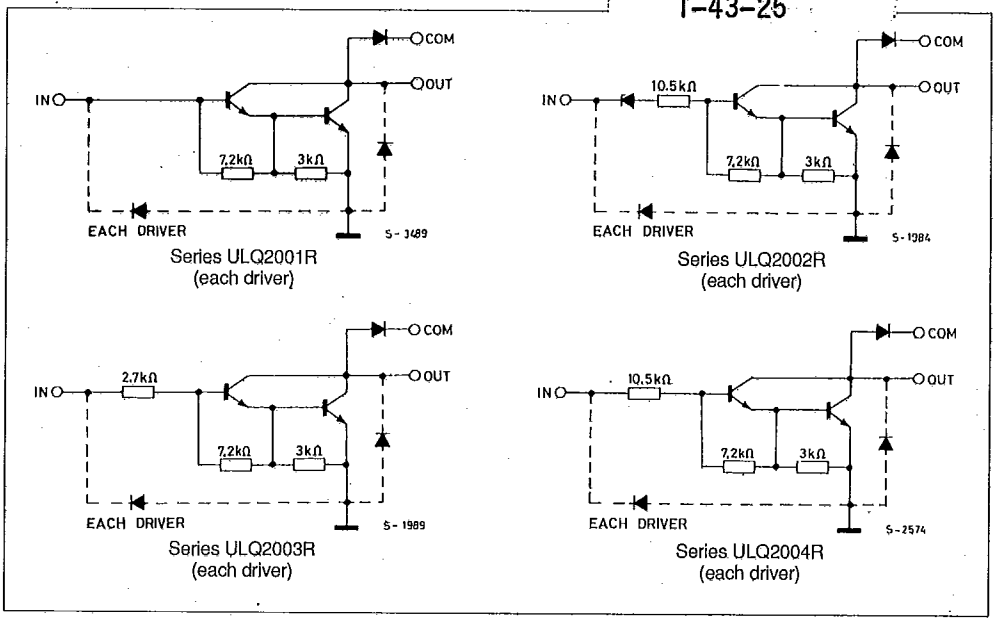

THERMAL DATA

$R_{th\ j\text{-}amb}$	Thermal Resistance Junction-ambient	Max	150	°C/W

ELECTRICAL CHARACTERISTICS (T_{amb}= 25° C unless otherwise specified)

Symbol	Parameter	Test Conditions		Min.	Typ.	Max.	Unit	Fig.
I_{CEX}	Output Leakage Current	V_{CE} = 50 V				50	µA	1a
		T_{amb} = 70 °C	V_{CE} = 50 V			100	µA	1a
		T_{amb} = 70 °C for **ULQ2002R**						
		V_{CE} = 50 V	V_i = 6 V			500	µA	1b
		for **ULQ2004R**						
		V_{CE} = 50 V	V_i = 1 V			500	µA	1b
$V_{CE\ (sat)}$	Collector-emitter Saturation Voltage	I_C = 100 mA	I_B = 250 µA		0.9	1.1	V	2
		I_C = 200 mA	I_B = 350 µA		1.1	1.3	V	2
		I_C = 350 mA	I_B = 500 µA		1.3	1.6	V	2
$I_{i(on)}$	Input Current	for **ULQ2002R**	V_i = 17 V		0.82	1.25	mA	3
		for **ULQ2003R**	V_i = 3.85 V		0.93	1.35	mA	3
		for **ULQ2004R**	V_i = 5 V		0.35	0.5	mA	3
		V_i = 12 V			1	1.45	mA	3
$I_{i(off)}$	Input Current	T_{amb} = 70 °C	I_C = 500 µA	50	65		µA	4
$V_{i(on)}$	Input Voltage	for **ULQ2002R**						
		V_{CE} = 2 V	I_C = 300 mA			13	V	5
		for **ULQ2003R**						
		V_{CE} = 2 V	I_C = 200 mA			2.4	V	5
		V_{CE} = 2 V	I_C = 250 mA			2.7	V	5
		V_{CE} = 2 V	I_C = 300 mA			3	V	5
		for **ULQ2004R**						
		V_{CE} = 2 V	I_C = 125 mA			5	V	
		V_{CE} = 2 V	I_C = 200 mA			6	V	5
		V_{CE} = 2 V	I_C = 275 mA			7	V	5
		V_{CE} = 2 V	I_C = 350 mA			8	V	5
h_{FE}	DC Forward Current Gain	for **ULQ2001R**						
		V_{CE} = 2 V	I_C = 350 mA	1000			-	2
C_i	Input Capacitance				15	25	pF	-
t_{PLH}	Turn-on Delay Time	0.5 V_i to 0.5 V_o			0.25	1	µs	-
t_{PHL}	Turn-off Delay Time	0.5 V_i to 0.5 V_o			0.25	1	µs	-
I_R	Clamp Diode Leakage Current	V_R = 50 V				50	µA	6
		T_{amb} = 70 °C	V_R = 50 V			100	µA	6
V_F	Clamp Diode Forward Voltage	I_F = 350 mA			1.7	2	V	7

TEST CIRCUITS

Figure 1a.

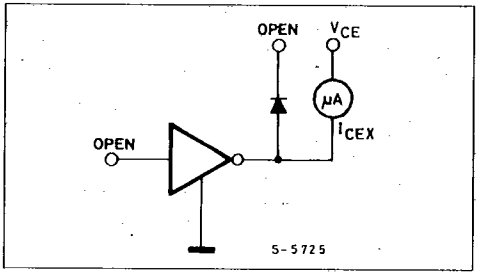

Figure 1b.

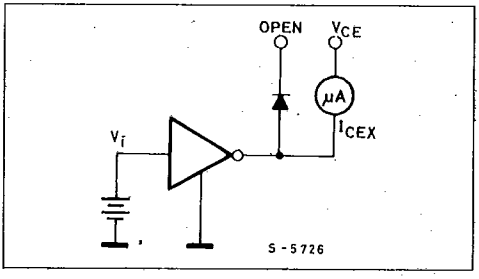

Figure 2.

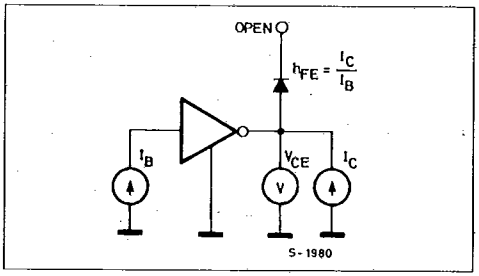

Figure 3.

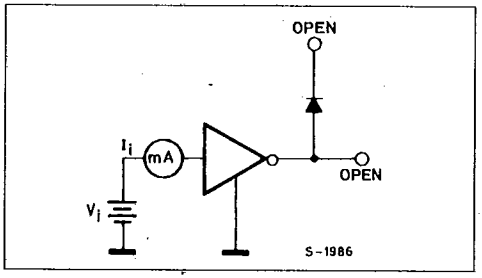

Figure 4.

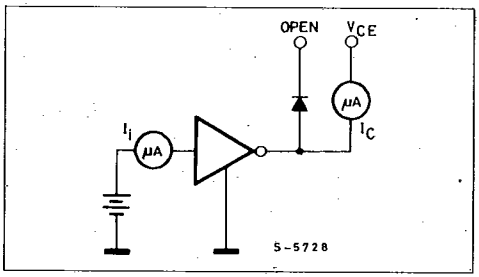

Figure 5.

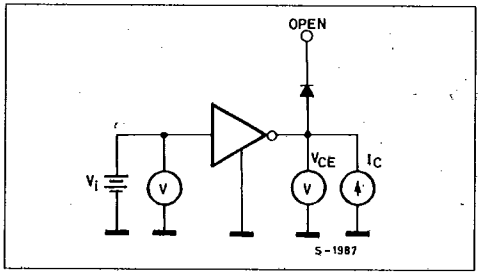

Figure 6.

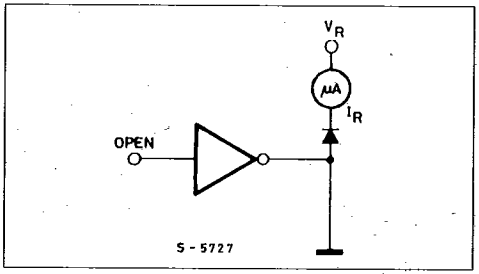
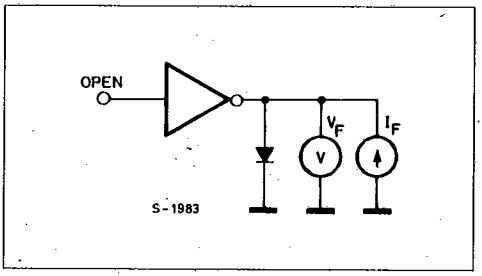
Figure 7.