查询X807供应商

捷多邦，专业PCB打样工厂，24小时加急出货

POWEREX

BS08A

Powerex, Inc., 200 Hillis Street, Youngwood, Pennsylvania 15697-1800 (412) 925-7272

Silicon Bilateral Switch

OUTLINE DRAWING

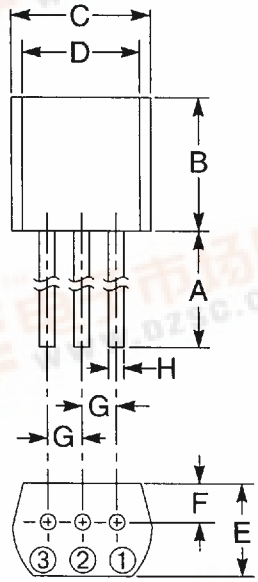

CONNECTION DIAGRAM

① TERMINAL 1
② GATE
③ TERMINAL 2

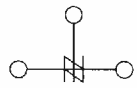

Outline Drawing

Dimensions	Inches	Millimeters
A	0.492 Min.	12.5 Min.
B	0.13 Max.	3.3 Max.
C	0.17	4.3
D	0.14	3.55
E	0.098 Max.	2.5 Max.
F	0.035	0.9
G	0.049 ± 0.012	1.25
		0.45

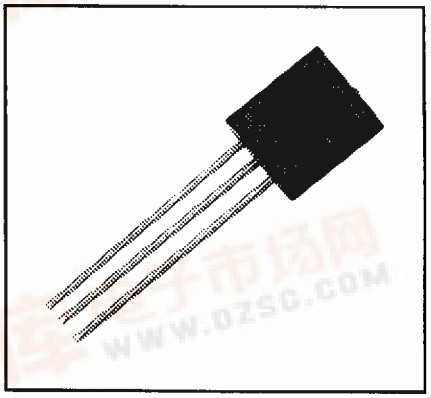

Description:
The BS08A bilateral switch is a silicon planar monolithic integrated circuit with the electrical characteristics of a bilateral thyristor. The device is designed to switch at 7 to 9 volts with a 0.01%/°C temperature coefficient and have excellently matched characteristics in both directions.

Features:
- ☐ Low Switching Voltage of 7 to 9 Volts
- ☐ Excellent Switching Voltage Temperature Characteristics (0.01%/°C)
- ☐ High Reliability Devices
- ☐ Gate Electrode Facilitating Switching Operation Control and Synchronization.

Applications:
- ☐ Trigger Circuits for Thyristor or Triac, Oscillators, Timers

Ordering Information:
Example: Select the complete five digit part number you desire from the table - i.e. BS08A is a 175mA Silicon Bilateral Switch.

Type
BS08A

找PDF 维库一下 pdf.dzsc.com

POWEREX

Powerex, Inc., 200 Hillis Street, Youngwood, Pennsylvania 15697-1800 (412) 925-7272

BS08A
Silicon Bilateral Switch

Absolute Maximum Ratings, T_a = 25 °C unless otherwise specified

Ratings	Symbol	BS08A	Units
DC Forward Anode Current	I_T	175	mA
Repetitive Peak Forward Current (1% Duty Cycle, 10μs Pulsewidth), T_a = 100°C	–	1.0	Amperes
Non-repetitive Peak Forward Current (10μs Pulsewidth)	–	2.0	Amperes
Power Dissipation	P_T	250	mW
DC Gate Current	I_G	5	mA
Storage Temperature	T_{stg}	-55 to 125	°C
Operating Temperature	T_j	-55 to 125	°C

Electrical and Thermal Characteristics, T_j = 25 °C unless otherwise specified

			BS08A			
Characteristics	Symbol	Test Conditions	Min.	Typ.	Max.	Units
Switching Voltage	V_S	T_a = 25°C	7	8	9	Volts
Switching Current	I_S	T_a = 25°C	–	–	200	μA
Absolute Switching Voltage Difference	$\|V_{S1}-V_{S2}\|$	T_a = 25°C	–	–	0.5	Volts
Absolute Switching Current Difference	$\|I_{S1}-I_{S2}\|$	T_a = 25°C	–	–	100	μA
Holding Current	I_H	T_a = 25°C	–	–	1.5	mA
Off-state Current	I_D	V_D = 5V, T_a = 25°C	–	–	1.0	μA
		V_D = 5V, T_a = 85°C	–	–	10	μA
Temperature Coefficient of Switching Voltage	–	T_a = -55 to 85°C	–	±0.01	–	%/°C
Peak On-state Voltage	V_T	I_T = 175mA, T_a = 25°C	–	–	1.4	Volts
Gate Trigger Current	I_{GT}	V_D = 5V, T_a = 25°C	10	–	200	μA
Gate Non-trigger Voltage	V_{GD}	V_D = 5V, T_a = 85°C	0.2	–	–	Volts

Powerex, Inc., 200 Hillis Street, Youngwood, Pennsylvania 15697-1800 (412) 925-7272

BS08A
Silicon Bilateral Switch

OFF-STATE CURRENT VS. JUNCTION TEMPERATURE (TYPICAL)

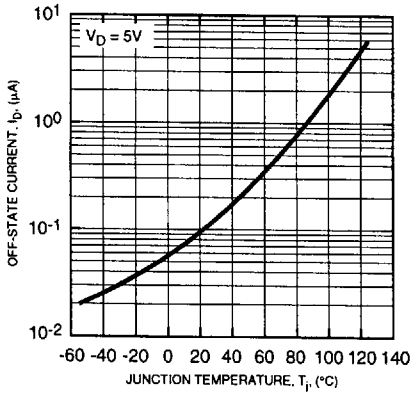

SWITCHING VOLTAGE VS.JUNCTION TEMPERATURE (TYPICAL)

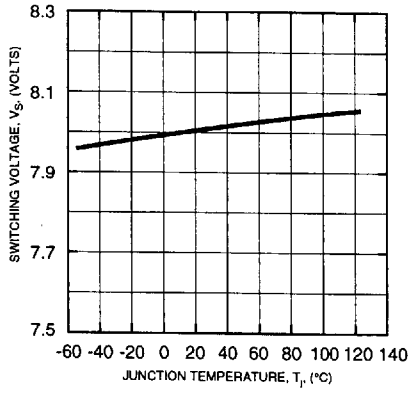

SWITCHING CURRENT VS. JUNCTION TEMPERATURE (TYPICAL)

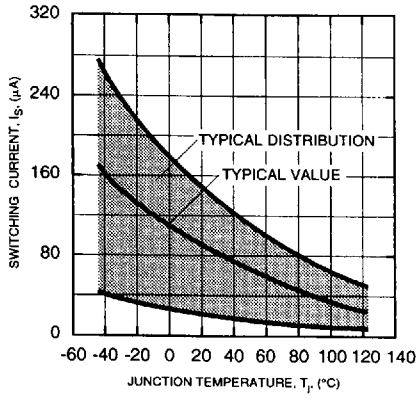

ON-STATE VOLTAGE VS. JUNCTION TEMPERATURE (TYPICAL)

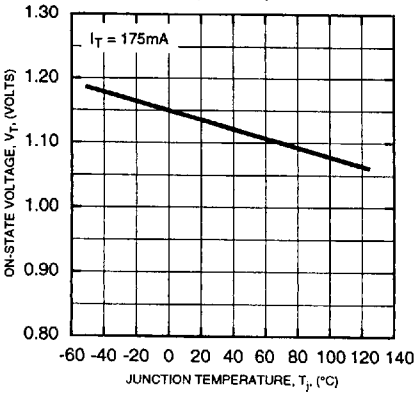

HOLDING CURRENT VS. JUNCTION TEMPERATURE (TYPICAL)

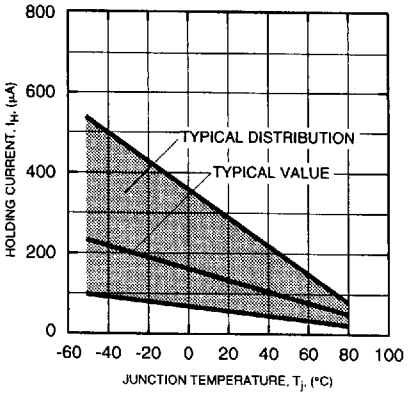

GATE TRIGGER CURRENT VS. JUNCTION TEMPERATURE (TYPICAL)

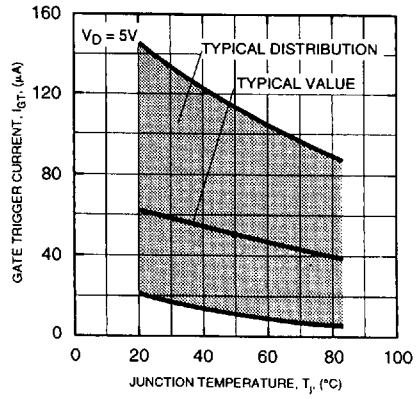

GATE TRIGGER VOLTAGE VS. JUNCTION TEMPERATURE (TYPICAL)

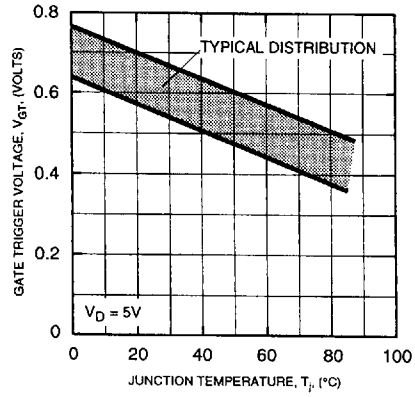

Powerex, Inc., 200 Hillis Street, Youngwood, Pennsylvania 15697-1800 (412) 925-7272

BS08A
Silicon Bilateral Switch

APPLICATION EXAMPLES

THYRISTOR TRIGGER CIRCUIT

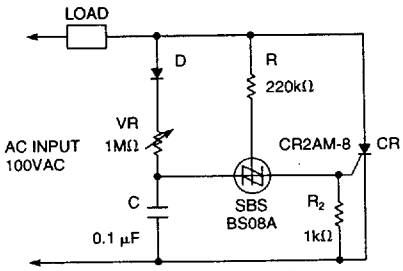

This circuit is widely used in DC motor contol and other control applications.

EQUIVALENT CIRCUIT

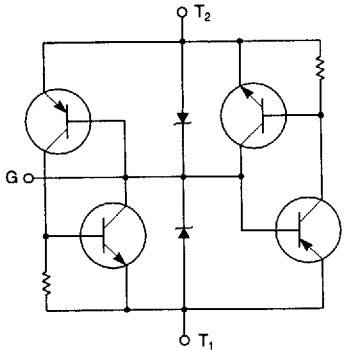

STATIC CHARACTERISTICS

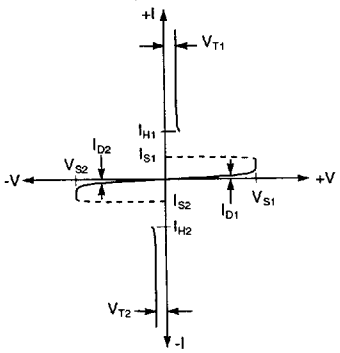

TRIAC TRIGGER CIRCUIT

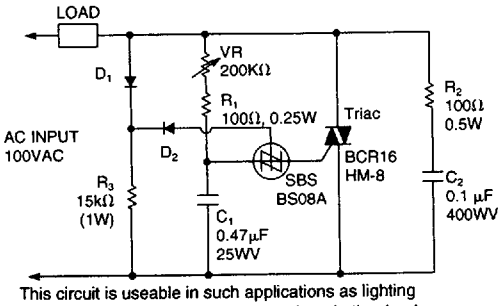

This circuit is useable in such applications as lighting control circuits, electric heater control, and other load control applications.

CIRCUIT SYMBOL

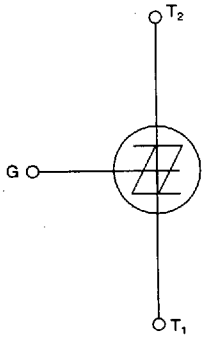

GATE CHARACTERISTICS MEASUREMENT CIRCUIT

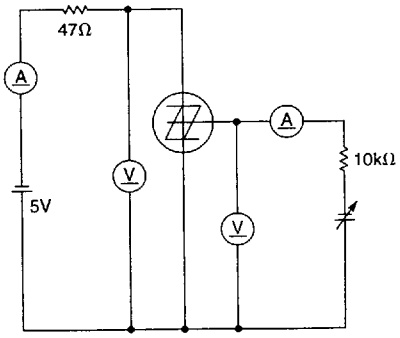

POWEREX

Powerex, Inc., Hillis Street, Youngwood, Pennsylvania 15697 (412) 925-7272
Powerex Europe, S.A., 428 Avenue G. Durand, BP107, 72003 Le Mans, France (43) 41.14.14

Taping

STANDARD SPECIFICATIONS FOR TAPING OF MOLDED PACKAGE THYRISTORS AND TRIACS

TO-92 Package

Thyristor
CR02AM, CR03AM, CR04AM
Triac
BCR1AM

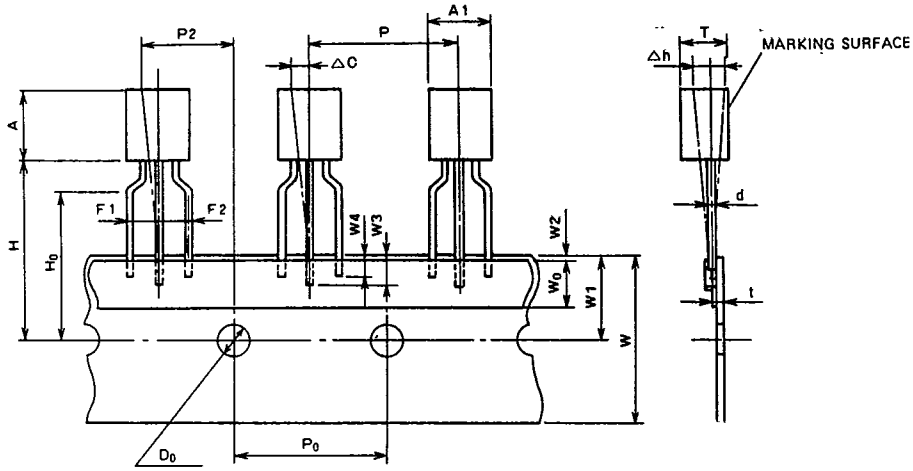

Taping dimensions

Description of symbol	Symbol	Dimensions (Unit:mm)	Remark
Product width	A1	5.0 MAX	
Product height	A	5.0 MAX	
Product thickness	T	3.7 MAX	
Lead wire diameter	d	0.6 MAX	
Sticker lead wire length (1)	W3	2.5 MIN	
Sticker lead wire length (2)	W4	2.0 MIN	
Pitch between products	P	12.7 ± 1.0	
Feed hole pitch	P_0	12.7 ± 0.3	The cumulative pitch error is ± 1mm per 20 pitches.
Feed hole deviation (1)	P2	6.35 ± 1.3	
Distance between lead wires	F1, F2	2.5 ± 0.4	
Defective product (1)	△h	0 ± 2.0	
Tape width	W	$18.0 \pm^{1.0}_{0.5}$	
Sticker tape width	W_0	6.0 ± 0.5	
Feed hole deviation (2)	W1	9.0 ± 0.5	
Sticker tape deviation	W2	0.5 MAX	
Position of product bottom surface	H	17.5 MIN	
Lynch height of lead wire	H_0	16.0 ± 0.5	
Feed hole diameter	D_0	4.0 ± 0.2	
Tape thickness	t	0.7 ± 0.2	
Defective product (2)	△C	0 ± 1.0	

POWEREX

T-91-01

Powerex, Inc., Hillis Street, Youngwood, Pennsylvania 15697 (412) 925-7272
Powerex Europe, S.A., 428 Avenue G. Durand, BP107, 72003 Le Mans, France (43) 41.14.14

Powerex Semiconductor Data Book
Taping

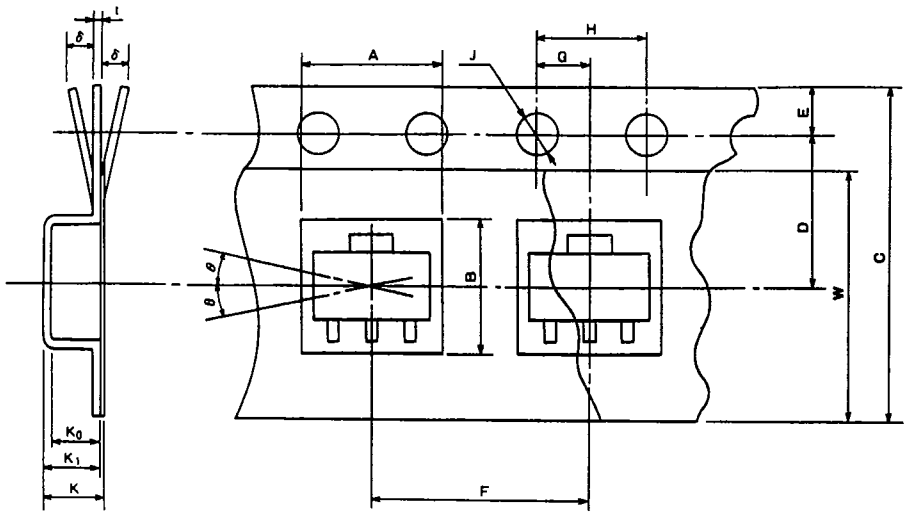

SOT-89 Package

Thyristor
CR08AS

Taping dimensions

Description of symbol		Symbol	Dimensions/angles Unit:mm	Remark
Parts insertion Concave square hole	Height	A	$5.0 \pm^{0.1}_{0.1}$	Cross-section of the surface 0.5mm above the inner bottom
	Width	B	$4.6 \pm^{0.1}_{0.1}$	Cross-section of the surface 0.5mm above the inner bottom
	Depth	K_0	1.8 ± 0.1	Inner space
	Pitch	F	8.0 ± 0.1	Cumulative error +0.1/–0.3 MAX/10 pitches
Round feed hole	Diameter	J	$\phi 1.5 \pm^{0.1}_{0.05}$	
	Pitch	H	4.0 ± 0.1	Cumulative error +0.1/–0.3 MAX/10 pitches
	Position	E	1.5 ± 0.1	Distance between the tape edge and the hole center
Distance between center lines	Vertical	G	2.0 ± 0.5	Center line of concave square hole and round feed hole
	Horizontal	D	5.65 ± 0.05	Center line of concave square hole and round feed hole
Cover tape	Width	W	9.5+0.3/–0	Thickness: 0.1 MAX
Carrier tape	Width	C	12 ± 0.2	Warp δ0.3 MAX
	Thickness	t	0.3 ± 0.05	
	Package hole depth	K_1	2.1 ± 0.1	
Device	Package dimensions	—	—	As shown in (e)
	Inclination	θ	30° MAX.	
Total Thickness		K	2.3 ± 0.1	Total thickness including cover and carrier tapes