M5L8216P / M5L8226P

T-52-09

MITSUBISHI(MICMPTR/MIPRC)

4-BIT PARALLEL BIDIRECTIONAL BUS DRIVERS

DESCRIPTION

The M5L8216P and M5L8226P are 4-bit bidirectional bus drivers and suitable for the 8-bit parallel CPU M5L8085AP.

FEATURES

- Parallel 8-bit data bus buffer driver
- Low input current $\overline{DIEN}$, $\overline{CS}$: $I_{IL}=-500\mu A$(max.)
  DI, DB: $I_{IL}=-250\mu A$(max.)
- High output current M5L8216P
  DB: $I_{OL}=55mA$(max.)
  $I_{OH}=-10mA$(max.)
  DO: $I_{OH}=-1mA$(max.)
  M5L8226P
  DB: $I_{OL}=50mA$(max.)
  $I_{OH}=-10mA$(max.)
  DO: $I_{OH}=-1mA$(max.)
- Outputs can be connected with the CPU M5L8085AP: $V_{OH}=3.65V$(min.)
- Three-state output

APPLICATION

Bidirectional bus driver/receiver for various types of microcomputer systems.

PIN CONFIGURATION (TOP VIEW)

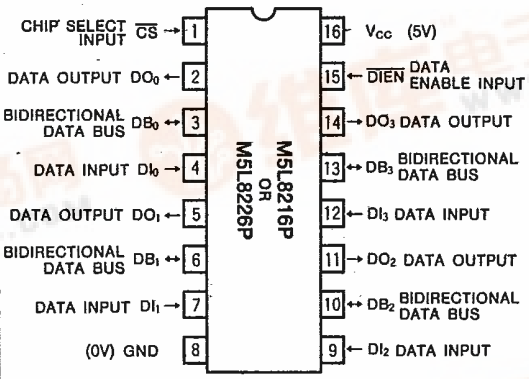

Outline 16P4

FUNCTION

The M5L8216P is a non-inverting and the M5L8226P is an inverting 4-bit bidirectional bus driver.

When the terminal $\overline{CS}$ is high-level, all outputs are in high-impedance state, and when low-level, the direction of the bidirectional bus can be controlled by the terminal $\overline{DIEN}$.

The terminal $\overline{DIEN}$ controls the data flow. The data flow control is performed by placing one of a pair of buffers in high-impedance state and allowing the other to transfer the data.

BLOCK DIAGRAM

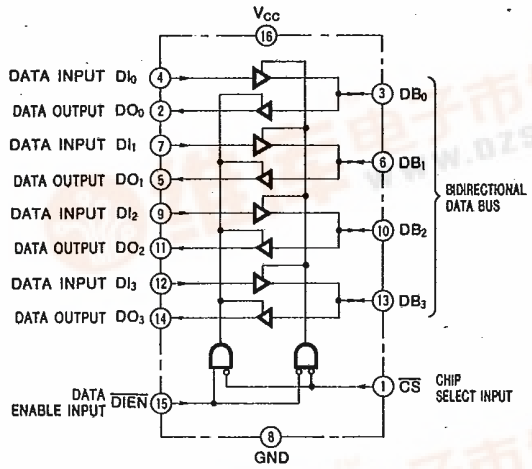

M5L8216P

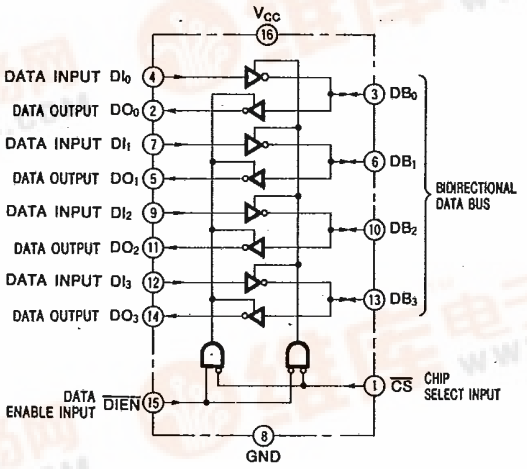

M5L8226P

MITSUBISHI ELECTRIC

ABSOLUTE MAXIMUM RATINGS (T_a=0~75℃, unless otherwise noted)

Symbol	Parameter	Conditions	Ratings	Unit
V_{CC}	Supply voltage	With respect to GND	7	V
V_I	Input voltage, $\overline{CS}$, $\overline{DIEN}$, DI inputs		5.5	V
V_I	Input voltage, DB input		V_{CC}	V
V_O	High-level output voltage		V_{CC}	V
P_d	Power dissipation	T_a=25℃	700	mW
T_{opr}	Operating free-air temperature range		0~75	℃
T_{stg}	Storage temperature range		−65~+150	℃

RECOMMENDED OPERATING CONDITONS (T_a=0~75℃, unless otherwise noted)

Symbol	Parameter	Limits			Unit
		Min	Nom	Max	
V_{CC}	Supply voltage	4.75	5	5.25	V
I_{OH}	High-level output current, DO output			−1	mA
I_{OH}	High-level output current, DB output			−10	mA
I_{OL}	Low-level output current, DO output			15	mA
I_{OL}	Low-level output current, DB output			25	mA

ELECTRICAL CHARACTERISTICS (T_a=0~75℃, unless otherwise noted)

Symbol	Parameter		Conditions		Limits			Unit
					Min	Typ	Max	
V_{IH}	High-level input voltage				2			V
V_{IL}	Low-level input voltage						0.95	V
V_{IC}	Input clamp voltage		V_{CC}=4.75V, I_{IC}=−5mA				−1	V
V_{OH}	High-level output voltage, DO output		V_{CC}=4.75V, V_{IH}=2V, V_{IL}=0.95V	I_{OH}=−1mA	3.65			V
V_{OH}	High-level output voltage, DB output			I_{OH}=−10mA	2.4			V
V_{OL1}	Low-level output voltage, DO output			I_{OL}=15mA			0.45	V
V_{OL1}	Low-level output voltage, DB output			I_{OL}=25mA			0.45	V
V_{OL2}	Low-level output voltage, DB output	M5L8216P		I_{OL}=55mA			0.6	V
		M5L8226P		I_{OL}=50mA			0.6	
I_{OZH}	Off-state output current, DO output		V_{CC}=5.25V	V_O=5.25V			20	μA
I_{OZH}	Off-state output current, DB output						100	μA
I_{OZL}	Off-state output current, DO output			V_O=0.45V			−20	μA
I_{OZL}	Off-state output current, DB output						−100	μA
I_{IH}	High-level input current, $\overline{DIEN}$, $\overline{CS}$ inputs		V_{CC}=5.25V, V_{IH}=4.5V				20	μA
I_{IH}	High-level input current, DI, DB inputs						10	μA
I_{IL}	Low-level input current, $\overline{DIEN}$ $\overline{CS}$ inputs		V_{CC}=5.25V, V_{IH}=4.5V				−500	μA
I_{IL}	Low-level input current, DI, DB input						−250	μA
I_{OS}	Short-circuit output DO output (Note 2)		V_{CC}=5.25V, V_O=0V		−15		−65	mA
I_{OS}	Short-circuit output, DB output (Note 2)				−30		−120	mA
I_{CC}	Supply current	M5L8216P	V_{CC}=5.25V				100	mA
		M5L8226P					100	
I_{CCZ}	Supply current z	M5L8216P					120	mA
		M5L8226P					100	

Note 1 : Current flowing into an IC is postive, out is negative.
2 : All measurements should be done quickly, and not more than one output should be shorted at a time.

SWITCHING CHARACTERISTICS (V_{CC}=5V±5%, T_a=25℃, unless otherwise noted)

Symbol	Parameter		Test conditions (Note 3)	Limits Min	Limits Typ	Limits Max	Unit
$t_{PHL(DB-DO)}$ $t_{PLH(DB-DO)}$	High-to-low and low-to-high output propagation time. from input DB to output DO		C_L=30pF, R_{L1}=300Ω, R_{L2}=600Ω			25	ns
$t_{PHL(DI-DB)}$ $t_{PLH(DI-DB)}$	High-to-low and low-to-high output propagation time. from input DI to output DB	M5L8216P	C_L=300pF, R_{L1}=90Ω, R_{L2}=180Ω			30	ns
		M5L8226P				25	
$t_{PHZ(\overline{CS}-DO)}$	High-to-Z and low-to-Z output propagation time. from inputs $\overline{DIEN}$. $\overline{CS}$. to output DO		C_L=5pF, R_{L1}=10kΩ, R_{L2}=1kΩ			35	ns
$t_{PLZ(\overline{CS}-DO)}$			C_L=5pF, R_{L1}=300Ω, R_{L2}=600Ω				
$t_{PZH(\overline{CS}-DO)}$	Output enable time. from inputs $\overline{DIEN}$. $\overline{CS}$ to output DO	M5L8216P	C_L=30pF, R_{L1}=10kΩ, R_{L2}=1kΩ			65	ns
		M5L8226P				54	
$t_{PZL(\overline{CS}-DO)}$		M5L8216P	C_L=30pF, R_{L1}=300Ω, R_{L2}=600Ω			65	ns
		M5L8226P				54	
$t_{PHZ(\overline{CS}-DB)}$	Output disable time. from inputs $\overline{DIEN}$. $\overline{CS}$. to output DB		C_L=5pF, R_{L1}=10kΩ, R_{L2}=1kΩ			35	ns
$t_{PLZ(\overline{CS}-DB)}$			C_L=5pF, R_{L1}=90Ω, R_{L2}=180Ω				
$t_{PZH(\overline{CS}-DB)}$	Output enable time. from inputs $\overline{DIEN}$. $\overline{CS}$. to output DB	M5L8216P	C_L=300pF, R_{L1}=10kΩ, R_{L2}=1kΩ			65	ns
		M5L8226P				54	
$t_{PZL(\overline{CS}-DB)}$		M5L8216P	C_L=300pF, R_{L1}=90Ω, R_{L2}=180Ω			65	ns
		M5L8226P				54	

TIMING DIAGRAM (Reference level=1.5V)

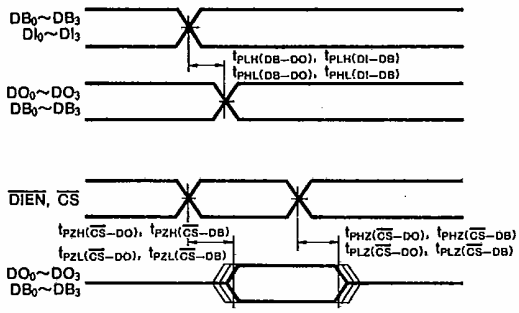

Note 3 : Test circuit

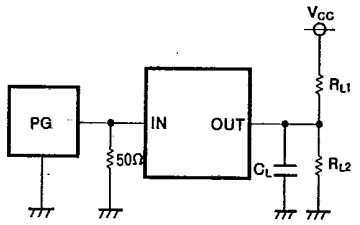

APPLICATION EXAMPLES

Fig. 1 shows a pair of M5L8216Ps or M5L8226Ps which are directly connected with the 8080A CPU data bus, and their control signal. Fig. 2 shows an example circuit in which the M5L8216P or M5L8226P is used as an interface for memory and I/O to a bidirectional bus.

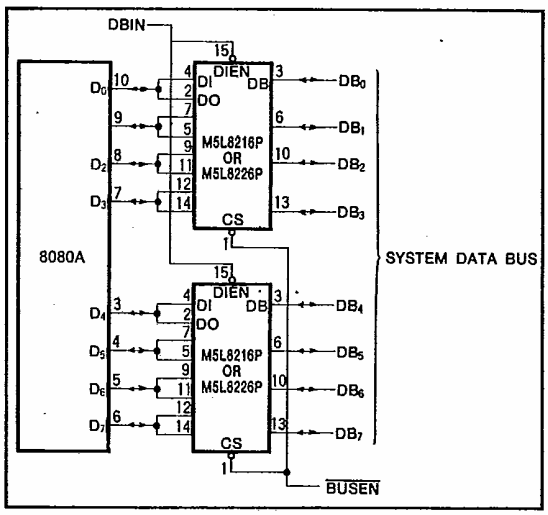

Fig. 1 Data bus buffer

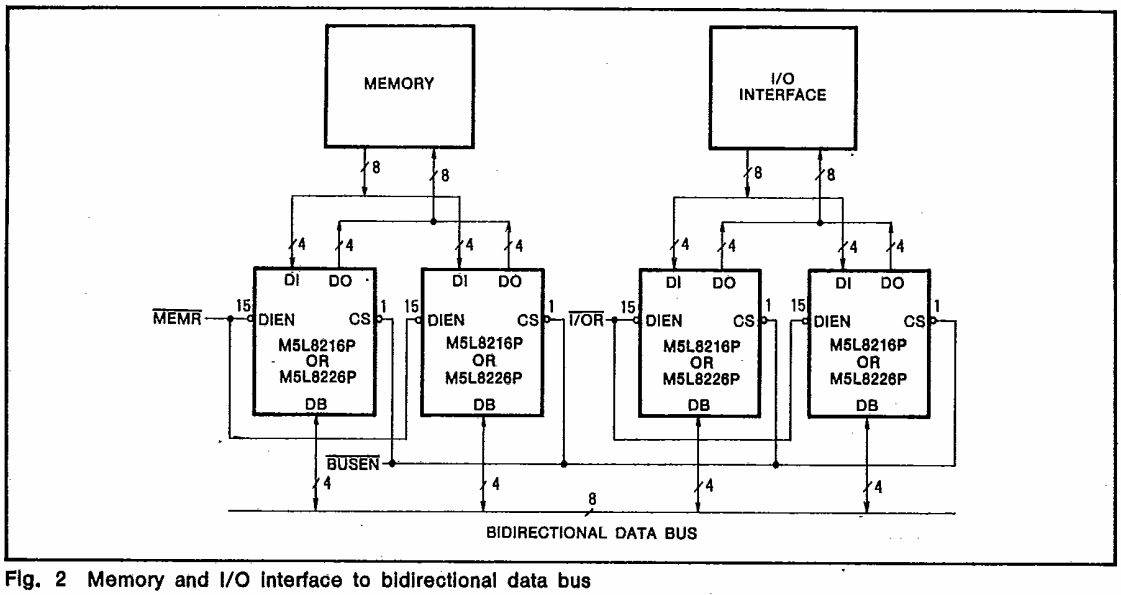

Fig. 2 Memory and I/O interface to bidirectional data bus

PRECAUTIONS FOR USE

When the M5L8216P data input or two-way data bus is set to high to disable-output from the two-way bus or data output, care is required as a low glitch of approximate width 10ns will be generated.