www.DataSheet4U.com

SEAWARD ELECTRONICS

Motor Control Circuit (Preliminary)

SE6651

Description

The SE6651 is an IC designed for the rotating speed control of a compact DC motor, which is used for tape recorder, record player, etc.

Pin Configuration

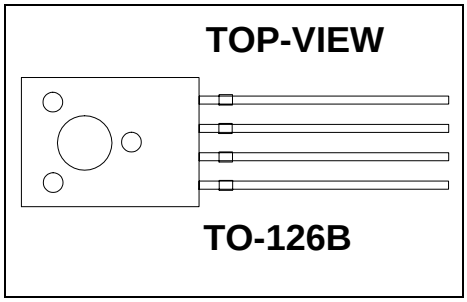

Pin Description

Pin No.	Pin Name
1	VCC
2	Control Pin
3	GND
4	Motor Pin

Block Diagram

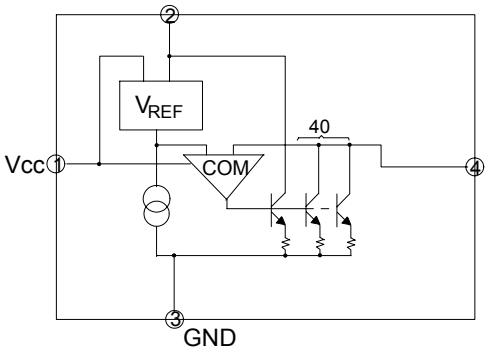

Feature

- Small four-lead plastic package for compact motor.
- Fewer external parts.
- Stable low reference voltage (1.0V typical), wide motor speed setting.
- Highly stable operation over a wide range of supply voltage and torque supply voltage, VCC = 3.5V – 14.4V.
- Built-in reverse voltage protection.

Typical Application

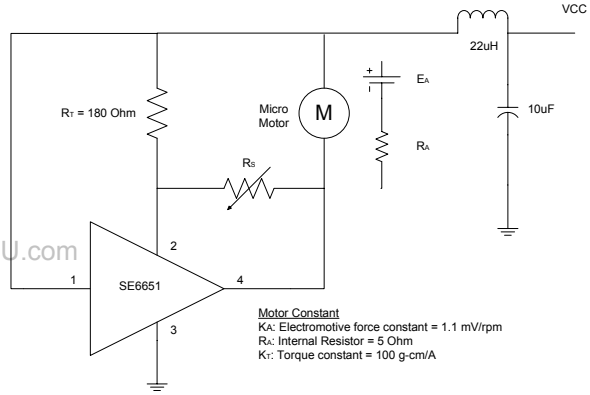

DataSheet4U.com

DataSheet4U.com

www.DataSheet4U.com

DataSheet4U.com

www.DataSheet4U.com

Absolute Maximum Rating

Parameter	Symbol	Maximum	Unit
Supply Voltage	V_{CC}	14.4	V
Supply Current	I_{CC}[2]	2000	mA
Power Dissipation	P_D[1]	1300	mW
Operating Ambient Temperature	T_A	-20 ~ +75	°C
Storage Temperature	T_{STG}	-40 ~ +150	°C

Electrical Characteristics

Parameter	Symbol	Condition	Min	Typ.	Max	Unit
Reference Voltage	V_{REF}	V_{CC} = 6V, R_A = 1KΩ		1.02		V
Bias Current	I_{BIAS}	V_{CC} = 6V		0.484		mA
Current Proportional Constance	K	V_{CC} = 6V, DI_4 = 40mA		41.53		
Line Regulation	$\frac{\Delta V_{REF}}{V_{REF}} / V_{CC}$	V_{CC} = 3.5V ~ 14V, R_A = 1KΩ		0.13		%/V
Load Regulation	$\frac{\Delta V_{REF}}{V_{REF}} / I_4$	I_4 = 50mA ~ 200mA		0.04		%/mA
Saturation Voltage	V_{SAT}	V_{CC} = 4.2V, R_A = 5.0		1.54		V
Voltage Characteristics	$\frac{\Delta K}{K} / V_{CC}$	V_{CC} = 3.5V ~ 14V, DI_4 = 40mA		0.68		%/V
Current Characteristics	$\frac{\Delta K}{K} / I_4$	I_4 = 50mA ~ 200mA		-0.008		%/mA
Temperature Characteristics	$\frac{\Delta V_{REF}}{V_{REF}} / T_A$	T_A = -20°C ~ 75°C, V_{CC} = 6V, R_A = 1KΩ		0.05		%/°C
Temperature Characteristics	$\frac{\Delta K}{K} / T_A$	T_A = -20°C ~ 75°C, DI_4 = 40mA		0.001		%/°C

DataSheet4U.com

© Seaward Electronics, Inc., 2004. • www.seawardinc.com

DataSheet4U.com

www.DataSheet4U.com

Outline Drawing for TO-126B

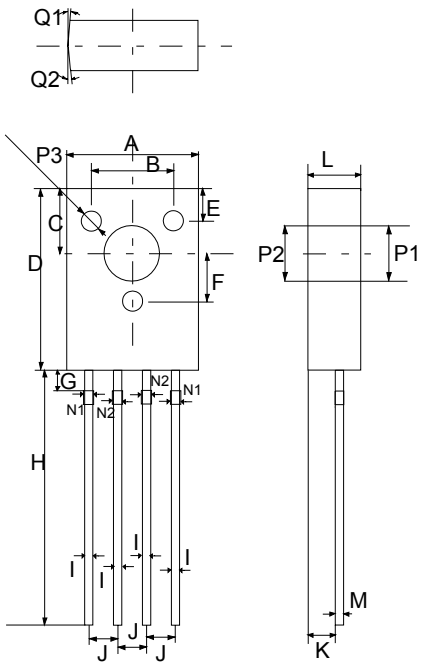

TO-126B

DIMENSIONS				
DIM[N]	INCHES		MM	
	MIN	MAX	MIN	MAX
A	0.312	0.328	7.800	8.200
B	0.196	0.204	4.900	5.100
C	0.156	0.164	3.900	4.100
D	0.432	0.448	10.800	11.200
E	0.076	0.084	1.900	2.100
F	0.116	0.124	2.900	3.100
G	0.046	0.054	1.155	1.355
H	0.560	0.640	14.000	16.000
I	0.024	0.024	0.600	0.600
J	0.071	0.071	1.778	1.778
K	0.066	0.070	1.650	1.750
L	0.124	0.132	3.100	3.300
M	0.019	0.021	0.485	0.515
N1	0.028	0.028	0.700	0.700
N2	0.024	0.024	0.600	0.600
P1	0.128	0.128	3.200	3.200
P2	0.122	0.122	3.050	3.050
Q1	3°		3°	
Q2	4°		4°	

DataSheet4U.com

DataSheet4U.com

www.DataSheet4U.com

© Seaward Electronics, Inc., 2004. • www.seawardinc.com

DataSheet4U.com

www.DataSheet4U.com

et4U.com DataSheet4U.com

Contact Information

Seaward Electronics Incorporated – China

Rm 1605, Building 1, International Pioneering Park, #1 Shangdi Xinxi Rd

Haidian District, Beijing 100085, China

Tel: 86-10-8289-5700/01/05

Fax: 86-10-8289-5706

Email: sales@seawardinc.com.cn

Seaward Electronics Corporation – Taiwan

2F, #181, Sec. 3, Minquan East Rd,

Taipei, Taiwan R.O.C

Tel: 886-2-2712-0307

Fax: 886-2-2712-0191

Email: sales@seawardinc.com.tw

Seaward Electronics Incorporated – North America

49 Showers Dr. J126

Mountain View, CA 94040, USA

Tel: 1-650-941-5725

Last Updated - 9/27/2004

DataSheet4U.com www.DataSheet4U.com

© Seaward Electronics, Inc., 2004. • www.seawardinc.com

DataSheet4U.com