查询OB2358供应商 捷多邦，专业PCB打样工厂，24小时加急出货

On-Bright
Brighten Your Life

OB2358
Current Mode PWM Power Switch
Freq Shuffling

GENERAL DESCRIPTION

OB2358 combines a dedicated current mode PWM controller with a high voltage power MOSFET. It is optimized for high performance, low standby power, and cost effective off-line flyback converter applications in sub 27W range.

OB2358 offers complete protection coverage with automatic self-recovery feature including Cycle-by-Cycle current limiting (OCP), over load protection (OLP), VDD over voltage clamp and under voltage lockout (UVLO). Excellent EMI performance is achieved with On-Bright proprietary frequency shuffling technique together with soft switching control at the totem pole gate drive output.

The tone energy at below 20KHZ is minimized in the design and audio noise is eliminated during operation.

OB2358 is offered in DIP8 package.

FEATURES

- Power on Soft Start Reducing MOSFET Vds Stress
- Frequency shuffling for EMI
- Extended Burst Mode Control For Improved Efficiency and Minimum Standby Power Design
- Audio Noise Free Operation
- Fixed 50KHZ Switching Frequency
- Internal Synchronized Slope Compensation
- Low VDD Startup Current and Low Operating Current
- Leading Edge Blanking on Current Sense Input
- Good Protection Coverage With Auto Self-Recovery
  - VDD Over Voltage Clamp and Under Voltage Lockout with Hysteresis (UVLO)
  - On-Bright Proprietary Line Input Compensated Cycle-by-Cycle Over-current Threshold Setting For Constant Output Power Limiting Over Universal Input Voltage Range.
  - Overload Protection (OLP).
  - Over voltage Protection(OVP)

APPLICATIONS

Offline AC/DC flyback converter for

- AC/DC adaptor
- PDA power supplies
- Digital Cameras and Camcorder Adaptor
- VCR, SVR, STB, DVD&DVCD Player SMPS
- Set-Top Box Power
- Auxiliary Power Supply for PC and Server
- Open-frame SMPS

TYPICAL APPLICATION

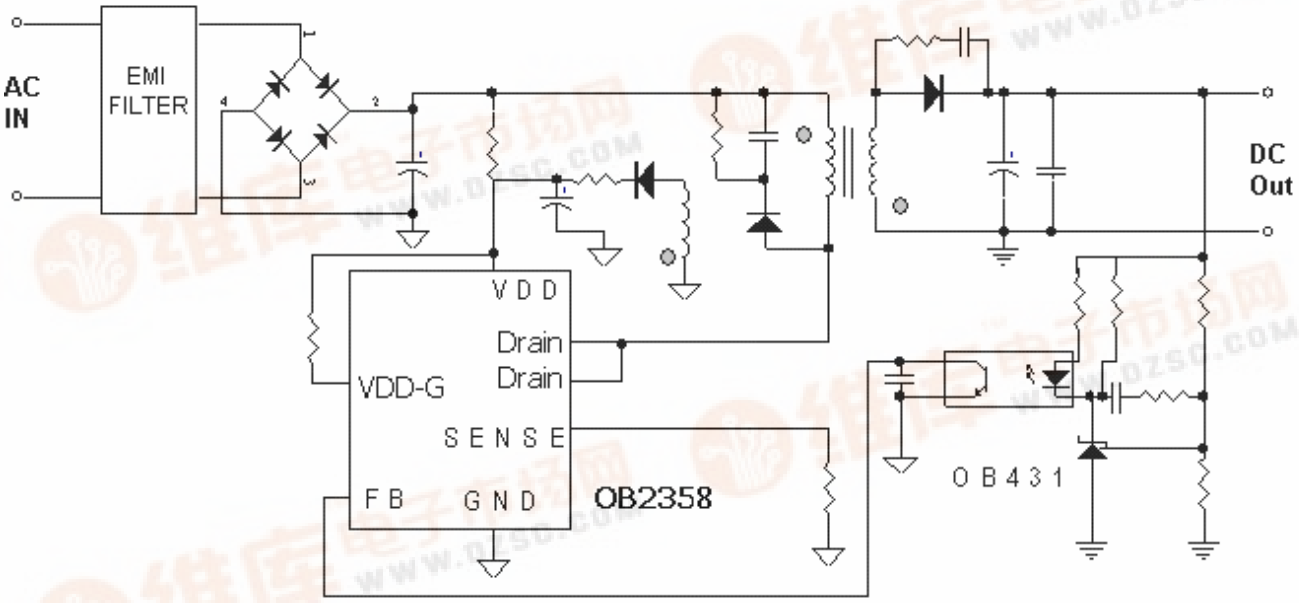

Output Power Table

Product	230VAC±15%	85-265VAC
	Open Frame[1]	Open Frame[1]
OB2358	27W	16W

Notes:

1. Maximum practical continuous power in an open frame design with sufficient drain pattern as a heat sink, at 50℃ ambient.

找PDF 搜一下 pdf.dzsc.com