STB4NB80

N - CHANNEL 800V - 3Ω - 4A - TO-220/TO-220FP PowerMESH™ MOSFET

PRELIMINARY DATA

TYPE	V_{DSS}	$R_{DS(on)}$	I_D
STB4NB80	800 V	3.3 Ω	4 A
STB4NB80FP	800 V	3.3 Ω	4 A

- TYPICAL $R_{DS(on)}$ = 3 Ω
- EXTREMELY HIGH dv/dt CAPABILITY
- 100% AVALANCHE TESTED
- VERY LOW INTRINSIC CAPACITANCES
- GATE CHARGE MINIMIZED

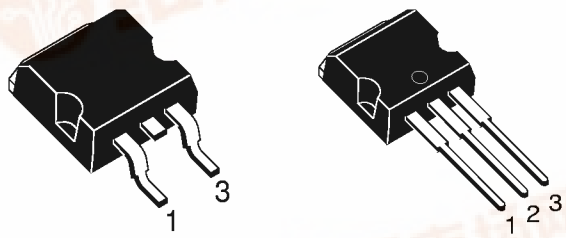

D²PAK TO-263 (Suffix "T4")

I²PAK TO-262 (Suffix "-1")

DESCRIPTION

Using the latest high voltage MESH OVERLAY™ process, SGS-Thomson has designed an advanced family of power MOSFETs with outstanding performances. The new patent pending strip layout coupled with the Company's proprietary edge termination structure, gives the lowest RDS(on) per area, exceptional avalanche and dv/dt capabilities and unrivalled gate charge and switching characteristics.

INTERNAL SCHEMATIC DIAGRAM

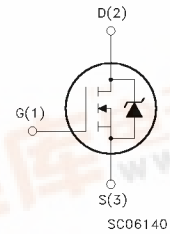

APPLICATIONS

- HIGH CURRENT, HIGH SPEED SWITCHING
- SWITCH MODE POWER SUPPLIES (SMPS)
- DC-AC CONVERTERS FOR WELDING EQUIPMENT AND UNINTERRUPTIBLE POWER SUPPLIES AND MOTOR DRIVE

ABSOLUTE MAXIMUM RATINGS

Symbol	Parameter	Value		Unit
		STB4NB80	STB4NB80FP	
V_{DS}	Drain-source Voltage (V_{GS} = 0)	800		V
V_{DGR}	Drain- gate Voltage (R_{GS} = 20 kΩ)	800		V
V_{GS}	Gate-source Voltage	± 30		V
I_D	Drain Current (continuous) at T_c = 25 °C	4	4(*)	A
I_D	Drain Current (continuous) at T_c = 100 °C	2.4	2.4(*)	A
I_{DM}(•)	Drain Current (pulsed)	16	16	A
P_{tot}	Total Dissipation at T_c = 25 °C	100	35	W
	Derating Factor	1	0.28	W/°C
dv/dt(1)	Peak Diode Recovery voltage slope	4.5	4.5	V/ns
V_{ISO}	Insulation Withstand Voltage (DC)	—	2000	V
T_{stg}	Storage Temperature	-65 to 150		°C
T_j	Max. Operating Junction Temperature	150		°C

(•) Pulse width limited by safe operating area
(*) Limited only by maximum temperature allowed
(1) I_{SD} ≤4 A, di/dt ≤ 200 A/µs, V_{DD} ≤ $V_{(BR)DSS}$, Tj ≤ T_{JMAX}

THERMAL DATA

		TO-263	TO-262	
$R_{thj-case}$	Thermal Resistance Junction-case Max	1	3.6	°C/W
$R_{thj-amb}$ $R_{thc-sink}$ T_l	Thermal Resistance Junction-ambient Max Thermal Resistance Case-sink Typ Maximum Lead Temperature For Soldering Purpose	62.5 0.5 300		°C/W °C/W °C

AVALANCHE CHARACTERISTICS

Symbol	Parameter	Max Value	Unit
I_{AR}	Avalanche Current, Repetitive or Not-Repetitive (pulse width limited by T_j max)	4	A
E_{AS}	Single Pulse Avalanche Energy (starting T_j = 25 °C, I_D = I_{AR}, V_{DD} = 50 V)	230	mJ

ELECTRICAL CHARACTERISTICS (T_{case} = 25 °C unless otherwise specified)

OFF

Symbol	Parameter	Test Conditions	Min.	Typ.	Max.	Unit
$V_{(BR)DSS}$	Drain-source Breakdown Voltage	I_D = 250 µA V_{GS} = 0	800			V
I_{DSS}	Zero Gate Voltage Drain Current (V_{GS} = 0)	V_{DS} = Max Rating V_{DS} = Max Rating T_c = 125 °C			1 50	µA µA
I_{GSS}	Gate-body Leakage Current (V_{DS} = 0)	V_{GS} = ± 30 V			± 100	nA

ON (*)

Symbol	Parameter	Test Conditions	Min.	Typ.	Max.	Unit
$V_{GS(th)}$	Gate Threshold Voltage	V_{DS} = V_{GS} I_D = 250 µA	3	4	5	V
$R_{DS(on)}$	Static Drain-source On Resistance	V_{GS} = 10V I_D = 2 A		3	3.3	Ω
$I_{D(on)}$	On State Drain Current	V_{DS} > $I_{D(on)}$ x $R_{DS(on)max}$ V_{GS} = 10 V	4			A

DYNAMIC

Symbol	Parameter	Test Conditions	Min.	Typ.	Max.	Unit
g_{fs} (*)	Forward Transconductance	V_{DS} > $I_{D(on)}$ x $R_{DS(on)max}$ I_D = 2 A	1.8			S
C_{iss} C_{oss} C_{rss}	Input Capacitance Output Capacitance Reverse Transfer Capacitance	V_{DS} = 25 V f = 1 MHz V_{GS} = 0		700 95 9	920 126 12	pF pF pF

ELECTRICAL CHARACTERISTICS (continued)

SWITCHING ON

Symbol	Parameter	Test Conditions	Min.	Typ.	Max.	Unit
$t_{d(on)}$ t_r	Turn-on Time Rise Time	V_{DD} = 400 V I_D = 2 A R_G = 4.7 Ω V_{GS} = 10 V		14 8	20 12	ns ns
Q_g Q_{gs} Q_{gd}	Total Gate Charge Gate-Source Charge Gate-Drain Charge	V_{DD} = 640 V I_D = 4 A V_{GS} = 10 V		21 7 9	29	nC nC nC

SWITCHING OFF

Symbol	Parameter	Test Conditions	Min.	Typ.	Max.	Unit
$t_{r(Voff)}$ t_f t_c	Off-voltage Rise Time Fall Time Cross-over Time	V_{DD} = 640V I_D = 4 A R_G = 4.7 Ω V_{GS} = 10 V		12 9 16	17 13 22	ns ns ns

SOURCE DRAIN DIODE

Symbol	Parameter	Test Conditions	Min.	Typ.	Max.	Unit
I_{SD} I_{SDM}(•)	Source-drain Current Source-drain Current (pulsed)				4 16	A A
V_{SD} (*)	Forward On Voltage	I_{SD} =4 A V_{GS} = 0			1.6	V
t_{rr} Q_{rr} I_{RRM}	Reverse Recovery Time Reverse Recovery Charge Reverse Recovery Current	I_{SD} = 4 A di/dt = 100 A/µs V_{DD} = 100 V T_j = 150 °C		600 3.3 11		ns µC A

(*) Pulsed: Pulse duration = 300 µs, duty cycle 1.5 %
(•) Pulse width limited by safe operating area

TO-263 (D^2PAK) MECHANICAL DATA

DIM.	mm			inch		
	MIN.	TYP.	MAX.	MIN.	TYP.	MAX.
A	4.3		4.6	0.169		0.181
A1	2.49		2.69	0.098		0.106
B	0.7		0.93	0.027		0.036
B2	1.25		1.4	0.049		0.055
C	0.45		0.6	0.017		0.023
C2	1.21		1.36	0.047		0.053
D	8.95		9.35	0.352		0.368
E	10		10.28	0.393		0.404
G	4.88		5.28	0.192		0.208
L	15		15.85	0.590		0.624
L2	1.27		1.4	0.050		0.055
L3	1.4		1.75	0.055		0.068

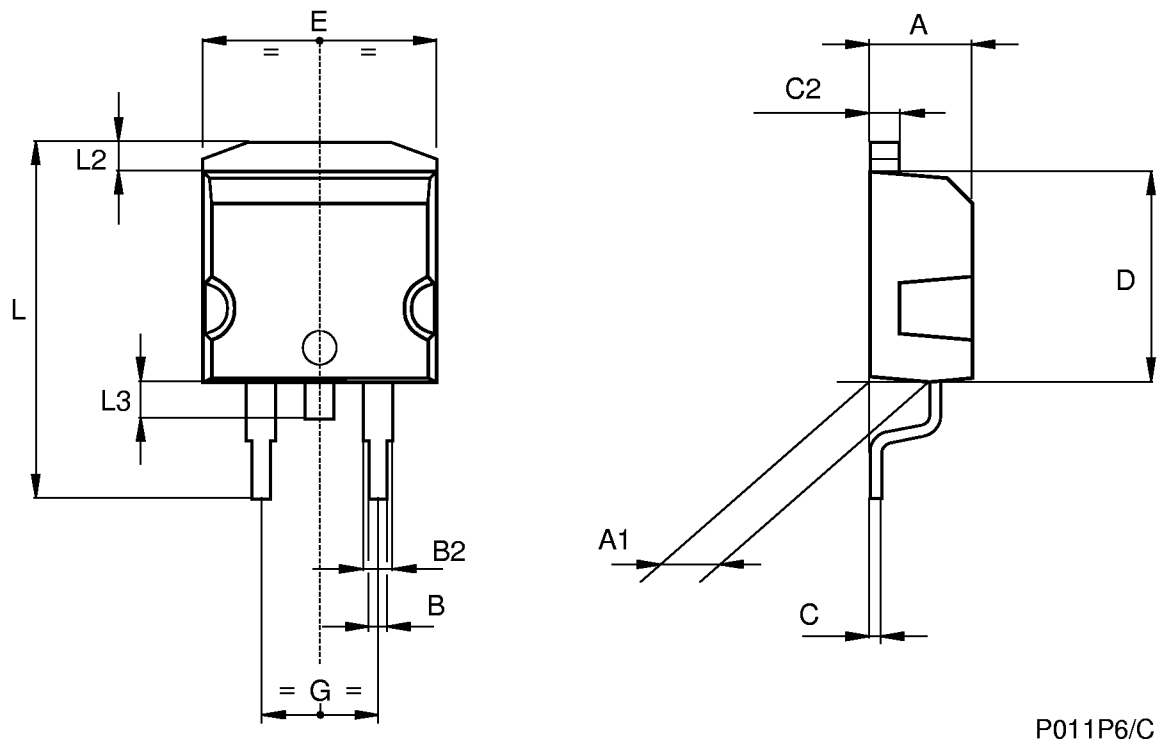

TO-262 (I2PAK) MECHANICAL DATA

DIM.	mm			inch		
	MIN.	TYP.	MAX.	MIN.	TYP.	MAX.
A	4.3		4.6	0.169		0.181
A1	2.49		2.69	0.098		0.106
B	0.7		0.93	0.027		0.036
B1	1.2		1.38	0.047		0.054
B2	1.25		1.4	0.049		0.055
C	0.45		0.6	0.017		0.023
C2	1.21		1.36	0.047		0.053
D	8.95		9.35	0.352		0.368
e	2.44		2.64	0.096		0.104
E	10		10.28	0.393		0.404
L	13.2		13.5	0.519		0.531
L1	3.48		3.78	0.137		0.149
L2	1.27		1.4	0.050		0.055

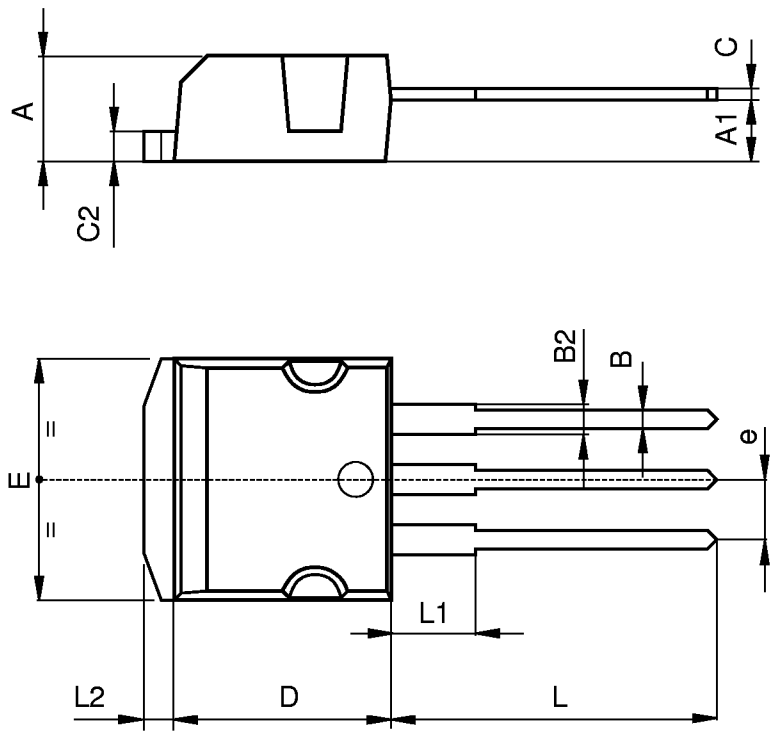

P011P5/C