查询FGB3040CS供应商 捷多邦，专业PCB打样工厂，24小时加急出货
www.DataSheet4U.com

FAIRCHILD SEMICONDUCTOR®

May 2007

FGB3040CS

EcoSPARK™ 300mJ, 400V, N-Channel Current Sensing Ignition IGBT

General Description

The FGB3040CS is an Ignition IGBT that offers outstanding SCIS capability along with a ratiometric emitter current sensing capability. This sensing is based on a emitter active area ratio of 200:1. The output is provided through a fourth (sense) lead. This signal provides a current level that is proportional to the main collector to emitter current. The effective ratio as measured on the sense lead is a function of the sense output, the collector current and the gate to emitter drive voltage.

Applications

- Smart Automotive Ignition Coil Driver Circuits
- ECU Based Systems
- Distributorless Based Systems
- Coil on Plug Based Systems

Features

- SCIS Energy = 300mJ at T_J = 25°C
- Logic Level Gate Drive

LEAD-FREE IMPLEMENTATION

Package

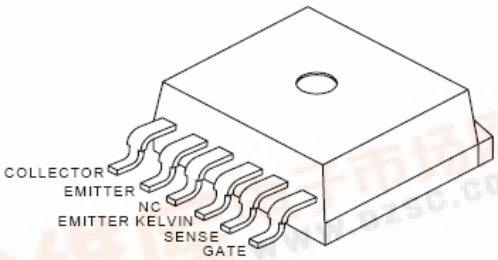

Symbol

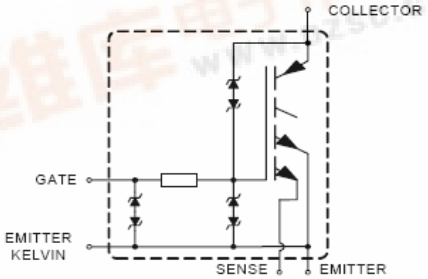

Device Maximum Ratings T_A = 25°C unless otherwise noted

Symbol	Parameter	Ratings	Units
BV_{CER}	Collector to Emitter Breakdown Voltage (I_C = 2mA)	430	V
BV_{ECS}	Emitter to Collector Breakdown Voltage (I_C = 1mA) (Reverse Battery Condition)	24	V
E_{SCIS25}	Self Clamping Inductive Switching Energy (at starting T_J = 25°C)	300	mJ
$E_{SCIS150}$	Self Clamping Inductive Switching Energy (at starting T_J = 150°C)	170	mJ
I_{C25}	Continuous Collector Current, at V_{GE} = 4.0V, T_C = 25°C	21	A
I_{C110}	Continuous Collector Current, at V_{GE} = 4.0V, T_C = 110°C	19	A
V_{GEM}	Maximum Continuous Gate to Emitter Voltage	±10	V
P_D	Power Dissipation, at T_C = 25°C	150	W
	Power Dissipation Derating, for T_C > 25°C	1	W/°C
T_J	Operating Junction Temperature Range	-40 to 175	°C
T_{STG}	Storage Junction Temperature Range	-40 to 175	°C
T_L	Max. Lead Temp. for Soldering (at 1.6mm from case for 10sec)	300	°C
T_{PKG}	Max. Package Temp. for Soldering (Package Body for 10 sec)	260	°C
ESD	Electrostatic Discharge Voltage, HBM model (100pfd, 1500 ohms)	4	kV

找PDF 维库一下 pdf.dzsc.com

Package Marking and Ordering Information

Device Marking	Device	Package	Reel Size	Tape Width	Quantity
3040CS	FGB3040CS	TO-263 6 Lead	300mm	24mm	800
3040CS	FGB3040CS	TO-263 6 Lead	Tube	N/A	50

Electrical Characteristics T_A = 25°C unless otherwise noted

Symbol	Parameter	Test Conditions		Min	Typ	Max	Units
Off State Characteristics							
BV_{CER}	Collector to Emitter Breakdown Voltage	I_{CE} = 2mA, V_{GE} = 0, R_{GE} = 1KΩ, See Fig. 17 T_J = -40 to 150°C		370	410	430	V
BV_{CES}	Collector to Emitter Breakdown Voltage	I_{CE} = 10mA, V_{GE} = 0V R_{GE} = 0, See Fig. 17 T_J = -40 to 150°C		390	430	450	V
BV_{ECS}	Emitter to Collector Breakdown Voltage	I_{CE} = -75mA, V_{GE} = 0V, T_C = 25°C		30	-	-	V
BV_{GES}	Gate to Emitter Breakdown Voltage	I_{GES} = ±2mA		±12	±14	-	V
I_{GEO}	Gate to Emitter Leakage Current	V_{GE} = ±10V		-	-	±9	μA
I_{CES}	Collector to Emitter Leakage Current	V_{CES} = 250V, See Fig. 13	T_C = 25°C	-	-	25	μA
			T_C = 150°C	-	-	1	mA
I_{ECS}	Emitter to Collector Leakage Current	V_{EC} = 24V, See Fig. 13	T_C = 25°C	-	-	1	mA
			T_C = 150°C	-	-	40	
R_1	Series Gate Resistance			-	100	-	Ω
On State Characteristics							
$V_{CE(SAT)}$	Collector to Emitter Saturation Voltage	I_{CE} = 6A, V_{GE} = 4V	T_C = 25°C See Fig. 5	-	1.3	1.6	V
$V_{CE(SAT)}$	Collector to Emitter Saturation Voltage	I_{CE} = 10A, V_{GE} = 4.5V	T_C = 150°C See Fig. 6	-	1.6	1.85	V
$V_{CE(SAT)}$	Collector to Emitter Saturation Voltage	I_{CE} = 15A, V_{GE} = 4.5V	T_C = 150°C	-	1.8	2.35	V
$I_{CE(ON)}$	Collector to Emitter On State Current	V_{CE} = 5V, V_{GE} = 5V		-	37	-	A
Dynamic Characteristics							
$Q_{G(ON)}$	Gate Charge	I_{CE} = 10A, V_{CE} = 12V, V_{GE} = 5V, See Fig. 16		-	15	-	nC
$V_{GE(TH)}$	Gate to Emitter Threshold Voltage	I_{CE} = 1mA, V_{CE} = V_{GE} See Fig. 12	T_C = 25°C	1.3	1.6	2.2	V
			T_C = 150°C	0.75	1.1	1.8	
V_{GEP}	Gate to Emitter Plateau Voltage	I_{CE} = 10A, V_{CE} = 12V		-	3.0	-	V
β_{AREA}	Emitter Sense Area Ratio	Sense Area/Total Area		-	1/200	-	-
$\beta_{5\Omega}$	Emitter Current Sense Ratio	I_{CE} = 8.0A, V_{GE} = 5V, R_{SENSE} = 5 Ω		-	230	-	-
$\beta_{20\Omega}$	Emitter Current Sense Ratio	I_{CE} = 9.0A, V_{GE} = 5V, R_{SENSE} = 20 Ω		550	640	765	-

Switching Characteristics

$t_{d(ON)R}$	Current Turn-On Delay Time-Resistive	V_{CE} = 14V, R_L = 1Ω V_{GE} = 5V, R_G = 1KΩ T_J = 25°C, See Fig. 14	-	0.6	4	μs
t_{rR}	Current Rise Time-Resistive		-	1.5	7	μs
$t_{d(OFF)L}$	Current Turn-Off Delay Time-Inductive	V_{CE} = 300V, L = 500μHy, V_{GE} = 5V, R_G = 1KΩ T_J = 25°C, See Fig. 14	-	4.7	15	μs
t_{fL}	Current Fall Time-Inductive		-	2.6	15	μs
SCIS	Self Clamped inductive Switching	T_J = 25°C, L = 3.0mHy, I_{CE} = 14.2A, R_G = 1k Ω, V_{GE} = 5V, See Fig. 3&4	-	-	300	mJ

Thermal Characteristics

$R_{\theta JC}$	Thermal Resistance Junction to Case	All Packages	-	-	1.0	°C/W

Typical Performance Curves

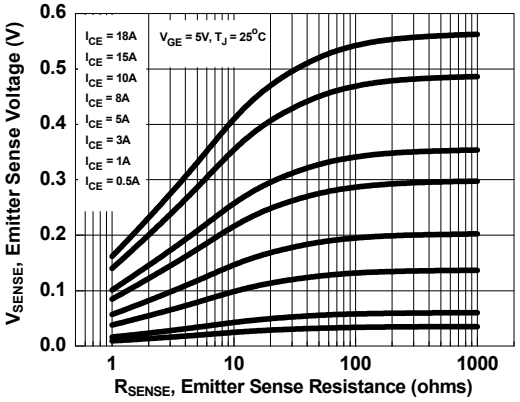

Figure 1. Emitter Sense Voltage vs. Emitter Sense Resistance

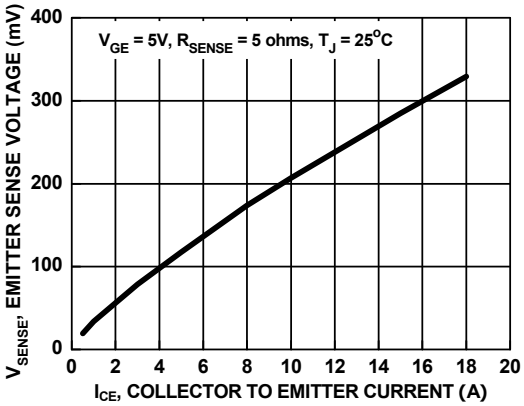

Figure 2. Emitter Sense Voltage vs. Collector to Emitter Current

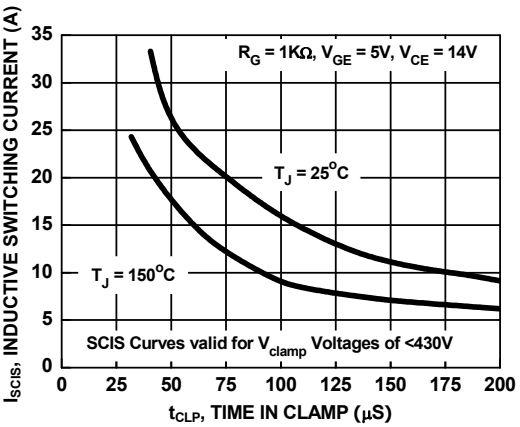

Figure 3. Self Clamped Inductive Switching Current vs. Time in Clamp

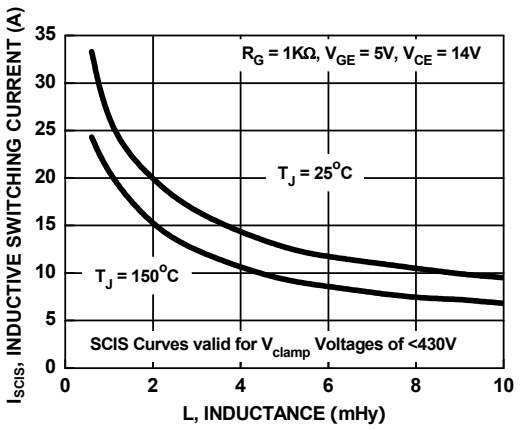

Figure 4. Self Clamped Inductive Switching Current vs. Inductance

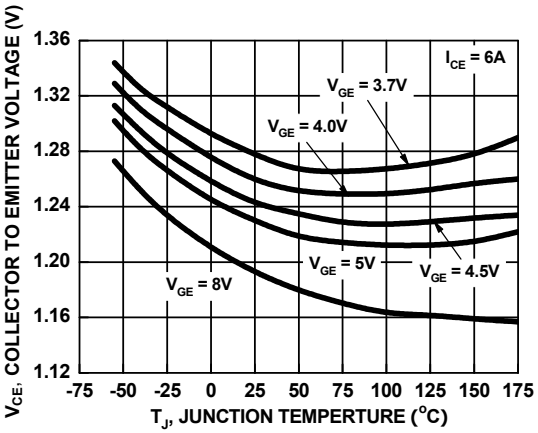

Figure 5. Collector to Emitter On-State Voltage vs. Junction Temperature

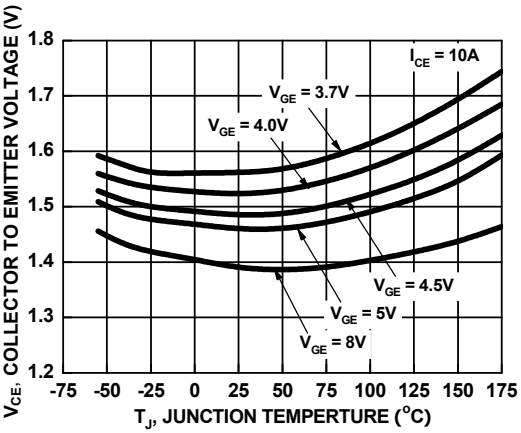

Figure 6. Collector to Emitter On-State Voltage vs. Junction Temperature

Typical Performance Curves (Continued)

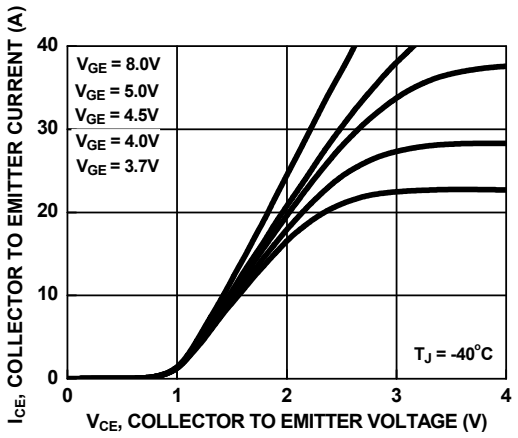

Figure 7. Collector to Emitter On-State Voltage vs. Collector Current

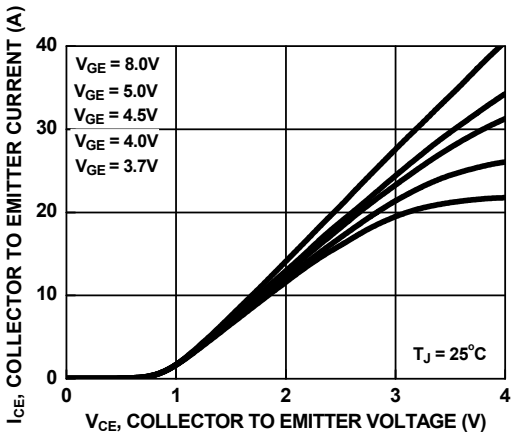

Figure 8. Collector to Emitter On-State Voltage vs. Collector Current

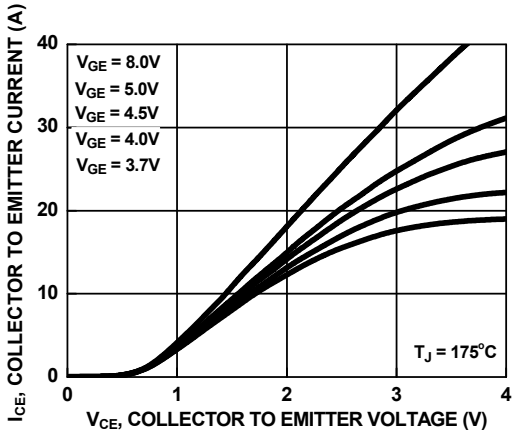

Figure 9. Collector to Emitter On-State Voltage vs. Collector Current

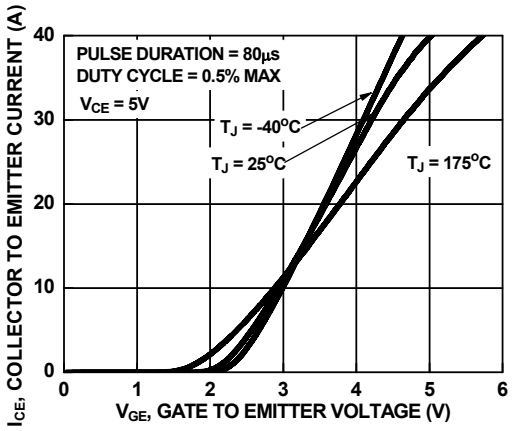

Figure 10. Transfer Characteristics

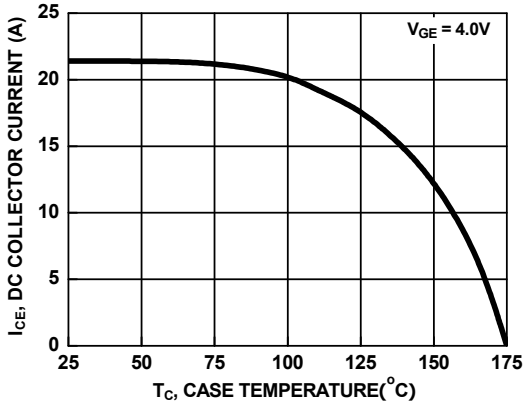

Figure 11. DC Collector Current vs. Case Temperature

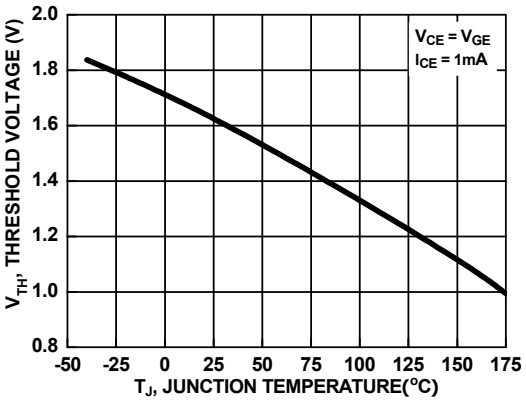

Figure 12. Threshold Voltage vs. Junction Temperature

Typical Performance Curves (Continued)

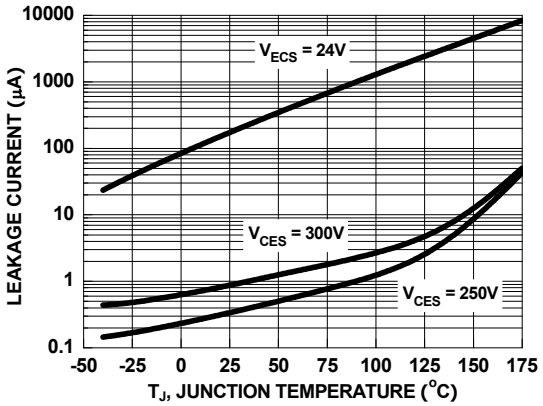

Figure 13. Leakage Current vs. Junction Temperature

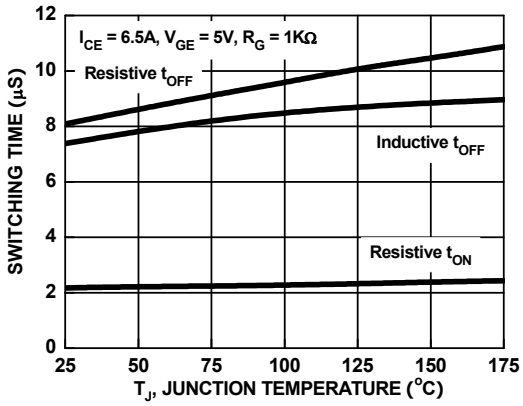

Figure 14. Switching Time vs. Junction Temperature

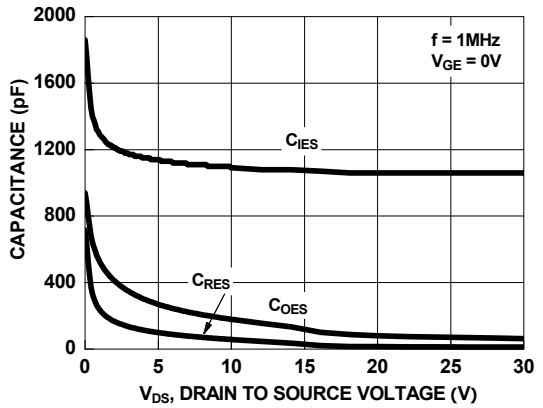

Figure 15. Capacitance vs. Collector to Emitter Voltage

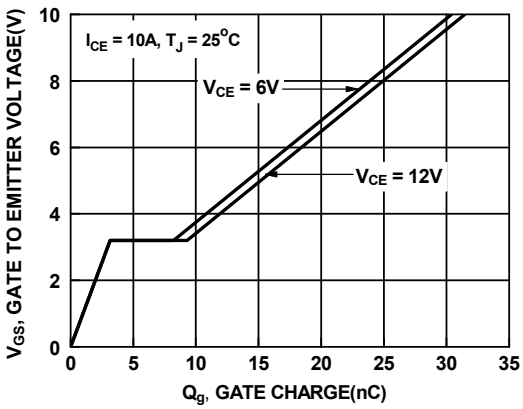

Figure 16. Gate Charge

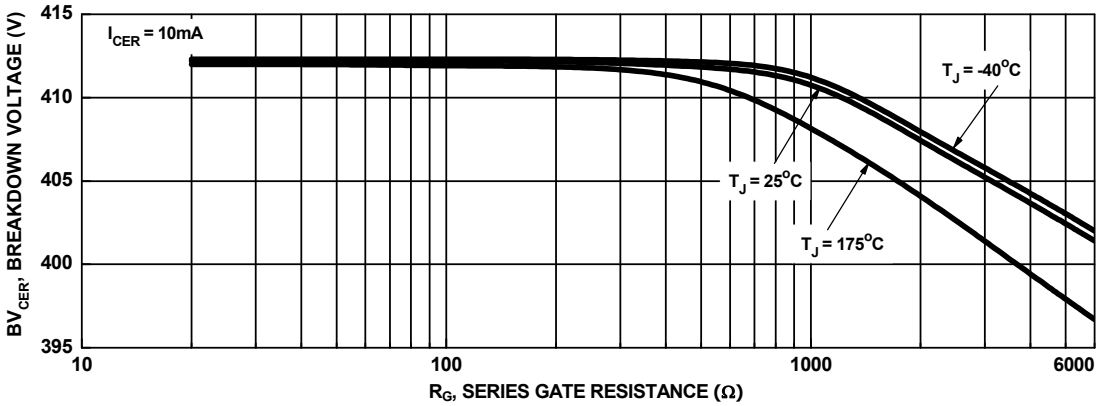

Figure 17. Break down Voltage vs. Series Gate Resistance

Typical Performance Curves

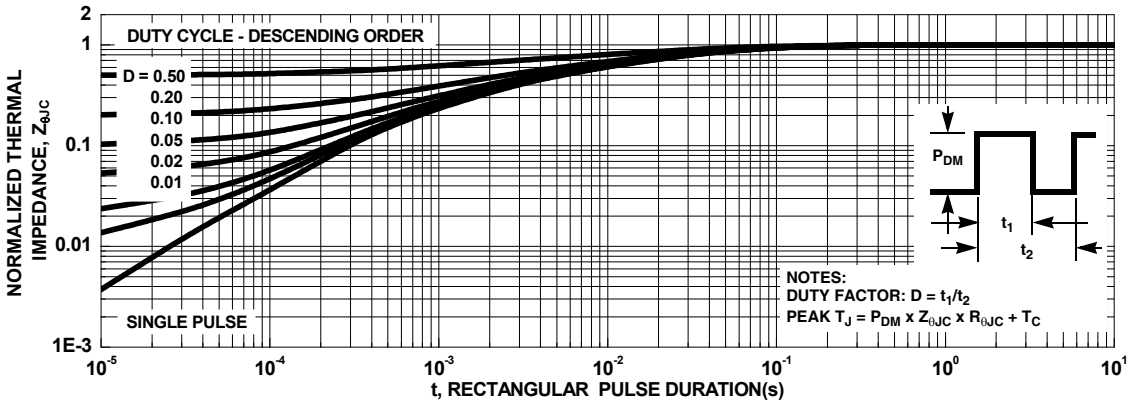

Figure 18. IGBT Normalized Transient Thermal Impedance, Junction to Case

Test Circuit and Waveforms

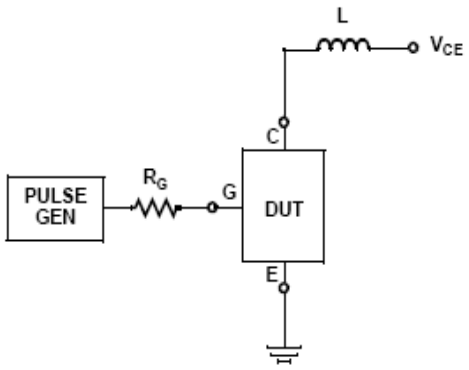

Figure 19. Inductive Switching Test Circuit

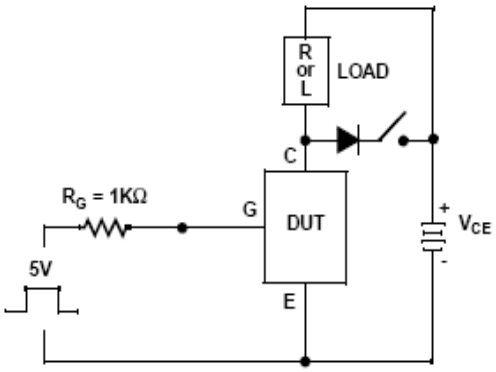

Figure 20. t_{ON} and t_{OFF} Switching Test Circuit

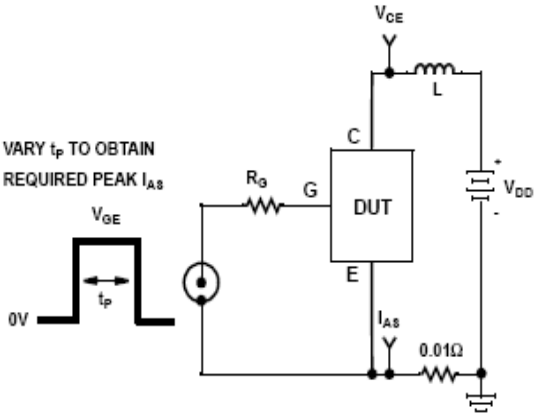

Figure 21. Energy Test Circuit

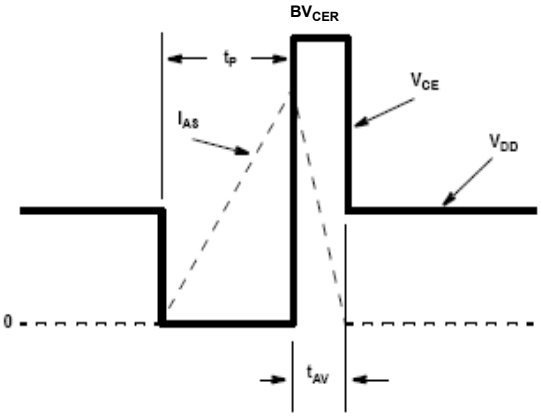

Figure 22. Energy Waveforms

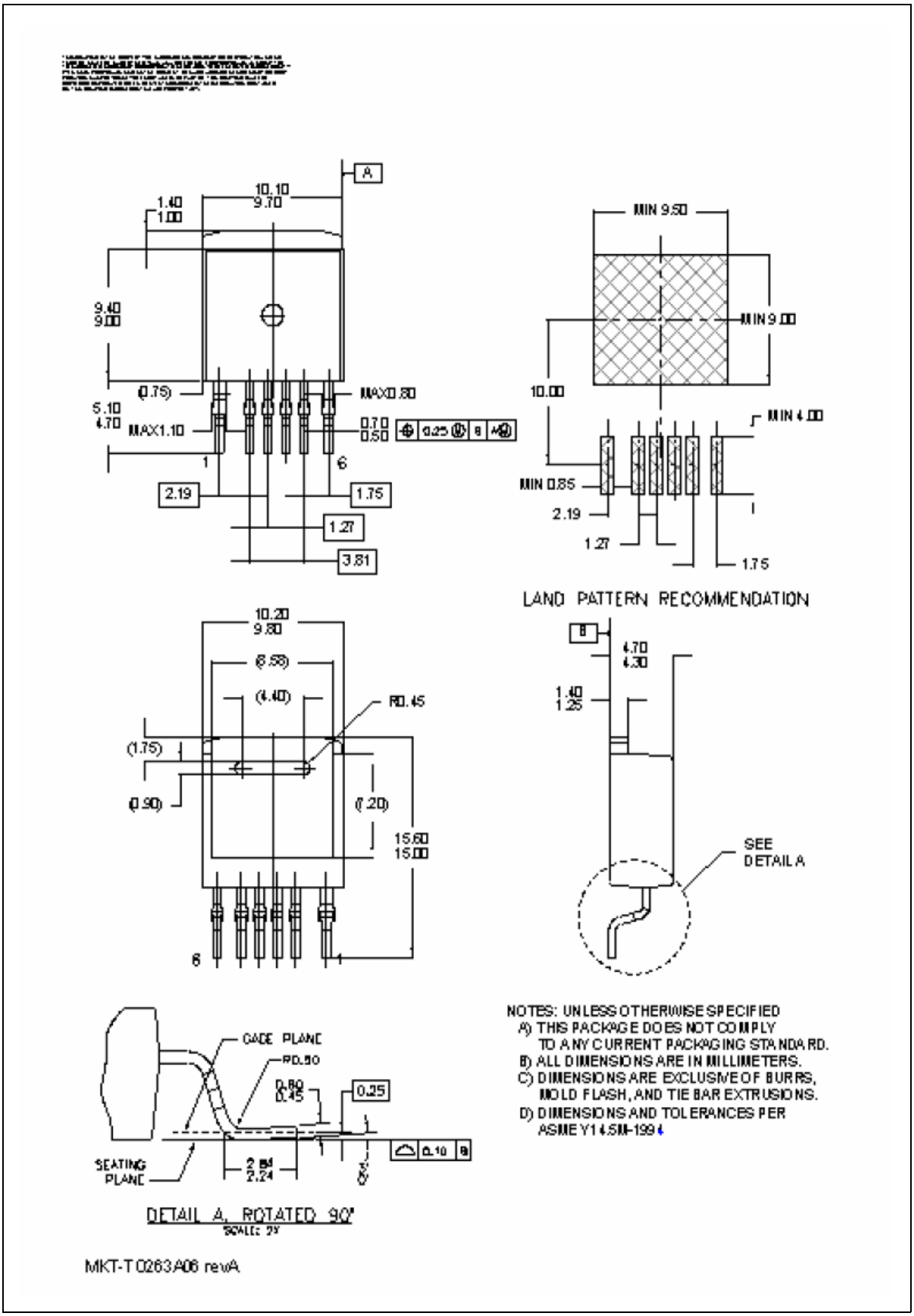
A
10.10
9.70
1.40
1.00
9.40
9.00
(0.75)
MAX0.80
5.10
4.70
MAX1.10
0.70
0.50
0.25 B A
1
6
2.19
1.75
1.27
3.81
MIN 9.50
MIN 9.00
10.00
MIN 4.00
MIN 0.85
2.19
1.27
1.75
LAND PATTERN RECOMMENDATION
10.20
9.80
(6.58)
(4.40)
R0.45
(1.75)
(0.90)
(7.20)
15.60
15.00
6
B
4.70
4.30
1.40
1.25
SEE
DETAIL A
GAGE PLANE
R0.50
0.80
0.45
0.25
0.10 B
SEATING
PLANE
2.24
DETAIL A, ROTATED 90°
SCALE: 2X
NOTES: UNLESS OTHERWISE SPECIFIED
A) THIS PACKAGE DOES NOT COMPLY
TO ANY CURRENT PACKAGING STANDARD.
B) ALL DIMENSIONS ARE IN MILLIMETERS.
C) DIMENSIONS ARE EXCLUSIVE OF BURRS,
MOLD FLASH, AND TIE BAR EXTRUSIONS.
D) DIMENSIONS AND TOLERANCES PER
ASME Y14.5M-1994
MKT-TO263A06 revA

FAIRCHILD SEMICONDUCTOR®

TRADEMARKS

The following are registered and unregistered trademarks and service marks Fairchild Semiconductor owns or is authorized to use and is not intended to be an exhaustive list of all such trademarks.

ACEx®
Build it Now™
CorePLUS™
CROSSVOLT™
CTL™
Current Transfer Logic™
EcoSPARK®
FACT Quiet Series™
FACT®
FAST®
FastvCore™
FPS™
FRFET®
Global Power Resource℠
Green FPS™
Green FPS™ e-Series™
GTO™
i-Lo™
IntelliMAX™
ISOPLANAR™
MegaBuck™
MICROCOUPLER™
MicroFET™
MicroPak™
Motion-SPM™
OPTOLOGIC®
OPTOPLANAR®
PDP-SPM™
Power220®
Power247®
POWEREDGE®
Power-SPM™
PowerTrench®
Programmable Active Droop™
QFET®
QS™
QT Optoelectronics™
Quiet Series™
RapidConfigure™
SMART START™
SPM®
STEALTH™
SuperFET™
SuperSOT™-3
SuperSOT™-6
SuperSOT™-8
SyncFET™
The Power Franchise®
™
TinyBoost™
TinyBuck™
TinyLogic®
TINYOPTO™
TinyPower™
TinyPWM™
TinyWire™
µSerDes™
UHC®
UniFET™
VCX™

DISCLAIMER

FAIRCHILD SEMICONDUCTOR RESERVES THE RIGHT TO MAKE CHANGES WITHOUT FURTHER NOTICE TO ANY PRODUCTS HEREIN TO IMPROVE RELIABILITY, FUNCTION, OR DESIGN. FAIRCHILD DOES NOT ASSUME ANY LIABILITY ARISING OUT OF THE APPLICATION OR USE OF ANY PRODUCT OR CIRCUIT DESCRIBED HEREIN; NEITHER DOES IT CONVEY ANY LICENSE UNDER ITS PATENT RIGHTS, NOR THE RIGHTS OF OTHERS. THESE SPECIFICATIONS DO NOT EXPAND THE TERMS OF FAIRCHILD'S WORLDWIDE TERMS AND CONDITIONS, SPECIFICALLY THE WARRANTY THEREIN, WHICH COVERS THESE PRODUCTS.

LIFE SUPPORT POLICY

FAIRCHILD'S PRODUCTS ARE NOT AUTHORIZED FOR USE AS CRITICAL COMPONENTS IN LIFE SUPPORT DEVICES OR SYSTEMS WITHOUT THE EXPRESS WRITTEN APPROVAL OF FAIRCHILD SEMICONDUCTOR CORPORATION.

As used herein:

1. Life support devices or systems are devices or systems which, (a) are intended for surgical implant into the body or (b) support or sustain life, and (c) whose failure to perform when properly used in accordance with instructions for use provided in the labeling, can be reasonably expected to result in a significant injury of the user.
2. A critical component in any component of a life support, device, or system whose failure to perform can be reasonably expected to cause the failure of the life support device or system, or to affect its safety or effectiveness.

PRODUCT STATUS DEFINITIONS

Definition of Terms

Datasheet Identification	Product Status	Definition
Advance Information	Formative or In Design	This datasheet contains the design specifications for product development. Specifications may change in any manner without notice.
Preliminary	First Production	This datasheet contains preliminary data; supplementary data will be published at a later date. Fairchild Semiconductor reserves the right to make changes at any time without notice to improve design.
No Identification Needed	Full Production	This datasheet contains final specifications. Fairchild Semiconductor reserves the right to make changes at any time without notice to improve design.
Obsolete	Not In Production	This datasheet contains specifications on a product that has been discontinued by Fairchild Semiconductor. The datasheet is printed for reference information only.

Rev. I29