MQ307A CO GAS SENSOR

The MQ307A is a tin dioxide semiconductor gas sensor which has an excellent performance in CO detection. Using a mini-bead type sensing element with a periodic temperature change operation method, high sensitivity, selectively, small effect from humidity and other remarkable characteristics have been achieved. The MQ307A realizes the development of reliable CO detection devices.

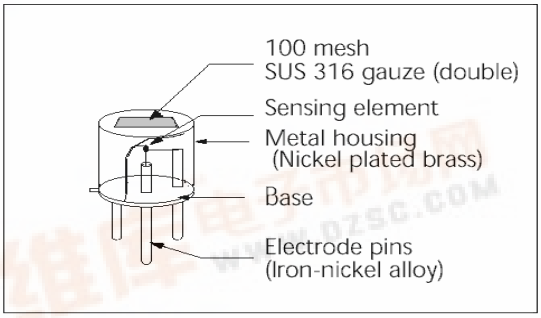

Fig 1a. Configuration

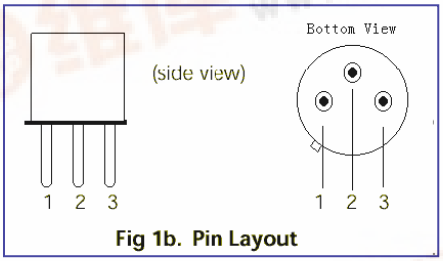

Fig 1b. Pin Layout

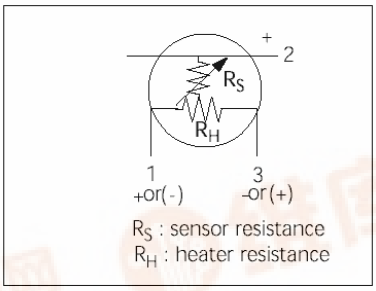

Fig 1c. Equivalent circuit

Structure and Dimensions:

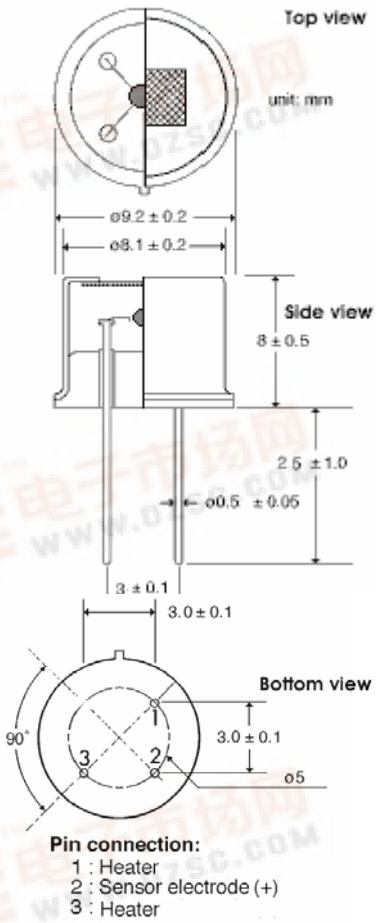

Structure

Gas sensitive semiconductor material is a mini bead type and a heater coil and electrode wire are embedded in the element. The sensing element is installed in the metal housing which uses double stainless steel mesh (100mesh) in the path of gas flow.

Operating conditions

When the sensor is operated with high/low periodic operation (Fig 2), sensor signal changes according to the temperature dependency characteristics. By detecting the sensor signal at sufficient timings (at a high temperature for methane and at a low temperature for CO), selective detection of both methane and CO has been achieved. Fig 3 shows the standard operation circuit and Fig 4 shows the sensitivity characteristics of the MQ307A at low temperature.

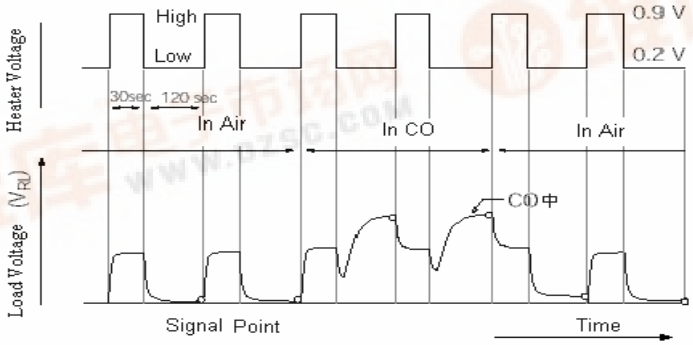

Figure 2 MQ307A: Operating Conditions and Output Signal

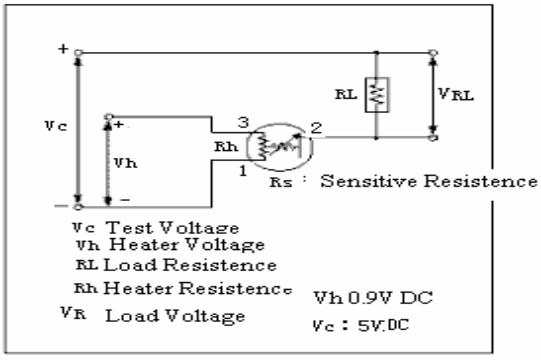

Figure 3 : Standard Testing Circuit

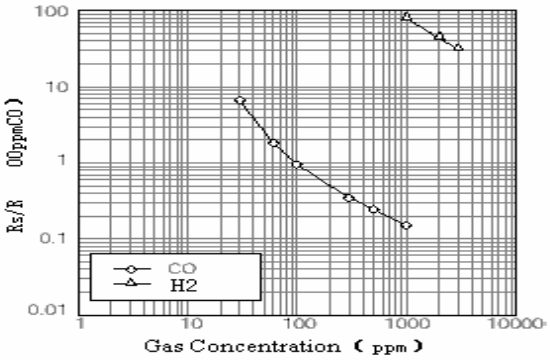

Figure 4 Sensitivity Characteristic

A. Standard Working Terms

Symbol	Parameter	Technical Terms	Remarks
VH(H)	Heater Voltage（High）	0.90V ± 0.10V	AC or DC
VH(L)	Heater Voltage（Low）	0.2 V± 5%	DC (polarity is important)
V_C	Circuit Voltage	≤ 6 V	
R_L	Load Resistance	Adjustable(> 1 KΩ)	P S < 10 mW
R_H	Heating Resistance	3.8 Ω ± 0.5 Ω	Room Temperature
TH (H)	Heating Time(High)	30sec ± 5 sec	
TH (L)	Heating Time（Low）	120 sec ± 10sec	
DT (L)	Sampling Time（Low）	< 1 sec	At the ending of Low Voltage heating
I (H)	Heating Current（Low）	≤ 120 mA	VH=0.9V
I (L)	Heating Voltage（Low）	40±5 mW	VH=0.2V
P_S	power	≤10 mW	$P S = (V C - V RL)^2 / R S$
PH	Heating consumption	Less than 100mw	

B.Environment Conditions

Symbol	Parameter	Technical Terms	Remarks
Tao	Using temperature	-20 °C…+50 °C	Recommended Application Ranges
Tas	Storage Temperature	-20 °C …+70 °C	
RH	Relative Humidity	≤ 95% RH	
(O2)	Oxygen Concentration	21%±1%(Standard terms) O_2 Influence sensor performance	Not less than 18%

C. Sensitivity Characteristics

Model	MQ-307A		
Symbol	**Parameter**	**Technical terms**	**Remarks**
R_s	Sensitive Resistance	(20kΩto 200 kΩ)	In 200 ppm CO
□(30-100)	Resistance Proportion	1.05 to 2.1	Rs (30 ppmCO) / Rs (100 ppmCO)
□(100-300)	Resistance Proportion	0.75 to 1.2	Rs(300 ppmCO) /Rs(100ppmCO)

Standard Testing Terms: Temperature : 20 ° C ± 2 ° C V C : 5.0 V □1%
Humidity: 65%± 5% V H : 0.9 V ± 1% R L : 50K Ω ±5%
Preheating Time：more than 48 hours