查询LT1474供应商 捷多邦，专业PCB打样工厂，24小时加急出货

Dot Matrix LED Unit for Outdoor Use LT1474M(Lamp Type,Water-proof Type)

■ Features

- No. of dots : 16×16dots
- Outline dimensions : 320×320mm
- Dot size : 18×18mm(Using oval lamp)
- Dot pitch : 20.0mm
- Radiation color : Yellow-green+Red(High-luminosity)dichromatic type
- Driving method : 1/16 duty dynamic drive

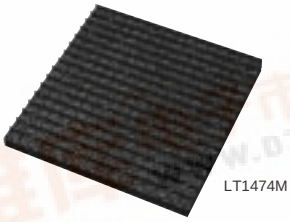

LT1474M

■ Absolute Maximum Ratings

(Ta=25˚C)

Parameter	Symbol	Rating	Unit
Supply voltage for IC	V_{CC}	-0.3 to +6.0	V
Supply voltage for LED	V_{LED}	-0.3 to +9.5	V
Input voltage*1	V_I	-0.3 to V_{CC}+0.3	V
Turn-on time	t_{ON}	1	ms
Operating temperature	T_{opr}	-20 to +75	˚C
Storage temperature	T_{stg}	-25 to +100	˚C
Power dissipation	P	176	W

*1 V_I<Vcc at Vcc≤5

■ Electrical Characteristics

(V_{CC}=5V,V_{LED}=9V,Ta=25˚C)

Parameter	Symbol	MIN.	TYP.	MAX.	Unit
Supply voltage for IC	L_{CC}	4.75	5.0	5.25	V
Supply voltage for LED	V_{LED}	8.75	9.0	9.25	V
IC current dissipation*1	I_{CC}	—	500	750	mA
LED current dissipation*1	I_{LED}	—	12	18	A
Input voltage	V_{IH}	3.5	—	—	V
	V_{IL}	—	—	1.5	V
Input current	I_{IH}	—	—	0.1	μA
	I_{IL}	—	—	0.12	mA
Clock frequency	f_{CLK}	—	—	10	MHz

*1 Under the condition that dichromatic all dots are lit.

■ Optical Characteristics

(V_{CC}=5V,V_{LED}=9V,Ta=25˚C)

Parameter		Symbol	TYP.	Unit
Luminance	Red	Lv	1 900	cd/m²
	Yellow-green		1 500	
Viewing angle[Horizontal(Red/Yellow-green)]		2θ1/2	60/70	°
Peak emission wavelength	Red	λp	660	nm
	Yellow-green		565	

■ Timing Chart

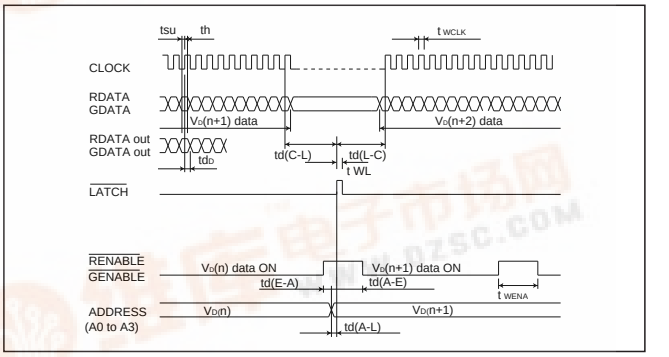

■ Terminal Functions

Connector	Symbol	Function
Power supply (CN1)	V_{LED}	Supply voltage for LED(+9V)
	V_{CC}	Supply voltage for IC(+5V)
	GND1	Ground for IC
	GND2	Ground for LED
Input signal (CN2)	A0 to A3	Address specification signal for row driver
	RDATA	Serial data input for red (H=ON, L=OFF)
	GDATA	Serial data input for yellow-green (H=ON, L=OFF)
	$\overline{\text{LATCH}}$	Latch signal of display data
	$\overline{\text{RENABLE}}$ $\overline{\text{GENABLE}}$	Controls ON/OFF of LED (H: LED OFF)
	CLOCK	Clock signal for data transmission in the shift-register.(L→H: serial data is shifted.)
	GND1	Ground for signal
Output signal (CN3)	A0 to A3	Buffered input signal
	RDATA	Input signal generated through 16-bit shift register or buffer
	GDATA	Input signal generated through 16-bit shift register or buffer
	$\overline{\text{LATCH}}$	Buffered input signal
	$\overline{\text{RENABLE}}$ $\overline{\text{GENABLE}}$	Buffered input signal
	CLOCK	Buffered input signal
	GND1	Ground for signal(Connected to ground for IC)

Each signal is used as input signal for next unit.
* As for the terminal number, refer to the outline dimensions.

■ Block Diagram

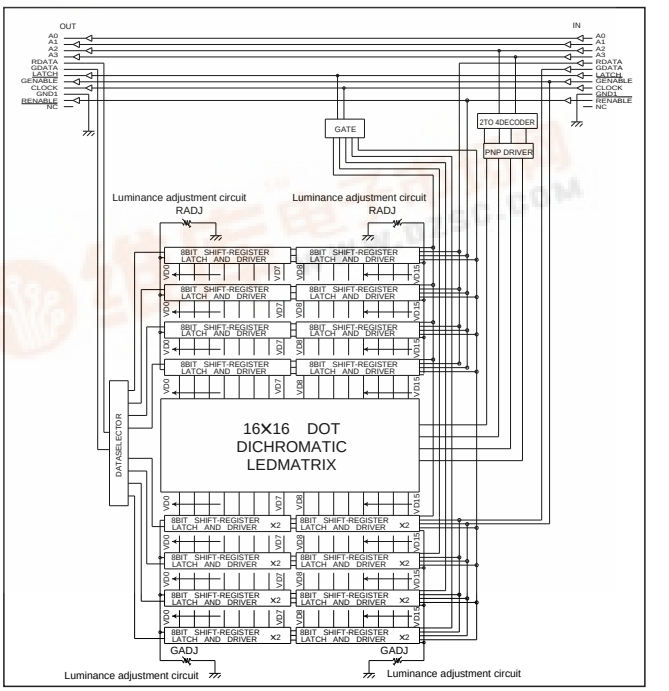

(Notice) ... confirmation by device specification sheets, SHARP takes no responsibility for any defects that may occur in equipment using any SHARP ... s, data books, etc. Contact SHARP in order to obtain the latest device specification sheets before using any SHARP device.

Dot Matrix LED Unit Outline Dimensions(Unit:mm)

13

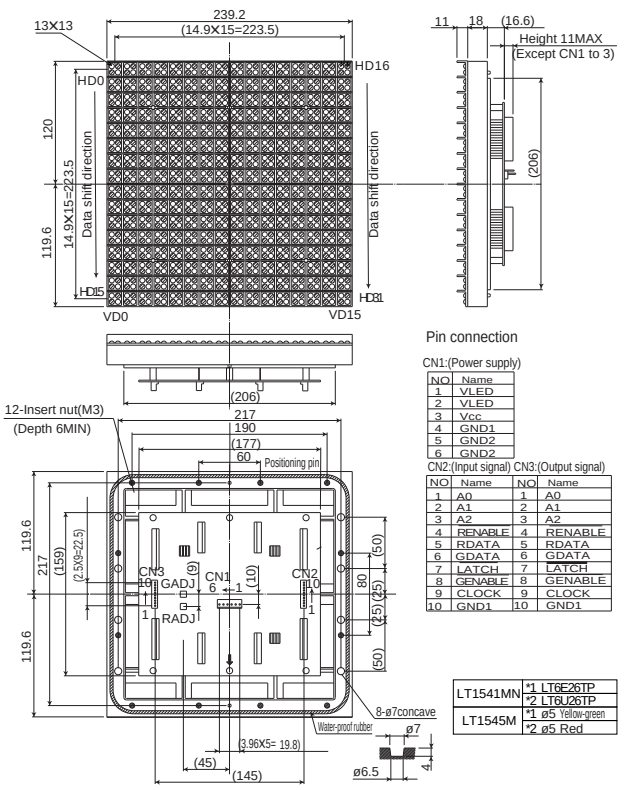

Pin connection

CN1:(Power supply)

NO	Name
1	VLED
2	VLED
3	Vcc
4	GND1
5	GND2
6	GND2

CN2:(Input signal) CN3:(Output signal)

NO	Name	NO	Name
1	A0	1	A0
2	A1	2	A1
3	A2	3	A2
4	RENABLE	4	RENABLE
5	RDATA	5	RDATA
6	GDATA	6	GDATA
7	LATCH	7	LATCH
8	GENABLE	8	GENABLE
9	CLOCK	9	CLOCK
10	GND1	10	GND1

LT1541MN	*1 LT6E26TP
	*2 LT6U26TP
LT1545M	*1 ø5 Yellow-green
	*2 ø5 Red

LT1541MN/LT1545M

14

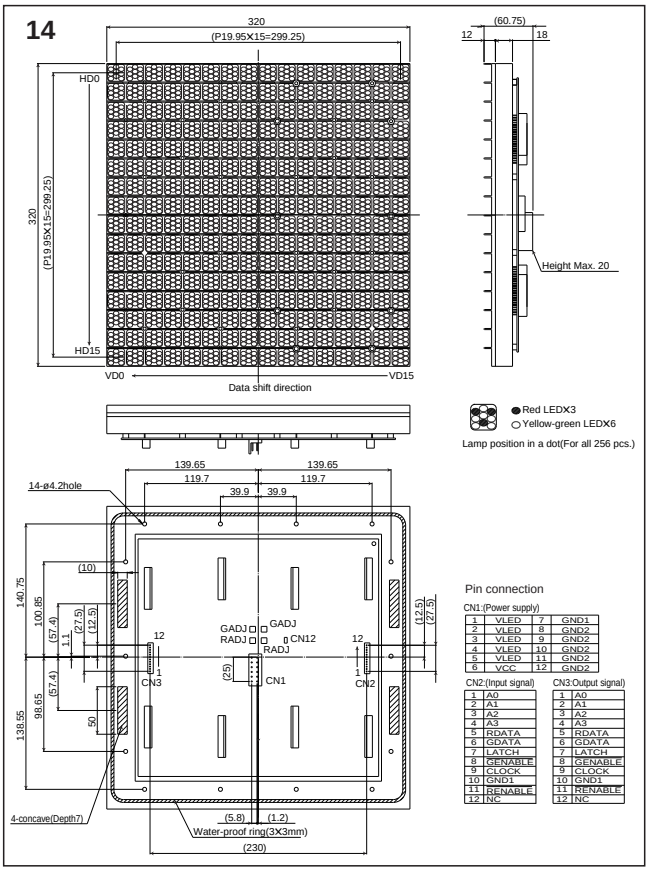

Pin connection

CN1:(Power supply)

1	VLED	7	GND1
2	VLED	8	GND2
3	VLED	9	GND2
4	VLED	10	GND2
5	VLED	11	GND2
6	VCC	12	GND2

CN2:(Input signal)

1	A0
2	A1
3	A2
4	A3
5	RDATA
6	GDATA
7	LATCH
8	GENABLE
9	CLOCK
10	GND1
11	RENABLE
12	NC

CN3:Output signal)

1	A0
2	A1
3	A2
4	A3
5	RDATA
6	GDATA
7	LATCH
8	GENABLE
9	CLOCK
10	GND1
11	RENABLE
12	NC

LT1474M

15

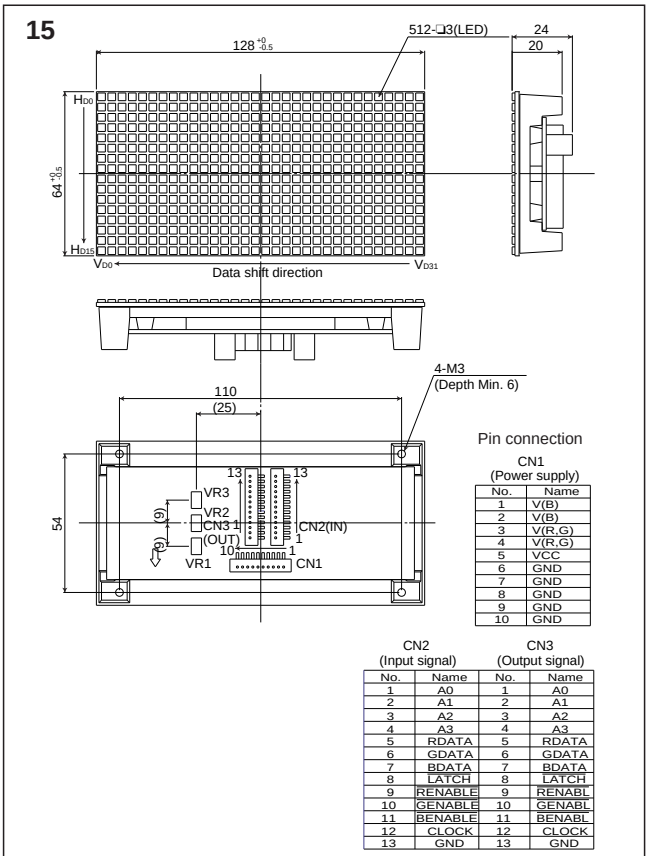

Pin connection

CN1
(Power supply)

No.	Name
1	V(B)
2	V(B)
3	V(R,G)
4	V(R,G)
5	VCC
6	GND
7	GND
8	GND
9	GND
10	GND

CN2 (Input signal) No.	Name	CN3 (Output signal) No.	Name
1	A0	1	A0
2	A1	2	A1
3	A2	3	A2
4	A3	4	A3
5	RDATA	5	RDATA
6	GDATA	6	GDATA
7	BDATA	7	BDATA
8	LATCH	8	LATCH
9	RENABLE	9	RENABL
10	GENABLE	10	GENABL
11	BENABLE	11	BENABL
12	CLOCK	12	CLOCK
13	GND	13	GND

LT1550W

16

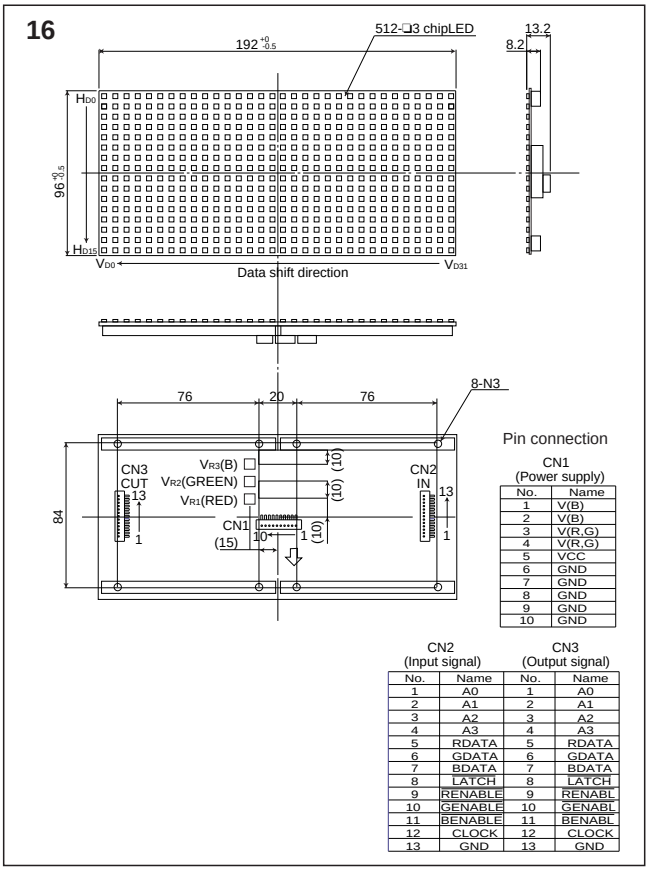

Pin connection

CN1
(Power supply)

No.	Name
1	V(B)
2	V(B)
3	V(R,G)
4	V(R,G)
5	VCC
6	GND
7	GND
8	GND
9	GND
10	GND

CN2 (Input signal) No.	Name	CN3 (Output signal) No.	Name
1	A0	1	A0
2	A1	2	A1
3	A2	3	A2
4	A3	4	A3
5	RDATA	5	RDATA
6	GDATA	6	GDATA
7	BDATA	7	BDATA
8	LATCH	8	LATCH
9	RENABLE	9	RENABL
10	GENABLE	10	GENABL
11	BENABLE	11	BENABL
12	CLOCK	12	CLOCK
13	GND	13	GND

LT1560W

(Notice) ● In the absence of confirmation by device specification sheets, SHARP takes no responsibility for any defects that may occur in equipment using any SHARP
s, data books, etc. Contact SHARP in order to obtain the latest device specification sheets before using any SHARP device.