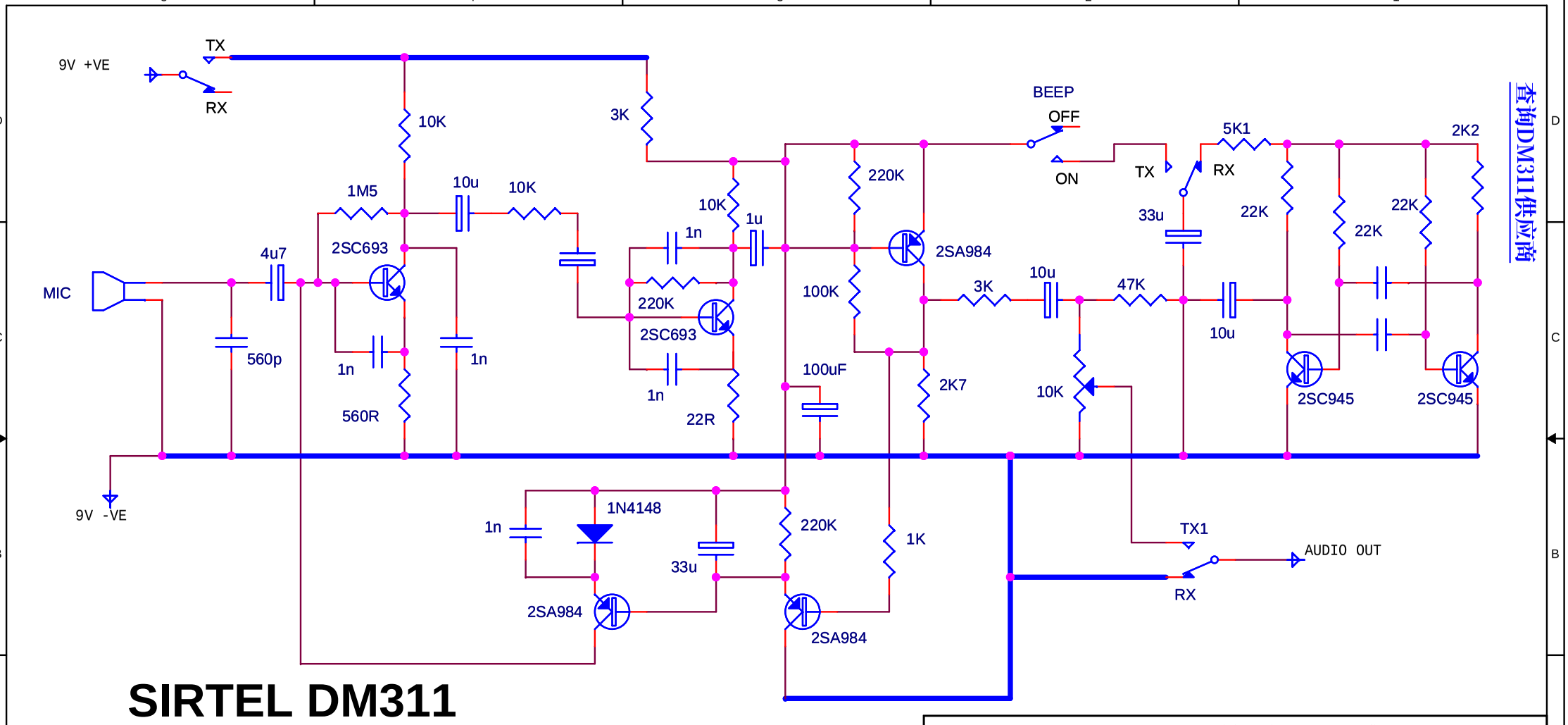


# SIRTEL DM311

查询DM311供应商

| | | |
|---|---|---|
| DRAWING BY: Rick Jackson Euro Radio Co | | |
| Title SIRTEL DM311 MICROPHONES | | |
| Size | Document Number SIRTEL_DM311.SCH | Rev A1 |
| Date: Sunday, November 12, 2006 | Sheet 1 of 1 | |