NIKO-SEM

UNIVERSAL SWITCHING BUFFER

N5100V
N5100P

GENERAL DESCRIPTION

The N5100 is a universal switching buffer, specifically designed to drive the power MOSFET for the various switching topology applications, it allows to receive dual input signals from a push-pull controller, and outputs total 4 driving outputs for directly driving dual N-channel and dual P-channel MOSFETs.
The N5100 features a level shift function that can shift the output potential to be different with the input potential while the device connects to different voltage source.
The N5100 features a fixed delay time control function that can transfer dual input signals from the push-pull controller become to 4 driving outputs, and successful to drive a full bridge structure power supply.
The N5100 provides 4 high current totem pole outputs that allow to be used on the multiple switching control application with single universal switching buffer.

FEATURES

- ▲ 4.5V~13.2V operating voltage
- ▲ ZVS control
- ▲ Level shift for different output potential
- ▲ Full bridge operating with a push- pull controller
- ▲ 4 high current totem pole outputs
- ▲ High efficiency
- ▲ Compatible with W98M4427 (dual outputs application)
- ▲ Low cost solution
- ▲ SOP-8 and DIP-8 Package

APPLICATIONS

- ▲ Full bridge topology
- ▲ Half bridge topology
- ▲ Push-pull topology

BLOCK DIAGRAM

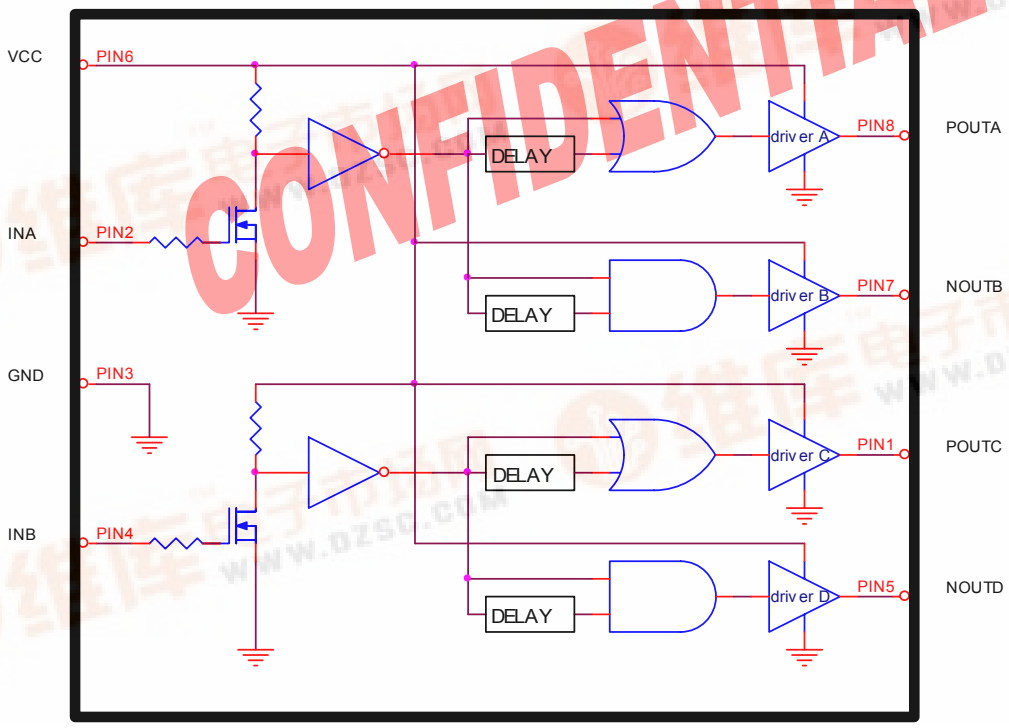

ABSOLUTE MAXIMUM RATINGS

PARAMETER	SYMBOL	LIMITS	UNITS
Power Supply Voltage	Vcc	16	V
Input Voltage	INA,INB	-5.0 ~VCC+0.3	V
Power Dissipation at Ta =50℃ , SOP/DIP	PTOT	725	mW
Operating Junction Temperature	Tj	- 40 ~ 150	℃
Storage Temperature	TSTG	- 65 ~ 150	℃
Lead Temperature (Soldering) 10S	TLEAD	300	℃

THERMAL DATA

PARAMETER	SYMBOL	SOP- 8	DIP-8	UNIT
Thermal Resistance Junction to Ambient	θja	53	45	℃/W
Thermal Resistance Junction to Case	θjc	23	15	℃/W

ELECTRICAL SPECIFICATIONS (- 40℃≦Tc≦85℃, unless otherwise specified)

PARAMETER	SYMBOL	CONDITIONS	MIN	TYP	MAX	UNITS
INPUT SECTION						
Logic 1 input voltage	VIH		2.4			V
Logic 0 input voltage	VIL				0.5	V
Input Current	IIN	0≦VIN≦VCC	-1		1	uA
OUTPUT SECTION						
High Output Voltage	VOH		Vcc-0.075			V
Low Output Voltage	VOL				0.05	V
Output Resistance	RP	current source		10		Ω
Output Resistance	RN	current sink		4		Ω
Rise Time	Tr	VCC=12V,Co=1000pF		35		nS
Fall Time	Tf	VCC=12V,Co=1000pF		20		nS
Propagation Delay to Turn On	Tp	No load		12	25	nS
Delay Time Control	Tdelay	No load	250	350	450	nS
POWER SUPPLY SECTION						
Supply Voltage	VCC		4.5		13.2	V
Supply Current	Icc	No load		2.7	4	mA

OPERATING WAVEFORM

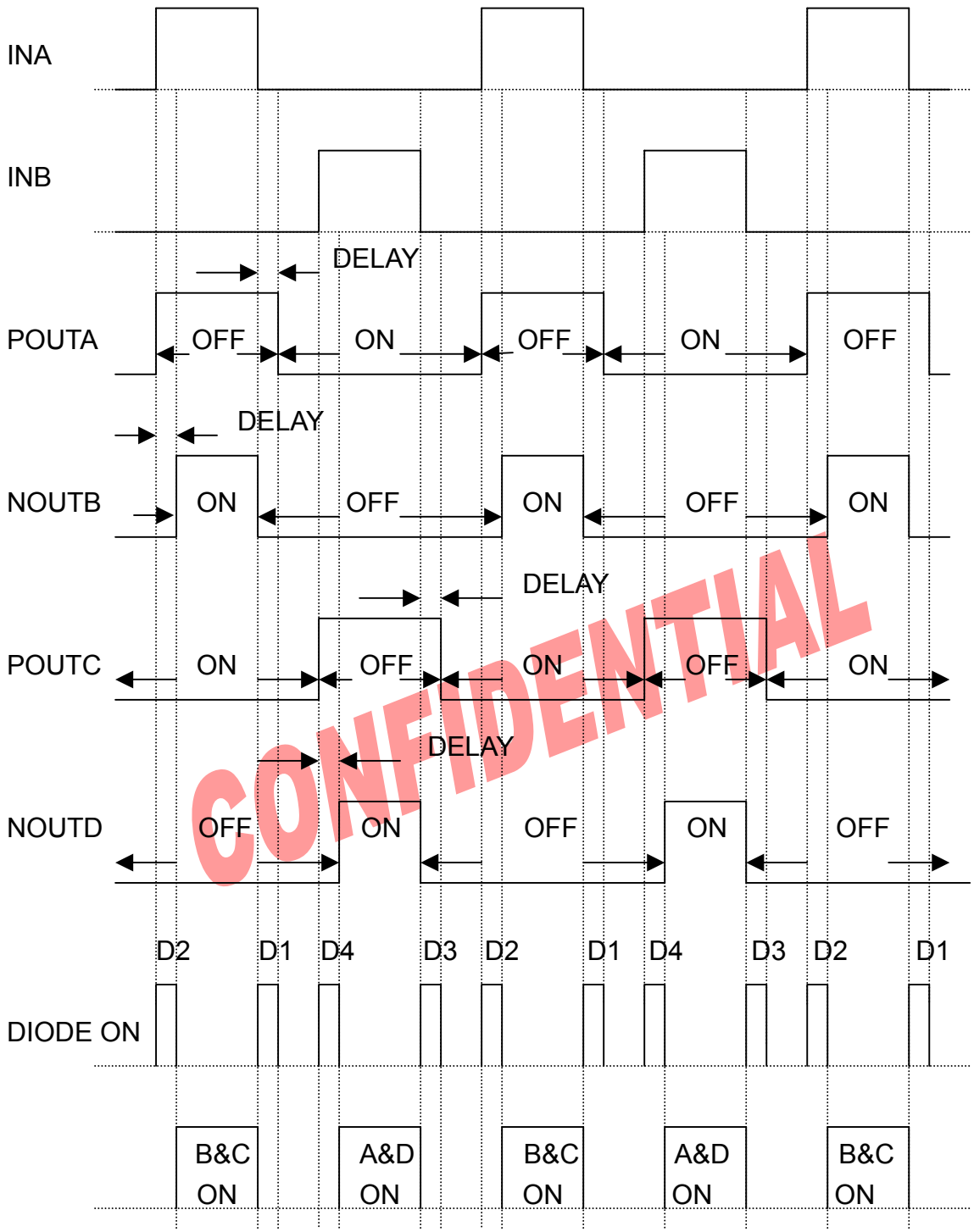

TYPICAL CHARACTERISTICS

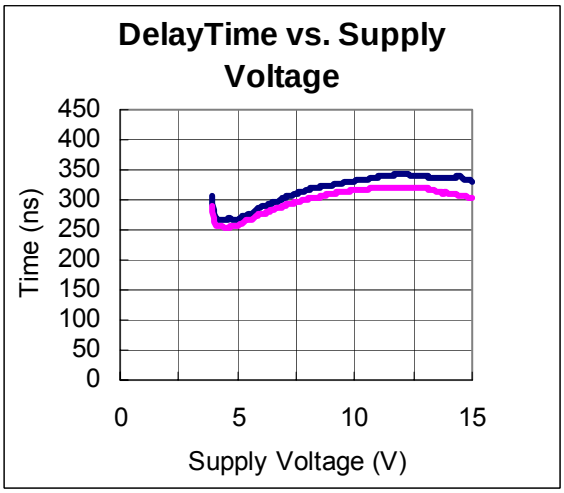

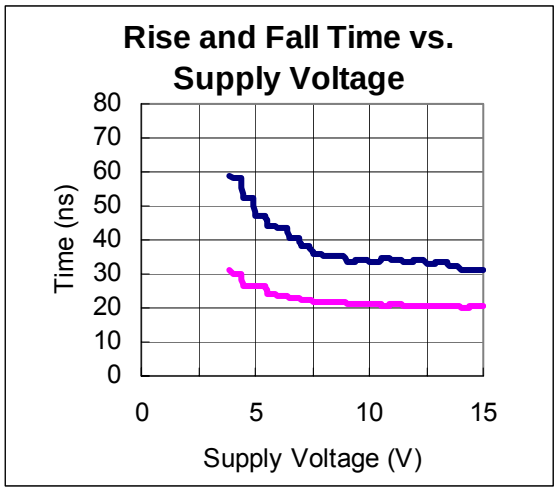

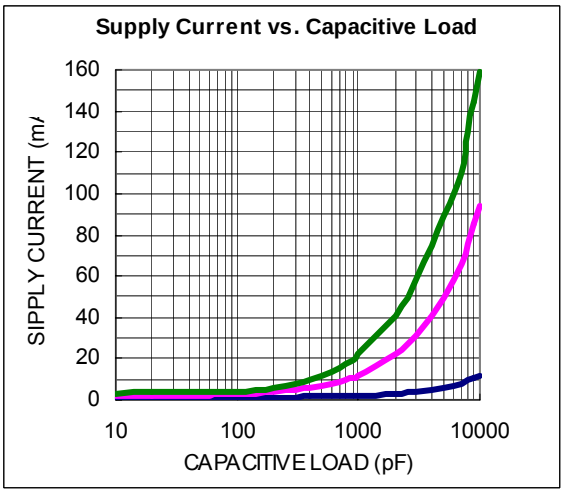

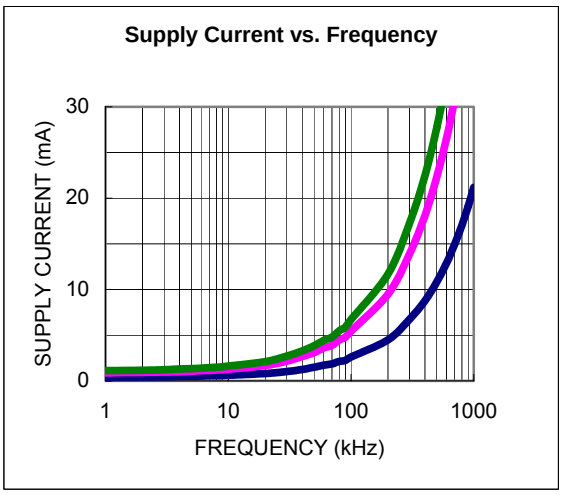

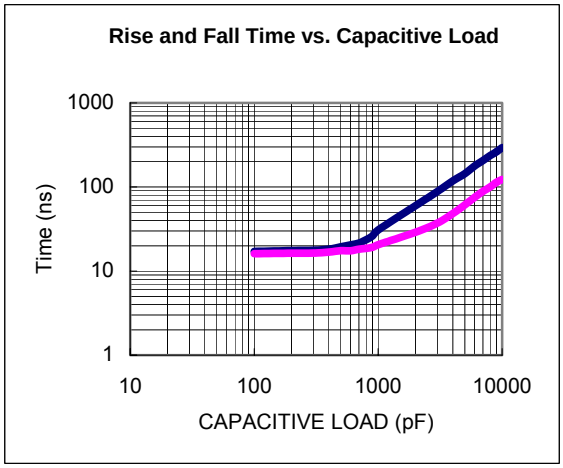

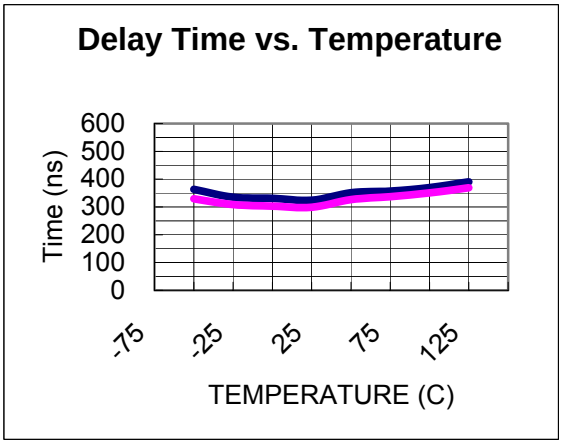

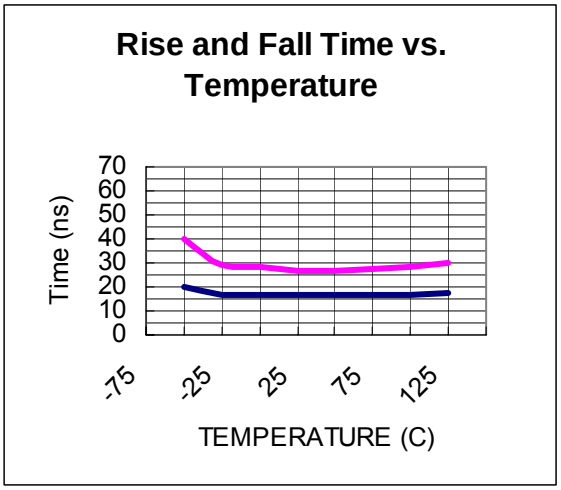
Rise and Fall Time vs. Temperature
Time (ns)
70
60
50
40
30
20
10
0
-75
-25
25
75
125
TEMPERATURE (C)

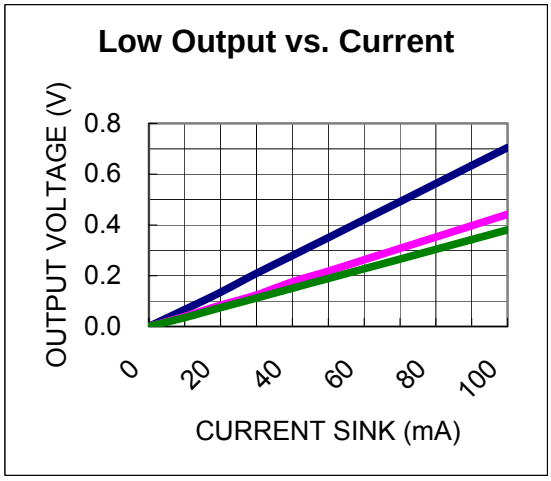
Low Output vs. Current
OUTPUT VOLTAGE (V)
0.8
0.6
0.4
0.2
0.0
0
20
40
60
80
100
CURRENT SINK (mA)

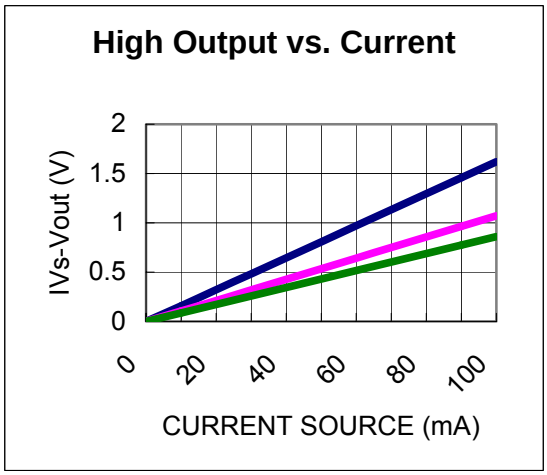
High Output vs. Current
IVs-Vout (V)
2
1.5
1
0.5
0
0
20
40
60
80
100
CURRENT SOURCE (mA)

PIN CONFIGURATIONS

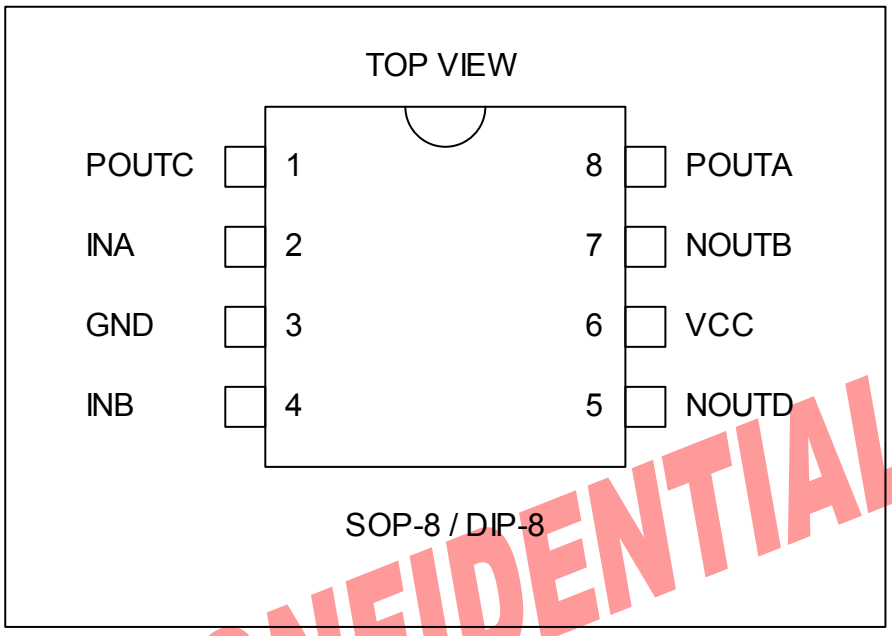

PIN FUNCTIONS

NO	FUNCTION	DESCRIPTION
1	POUTC	The output of driver C that is driving the external P-channel MOSFET
2	INA	Control input A; TTL/CMOS compatible input
3	GND	GND
4	INB	Control input B; TTL/CMOS compatible input
5	NOUTD	The output of driver D that is driving the external N-channel MOSFET
6	VCC	Supply voltage input
7	NOUTB	The output of driver B that is driving the external N-channel MOSFET
8	POUTA	The output of driver A that is driving the external P-channel MOSFET

DEVICE SELECTION GUIDE

DIP-8	SOP-8
N5100P	N5100V

SOP-8 (D) MECHANICAL DATA

Dimension	mm			Dimension	mm		
	Min.	Typ.	Max.		Min.	Typ.	Max.
A	4.8		5.0	H	0.4		1.27
B	3.8		4.0	I	0.18		0.25
C	5.8		6.2	J		0.22	
D	0.33		0.51	K	0°		8°
E		1.27		L			
F			1.75	M			
G	0.1		0.3	N			

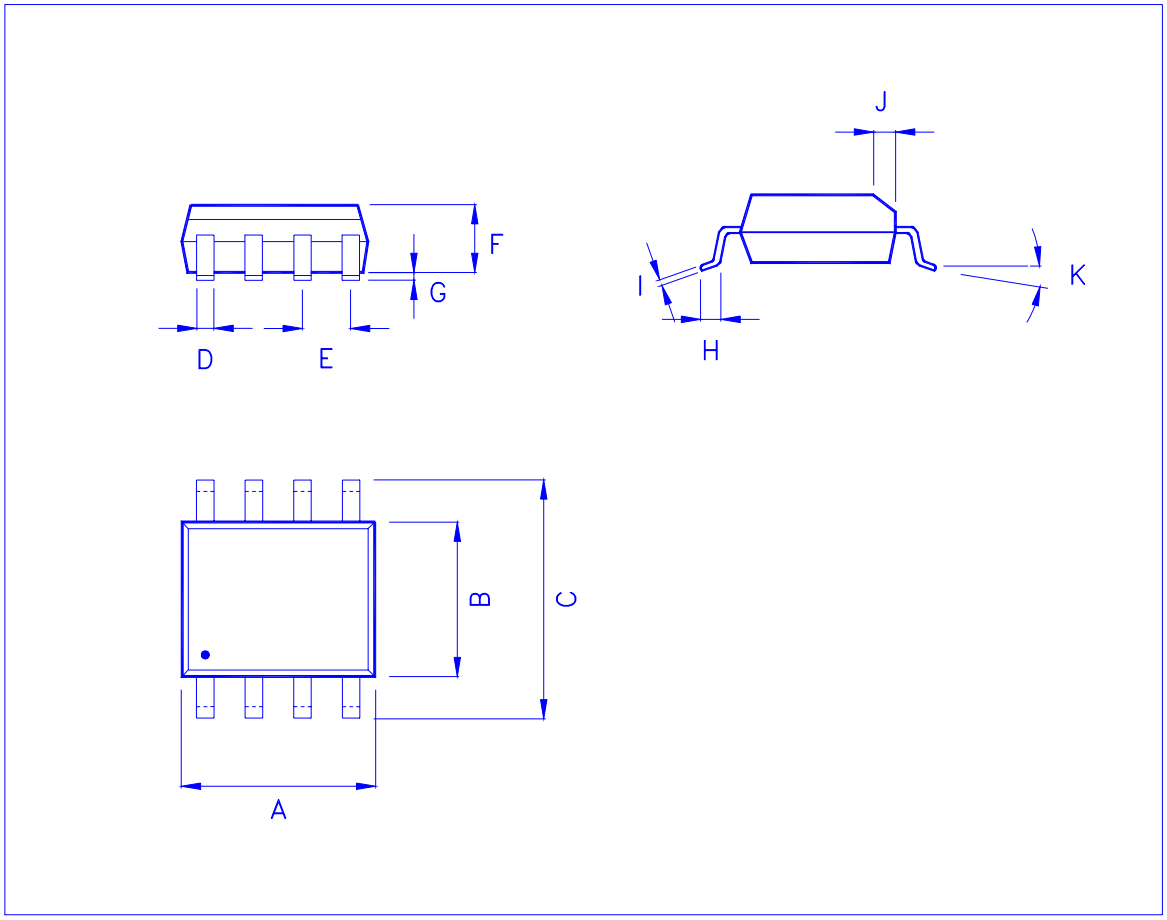

DIP-8 MECHANICAL DATA

Dimension	mm			Dimension	mm		
	Min.	Typ.	Max.		Min.	Typ.	Max.
A	8.8		9.6	H	7.95		9.75
B	6.2		7.0	I			
C	0.35	0.45	0.55	J			
D		2.54		K			
E	0.5		0.8	L			
F	3.05	3.28	3.56	M			
G	7.48	7.62	8.13	N